Builder's Hardware for aluminium windows and patio doors

Tilt-turn and side hung fittings

Turn handles

Parallel slide and tilt fittings

Slide-fold fittings

Lift-slide fittings

Horizontal and vertical pivot fittings

Fan-light openers

Ventilators for windows

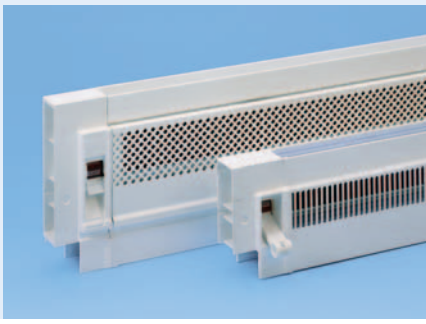

M

Edition 09.2010


AGQS

CERTIFICAT

La société AGQS Qualitäts- und Umweltmanagement GmbH confirme que l'enterprise

Gretsch-Unitas GmbH Baubeschläge
Johann-Maus-Straße 3
D-71254 Ditzingen

a introduit et maintient, pour le domaine d'application

conception, fabrication et vente de pour fenêtres et portes en bois, PVC négoce de produits accessoires

un système de management de la qualité dans un rapport, a confirmé que ce systèm remplit les exigences énoncées dans la n

DIN EN ISO 9001:2008.

Remscheid, 2009-04-29

QMS-TGA-ZM-01-93-0

Audit	QM-035-R4
Certificat	QM-035-95-0
Valide jusqu'au	2012-04-3
1° certification	1995-01-2

AGQS

ZERTIFIKAT

Die AGQS Qualitäts- und Umweltmanagement GmbH bestätigt, dass das Unternehmen

Gretsch-Unitas GmbH Baubeschläge
Johann-Maus-Straße 3
D-71254 Ditzingen

für den Geltungsbereich

und Vertrieb von Baubeschlägen
ster und Türen aus Holz,
ium, Handel mit

system eingeführt hat und aufrecht
tiert in einem Bericht, hat bestätigt,
ystem die Anforderungen der folgenden

08

Telefon +49 2191 438 24
Telefax +49 2191 438 26
www.agqs.de
email@agqs.de

AGQS

CERTIFICATE

The AGQS Qualitäts- und Umweltmanagement GmbH hereby certifies, that the company

Gretsch-Unitas GmbH Baubeschläge
Johann-Maus-Straße 3
D-71254 Ditzingen

for the scope

design, manufacturing and sales of fittings, locks and locking cylinders for wooden, PVC and aluminium windows and doors, trading of accessory products

has implemented and maintains a quality management system. An audit, documented in a report, has verified that this management system fulfills the requirements of the following standard:

DIN EN ISO 9001:2008

Remscheid, 2009-04-29

QMS-TGA-ZM-01-93-00

Audit	QM-035-R40
Certificate	QM-035-95-04
Validity	2012-04-30
1st certification	1995-01-26

AGQS Qualitäts- und Umweltmanagement GmbH
Elberfelder Straße 77
D-42853 Remscheid

Telefon +49 2191 438 24
Telefax +49 2191 438 26
www.agqs.de
email@agqs.de

Qualité: G.U certifié avec succès

La norme DIN ISO 9001 définit les exigences à la structure et le mode de travail de l'entreprise et de sa gestion de qualité.

En 1995 le comité AGQS e.V. a certifié l'introduction avec succès d'un système de management de qualité conforme à la norme DIN ISO 9001 dans la Société Gretsch-Unitas GmbH Baubeschläge.
La fabrication de produits de qualité est un but permanent pour G.U. Le certificat confirme que la coopération interne de la Société – du développement des produits jusqu'à la distribution et le service pour les clients – correspond également à ce but.

Qualität: G.U erfolgreich zertifiziert

DIN ISO 9001 definiert die Anforderungen an die Struktur und Arbeitsweise des Unternehmens und seines Qualitätsmanagements.

1995 bescheinigte die AGQS e.V. der Gretsch-Unitas GmbH Baubeschläge die erfolgreiche Einführung eines Qualitätssicherungssystems entsprechend DIN ISO 9001.
Die Herstellung von Qualitätsprodukten ist für G.U ein beständiges Anliegen. Die Zertifizierung bestätigt, dass auch die betriebsinternen Abläufe – von der Entwicklung bis zum Vertrieb und Kundenservice – mit diesem Anliegen übereinstimmen.

Quality: G.U successfully certified

DIN ISO 9001 defines the requirements to structure and working methods of the enterprise and its quality management.
In 1995 the committee AGQS e.V. has certified the successful introduction of a quality management system according to DIN ISO 9001 in the company Gretsch-Unitas GmbH Baubeschläge.
The production of quality hardware is a permanent concern for G.U. The certificate confirms that the internal cooperation of the company – from product development to distribution and customer's service – also corresponds to this concern.

Tilt-Turn Fitting System UNI-JET

Fittings for single and double sash windows and patio doors made of timber, PVC and aluminium – suitable for manual and automatised hardware assembly in any window fabrication facility.

- Comprehensive product range:
  Tilt-turn, tilt only, first tilt, and side hung fittings, also for round arch head and oblique angle head windows; all available in standard version or in tested /untested security grades
- Advantages:
  – automatic mushroom locking pins
  – central locking mechanism from standard (basic) security up to WK 2
  – tilt-turn stays with integral slit ventilation
- All fittings with surface sealing ferGUard*silver
- Sash components with clip connection

Technical details, fitting variants			
Fitting variants	Sash width mm	Sash height mm	Sash weight kg
Timber or PVC			
UNI-JET M, UNI-JET S	280-1600	350-2450	up to 130
UNI-JET D	280-1600	350-2450	up to 100
UNI-JET S-CONTURA	280-1600	350-2350	up to 130
UNI-JET S-CONCEALED	400-1400	350-2450	up to 130
Aluminium			
JET AK 8	355-1700	500-2400	up to 130
UNI-JET C	280-1600	350-2450	80 / 130 optional
UNI-JET D	280-1600	350-2450	up to 100

Parallel Slide and Tilt Fittings

Fittings for parallel slide and tilt units with 2 - 4 sashes.

- One handle operation, stays with forced control (mZ)
- Up to 200 kg sash weight without additional runner
- Designed for sash rebate widths up to 2000 mm (from SRW 1.850 mm with 3rd stay)
- Sashes in tilt position secured against being pushed open
- Multi-level security concept
- Wrong operation safety device

Technical details, fitting variants			
Fitting variants	Sash width mm	Sash height mm	Sash weight kg
Timber and PVC			
G.U-966/200 mZ	720-2000	820-2370	up to 200
G.U-966/150 mZ	720-1600	820-2370	up to 150
G.U-966/150 oZ	640-1600	700-2350	up to 130
G.U-90 oZ	640-1600	700-2350	up to 90
Aluminium			
G.U-968/200 mZ	740-2000	895-2400	up to 200
G.U-968/150 mZ	740-1600	895-2400	up to 150
G.U-968/150 oZ	600-1600	730-2400	up to 130
G.U-90 oZ	600-1600	730-2400	up to 90

Lift-Slide Fitting Range, HS-*Master* and HS-*Master* CONCEALED

Fittings with one handle operation for units with 2 to 6 sashes.

- Extended application range of lift-locking gear for sash heights up to 2.765 mm
- Newly engineered runners allow the sliding sashes to run more smoothly and quietly than ever before
- Security package for all lift-slide units
- **HS slit ventilation module –** convenient room aeration and enhanced burglar protection (WK2-tested)
- HS-*Master* – operating convenience due to motor driven lift and slide
- HS-*Master* CONCEALED – operating convenience due to motor driven lift and slide, plus the extra benefit of sophisticated design : the drive unit is integrated in the frame profile
- All fittings with surface sealing ferGUard*silver
- Threshold G.U-thermostep, G.U-threshold 47, G.U-flatstep, G.U-timberstep
- HS-*Speed Limiter* (mechanical safety component) prevents the sash from accelerating its movement

Technical details, fitting variants			
Fitting variants	Sash width mm	Sash height mm	Sash weight kg
Timber, PVC and aluminium			
HS G.U-934	700-3300	850-2765	up to 300*
HS G.U-937	700-2200	850-2765	up to 150
HS-*Master*	min. SW 950-3300	up to -2765	up to 300
HS-*Master* CONCEALED	min. SW 1200-3300	1840-2765	up to 300

* Special 400 kg / 600 kg variants

Slide-Fold Fittings

Fittings for slide-fold units with 3 - 7 sashes.

- 2-wheel runners, bottom running (G.U-922, G.U-822) or top running (G.U-925, G.U-825)
- Vertical adjustment as well as sash overlap and gasket pressure adjustment on runners, horizontal adjustment on sash hinges
- All fittings with surface sealing ferGUard*silver

Technical details, fitting variants			
Fitting variants	Sash width mm	Sash height mm	Sash weight kg
Timber and PVC			
G.U-922	400-900	850-2450	up to 80
G.U-925	400-900	850-2350	up to 80
Aluminium			
G.U-822	400-1000	730-2400	up to 80
G.U-825	400-1000	730-2400	up to 80

Horizontal and Vertical Pivot Fittings

Fittings for horizontal and vertical pivot windows with peripheral gasket:

- A hardware system which has proven its value for decades; suitable for sash weights up to 300 kg
- Vertical pivot fittings can be pivoted centrally or eccentrically

Technical details, fitting variants			
Fitting variants	Sash width mm	Sash height mm	Sash weight kg
Horizontal pivot fittings – timber			
UNITAS 5 Bo, 7 Bo	576-2950	700-2200	up to 175
UNITAS 10/22°	576-2950	700-2200	up to 300
UNITAS 4 (circular window)	424-2016 Ø		up to 100
FERCO 44 E	576-1450	700-2000	up to 80
FERCO 45 E	576-1450	700-2200	up to 120
Horizontal pivot fittings – PVC			
UNITAS 15, 16	576-2950	700-2200	up to 175
Horizontal pivot fittings – aluminium			
UNITAS 18	580-	600-	up to 175
Vertical pivot fittings			
UNITAS 93 Bo (timber)	782-1600	1250-2350	up to 175
UNITAS 88 (aluminium)	600-	600-	up to 175

DUCO Ventilators
Flap ventilators, rotating drum ventilators and sound-absorbing ventilators

Ventilators manufactured from extruded aluminium profiles for adjustable, energy saving and sound reducing ventilation (available up to sound absorption class 4).

- Thermally broken flap or rotating drum ventilators with sealing lips or finseal brushes
- Controlled via lever, rod or cord
- Max. length of ventilator: 3000 mm
- Installation in the frame or glazing rebate of timber, PVC and aluminium windows
- Tightness against driving rain up to 650 Pa

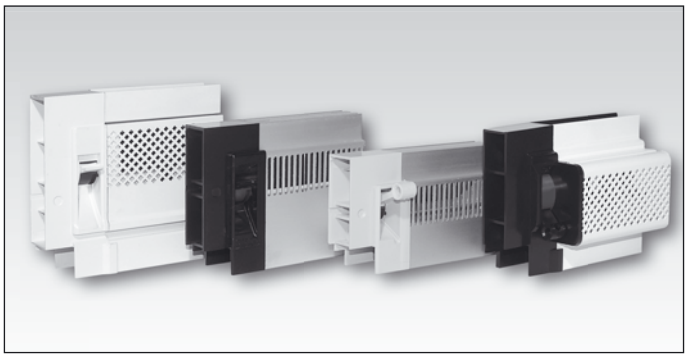

Technical data of ventilators										
Description	G.U - DucoFlat						DucoPlus 60 GF	DucoTon 80 GF	DucoMax	Silenzio 200 Uno
	80 GFO	80 GF	80 BF	100 GFO	100 GF/GFS	100 BF				
Application / Features	Flap ventilators						Flap ventilator	Rotating drum ventilator	Sound absor-bing ventilator	Sound absor-bing ventilator
Installation in frame			X			X			X	
Installation on frame										
Installation in glass rebate	X	X		X	X		X	X	X	
Installation on masonry										X
Glass reduction (mm)	90	80		100	100		60	80	135	
Glass thickness (mm)	20,24,28	20,24,28		20,24	20,24,28		20,24,28,32	20,24,28,32	20-42	
Installation thickness (mm)			20,24			21				
Connection to glazing at bottom		X			X		X	X	X	
Connection to glazing at top	X			X						
Connection to glazing on side					X					
Airflow rate (m³/h) at 2 Pa	56,5			61,6			69,5	50	56,5 - 163,1	35,2
Sound reduction factor (open) Dne,A (dB)	27,3			26,7			27,2	26,1	33 - 45,7	43,1
Sound reduction factor (closed) Dne,A (dB)	44,8			41,7			44,3	31,9		45,8

Fan-Light Openers

Slimline fan-light opener with face-fixed stays for tilt (bottom hung inward opening) units with one or more sashes.

- Vertical and horizontal rods covered with aluminium profile
- Operation via lever handle, vertical gear or corner gear. Electric drives for individual or group control
- Fittings for rectangular, oblique angle head, arch head and segmental arch head tilt windows, also in enhanced security ("Se") version
- Fittings for top hung outward opening windows
- Secure hold of tilt sashes with the opening stay disengaged (e.g. for window cleaning) by means of G.U security stay EURO-SOLID

Technical details, fitting variants			
Fitting variants	Sash width mm	Sash height mm	Opening width mm
Timber, PVC and aluminium			
VENTUS F 200	400-3600	from 250	165 / 200 *
VENTUS F 300	620-3600	from 350	220 / 300 *

* factory setting

Smoke and Heat Exhaust (RWA) Systems

Wherever utmost reliabilty and fast evacuation of smoke gases are demanded from a smoke exhaust installation in case of fire, RWA systems provide for safe, automatic opening of smoke exhaust apertures.

Advantages of RWA systems:

- Enable assisted and unassisted rescue in case of a fire emergency
- Provide for automatic ventilation
- Can easily be fit into window or façade assemblies and integrated in facility management systems

Comprehensive product range consisting of:

- Spindle drives, rack and pinion drives, and chain drives
- Locking drives
- Opening and locking hardware
- Compact and modular control centres
- Accessories: push buttons, smoke and heat detectors (differential), rain and wind sensors

Accessories for Builder‘s Hardware

for timber, PVC and aluminium windows and doors

Our well-assorted accessory range comprises modern high-quality products made from industry-leading manufacturers.

- Building chemicals
- Gaskets
- Window hinges
- Insect screens
- Fixing materials
- Glazing tools
- Door hinges
- Electric door openers

Aluminium Floor Thresholds with Thermal Break

for all house entrance doors and tilt-turn patio doors of timber and PVC, suitable both for new buildings and renovation.

Thermally broken thresholds considerably reduce the heat flow at the bottom of glazed doors.

The importance of thermal break:

With normal interior air conditions (interior temperature + 20° C, relative air humidity 50 %), condensate forms with a surface temperature of approximately + 9.2° C (dew point temperature).

With normal outside temperatures (down to – 10° C in winter), the efficient thermal break of G.U thresholds achieves a surface temperature clearly higher than + 9,2° C. The formation of condensate is prevented, the bottom area of the door will not suffer from moisture, a sound building structure will be protected and preserved.

Applications:

The threshold programme offers variants for

- New buildings and renovation
- House entrance and patio doors of timber and PVC
- Barrier-free living to DIN 18025.
- Versatile accessories providing solutions for complicated installation conditions
- Threshold-to-frame connectors for all current profiles

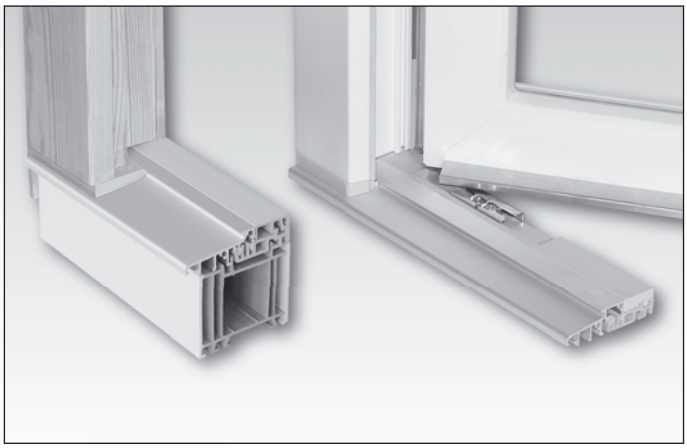

The newly developed sealing ferGUard*silver sets the standard

Surface coating free of chromate providing optimum corrosion protection = ferGUard

- Over the years, plaster, cement, paint and cleaning detergents considerably affect the surface of builder's hardware. Possible consequence: claims
- Due to the surface sealing ferGUard*silver, damage through corrosion involving reclamation is reliably prevented. The finish ferGUard*silver consists of a new combined coating (zinc + passivation without hexavalent chromium + additional coating) of superior anti-corrosive qualities.
- The coats are applied without organic components, heavy metals and hexavalent chromium; that is, the new surface sealing ferGUard*silver is environment-friendly and up to date.
- Another advantage:
  The new finish ferGUard*silver produces an impressively even, silvery finish on the fitting parts: A new, additional sales argument with your customers.

How does the additional coating work?

As before, the fitting parts are protected by a zinc coat with succeeding yellow passivation (method: zinc + standard chromizing).
The new additional coat was developed in cooperation with leading suppliers of chemical engineering and with the automotive industry.
After the usual treatment, the fitting components are covered with an inorganic coat in an additional procedure.
This process step is carried out on a fully automatic and computer controlled production line.
The additional coat deeply permeates into the passivated coat, sealing the whole component firmly and permanently.
Special corrosion inhibitors additionally retard the beginning of corrosion.

All in all, the new **G.U finish** offers to dealers, manufacturers and customers a large variety of **advantages**:

- Considerably improved corrosion protection due to additional coating.
- Longer product life of windows and doors.
- Without organic components and heavy metals, the new G.U finish is environment-friendly and up to date.
- If there is mechanic damage to the surface or if a component is cut (e.g. forend cut to length), the blank spot will not corrode due to the sacrificial protective effect of the zinc coat.
- Fewer customer claims due to a finish more resistant against detergents and household chemicals than others.
- Even, silvery finish of fitting parts throughout our complete product range.
- Complying with the environmental regulations of the EC, our newly developed coating system ferGUard*silver does not contain hexavalent chromium.

Planning software – Ordering software – Customised solutions

Planning software

Tendering service

Web-based tendering module for the creation of complex specifications in the formats Word / Excel / Gaeb81 / Gaeb82, with integrated Gaeb import function.

Features and advantages:

- Online with no need for installation
- Consistent support for the specification process
- Professional creation of BOQs
- Single items already composed previously are available as premade system texts
- Permantent upgrade of specification descriptions
- Full functionality of the tendering software
- Format-consistent data exchange with import/export interfaces according to the GAEB standard

Service email:
ausschreibungstexte@g-u.de

confiGUrator

Product finder for determining, quoting, and ordering hardware sets and parts lists for windows, doors and automatic entrance systems.

Features and advantages:

- Data calculation based on up-to-date prices, conditions and state of the art
- Configuration of special designs, e.g. oblique angle head windows or round arched windows, taking into account particular technical restrictions
- Configuration of panic exit devices, fire doors and multipoint locked doors to EN 179 and EN 1125 for narrow stile, timber, and steel door assemblies
- Administration of individual quotations and addresses

Service email:
confiGUrator@g-u.de

KeyManager

Professional software for configuring, administering, and recording mechanical and mechatronic master key systems.

Features and advantages:

- Convenient master key system data input with ‚kwd' file
- Configuring and administering master key systems with a single software
- Modern screen display presenting a convenient configuration and key combination chart

Service email:
keymanager@bks.de

Ordering software

CIS – Customer Information System

Ordering and customer information system comprising all articles with specified article number.

Features and advantages:

- Permanent article data upgrade
- Illustrated articles
- Provision of stock information
- Convenient dispatch of orders with import function (e.g., *.csv files)

Service email:
cis@g-u.de

ObS – Order by Scanning

Barcode scanner ordering system for production, store and/or administration to ascertain material requirements.

Features and advantages:

- Reduced material planning effort
- Plausibility check tool eliminates errors
- Reduced sourcing times

Service email:
transfermanager@g-u.de

MKS – MasterKeySystem

Web-based tool for planning and ordering master key systems.

Features and advantages:

- Permanent article data upgrade
- Plausibility check tool eliminates errors
- Maximum availability of information data related to existing master key systems
- Master key system data for BKS KeyManager 3.0 or higher
- Free retrieval of key combination records

Service email:
mks@bks.de

Customised solutions

Hardware data service

Creation of individual hardware solutions and provision of CNC data for automated window fabrication.

Features and advantages:

- Generation of individual hardware data for the market-leading window fabrication software programmes.
- Provision of CNC data for the control of production procedures in window and door fabrication
- Up-to-date article data base containing single items and hardware sets

Service email:
beschlagdatenservice@g-u.de

Electronic connection to the customer‘s merchandise management system

Optimised interfaces allowing for efficient order processing with the customer‘s material management system.

Features and advantages:

- Complete handling of the digital value-added chain from order through to invoice
- Just-in-time delivery rather than overstocked material stores
- Perfected ordering system with the benefit of error elimination thanks to the customer‘s material management system being integrated into the ordering procedure around the clock

Service email:
transfermanager@g-u.de

Hardware for window and patio door sashes

According to the manufacturer's liability described in paragraph 4 of the German "product liability law", the following information regarding side hung and tilt-turn hardware for window and patio door sashes must be observed. Non-compliance exempts the manufacturer of his liability.

1. Product information and specified application

1.1 Fitting types

1.1.1 Side hung and tilt-turn hardware

Definition: Side hung and tilt-turn hardware as covered by this definition is one-hand-operation side hung and tilt-turn hardware for windows and patio doors in building construction. The hardware is used to put windows and patio door sashes into a turning position by operating a "handle/lever" (handle) or into a limited tilting position in the case of the scissors (sash-stay) version.
Application: Side hung and tilt-turn hardware is used on vertically installed windows and patio doors made of timber, PVC, aluminium or steel or a combination of these materials. With conventional side hung and tilt-turn hardware, as covered by this definition, window and patio door sashes are locked or brought in various ventilating positions. When closing, the counterforce of a gasket has to be overcome as a rule.

1.1.2 Sliding hardware

Definition: Sliding hardware as covered by this definition, is hardware for sliding sashes for doors and windows that are mainly used as glazed exterior-structures. Fixed-glazing units and/or additional sashes i.e. Turn-Only sashes for cleaning purposes that are situated in a window element in combination with the sliding sashes.
Application: Sliding hardware is used on vertically installed window and door sashes made of timber, PVC, aluminium or steel and their corresponding material combinations. Sliding hardware as covered by this definition is equipped with a locking mechanism that locks the sliding sash to the frame, as well as rollers located on the bottom horizontal plane of the sliding sash. In addition, scissors stay-arms for tilting and mechanisms to lift and/or parallel-retract the sashes can be specified. By means of the hardware, the sashes are locked, brought into the ventilation position and pushed to the side.
Depending on the outside temperature, relative air humidity of the ambient air, as well as the application location of the sliding element, a temporary formation of condensation water on the aluminium track on the inside may occur. This is particularly promoted when the air circulation is hindered; for example due to deep reveals, curtains as well as unfavourable radiator positioning and the like.

1.1.3 Fan-light fittings

Definition: Fan-light fittings are devices designed for opening and closing fan-lights with various opening methods – particulary bottom hung inward opening and top hung outward opening windows in building construction.
They are designed to open and close window sashes which are not within the reach of a person by operating a lever handle connecetd with the opening stay via rods. The lever handle is mounted to the window frame or to the brickwork. The opening stay may also be operated via crank gear, electric motor, pneumatic or hydraulic cylinder.
The surface of the fan-light fittings is protected against corrosion.
Application: Fan-light fittings are used on windows made of timber, PVC, aluminium or steel, and their corresponding material combinations.
Opening stays come in various versions adapted to various opening methods of windows and to various possibilities of installing a window in a structure. The opening stays are designed to bring window sashes in several ventilation positions and to lock them. Differing applications are not in compliance with the hardware's specified application.
Burglar-resistant windows, windows for damp rooms and those for use in environments with aggressive, corrosive air content, require special hardware.
Opened window sashes achieve only a shielding function and do not meet any demands on joint impermeability, water tightness, sound reduction, heat insulation and burglary resistance.
For windows operated via electric motor, pneumatic or hydraulic cylinder although positioned within the reach of a person – i.e. below 2500 mm above floor level –, it is necessary to observe the guidelines applying to force controlled gates and doors.
After window cleaning, the stay must be reinserted and secured according to the manufacturer's instructions.
With top hung outward or inward opening sashes, it is necessary to provide catch stays in addition to the fan-light fittings to limit the tilt movement of the sash after the opening stay has been unhinged (catch position, e.g. for cleaning). The opening width of the catch position is slightly larger than the width of the opening stay.
Tilt sashes in cleaning position must be secured in a way to ensure that no unallowable forces act on the hinges.
In the case of wind and draught, the window sashes must be closed and locked. In order to prevent damage, the lever handle must be set in specified final position.

1.1.4 Horizontal and vertical pivot hardware

Definition: Horizontal and vertical pivot hardware as covered by this definition is one-hand operated hardware for windows in building construction. It is used to bring window sashes in a ventilation position by operating a handle. The opening angle of the sash may be limited either by the handle or by a locking device in the pivot bearing.
Application: Horizontal and vertical pivot hardware is used on vertically installed windows made of timber, PVC, aluminium or steel and their corresponding material combinations.
Customary horizontal and vertical pivot fittings as covered by this definition close window sashes and bring them in various ventilation positions. When closing, the gasket counterforce must be overcome as a rule.

1.1.5 Supplementary fittings for side hung and tilt-turn hardware, fan-light fittings

Definition and application: Rebate stays as well as rebate and cleaning stays as covered by this definition limit the tilt movement of a window sash when the stay of a fan-light opener is unhinged. The opening angle of the achieved catch position is slightly larger than the opening angle of the fan-light opener stay. Rebate and cleaning stays additionally hold the sash in horizontal position providing easy cleaning of the outside surface of the window pane.

Hardware for window and patio door sashes

Hardware for coupled sashes as covered by this definition consists of coupled sash hinges allowing for the opening of the coupled sash unit and cleaning the inside of window panes, and of coupled sash couplings designed to lock the coupled sash on the side opposite to the hinges. Applications going beyond opening coupled sashes for the purpose of cleaning are not in compliance with the hardware's specified application.
Window friction stays as covered by this definition hamper – due to friction – the movement of tilt-turn or side hung sashes in open position. Depending on the intensity of friction, they can hold the sash open, however, do not limit the opening.
When using supplementary hardware, the product information of the basic hardware and its specified application is to be observed.

1.2 Deviating applications – Liability exclusion

All applications deviating from 1.1 are regarded as non-compliant applications causing the exclusion of liability.

1.3 Advice concerning restrictions on use

Opened, unlocked or tilted window and patio door sashes provide only a shielding function and do not meet any demands on joint impermeability, water tightness, acoustic insulation, heat insulation, and burglary-resistance.
In case of wind and draught, window and patio door sashes must be closed and locked. Otherwise, they open or close on their own due to air pressure or air suction. A fixed opening position of window and patio doors sashes is achieved by means of additional hardware only.

1.4 Particular agreements for extended requirements

Burglar-resistant window and patio doors, windows and patio doors for damp rooms and those for use in environments with aggressive, corrosive air content require hardware especially adapted for the individual application with performance features particularly agreed upon.
The resistance against wind loads in a closed and locked state is dependent on the respective design of windows and patio doors. If it is necessary to withstand specified wind loading (i.e. in accordance with DIN EN 12210 – in particular pressure test p3), a suitable hardware composition is to be agreed upon individually with regard to the particular window or patio door design and frame material.
In general, the hardware defined in 1.1 fulfils the demands made on barrierfree construction (for example to DIN 18025). However, the suitability for barrierfree dwellings requires special hardware compositions and ways of assembly in windows and patio doors which must be individually agreed upon.

2. Misuse

Misuse – product not used as specified – of the hardware described in 1.1 occurs in particular

- if obstacles are inserted in the opening vicinity between frame and sash, thus preventing or interfering with its proper, specified use.
- if additional loads are put on windows or patio door sashes (for example if children swing on the window or door sash).
- when window and patio door sashes are forcefully pressed against the window reveals (for example by the wind), so that the hardware or the frame material or other individual window or patio door components are damaged or destroyed and/or consequential damage arises.
- if while closing a window or patio door sash, someone reaches into the rebate between the sash and frame (injury hazard).

Referring to fanlight fittings in particular

- if the stay arms are not engaged and secured in compliance with the manufacturer‘s instructions.
- if, with the opening stay unhinged, the window sash is not put into the appropriate cleaning position.

3. Liability

The respective entire hardware set may exclusively consist of G.U hardware components. In the case of combinations not approved by Gretsch-Unitas GmbH Baubeschläge, and/or inappropriately assembled hardware, and/or the use of non-original and/or non factory-approved accessory components, no liability is accepted.
For professional assembly G.U working drawings and mounting instructions are to be consulted.
When using PVC or aluminium profiles, the profile manufacturers' and/or system owners' specifications are to be observed.
The window fabricator is essentially responsible for the observance of the specified system-related dimensions (e.g. gasket gap dimensions). These dimensions are to be surveyed regularly, in particular when using hardware components for the first time, and furthermore during window fabrication and window installation. The hardware components are designed in a way that the system-related dimensions can be adjusted, provided the hardware can have an effect on these. If a deviation from these dimensions is discovered only after the installation of a window, no liability is accepted for expenses arising from faults caused by this deviation.

4. Product performance – Manufacturer's application advice

4.1 Maximum permissible sash weights

The maximum sash weights specified below for each hardware type must not be exceeded. The hardware component with the least permissible load-carrying capacity determines the max. sash weight. Application diagrams and component classifications are to be observed.
Referring to fanlight fittings in particular
Apart from the sash weight, the distance between the sash‘s centre of gravity and its pivotal point is decisive for determining the maximally allowed sash dimensions.
When determining the maximum sash size and the number of coupled sashes, it is important to observe the manufacturer‘s instructions referring to the particular type of drive.

4.2 Sash sizes

The application diagrams in the planning documentation, product catalogues or installation instructions show the correlation of permissible sash rebate widths and sash rebate heights, depending on various glass weights and/or thicknesses. The resulting sash dimensions and sash formats (portrait and/or landscape format) – as well as the maximum sash weight – may not be exceeded under any circumstances.

4.3 Hardware composition

The manufacturer’s regulations concerning the composition of hardware are obligatory (for example the application of additional stay arms, the hardware design for burglar-resistant window and patio door sashes etc.)

Hardware for window and patio door sashes

5. Product maintenance

5.1 General advice

Security relevant hardware components are to be examined at least once a year for stability and wear and tear. Depending on the requirements, the fixing screws are to be tightened and/or parts replaced. In addition to this, the following maintenance work is to be carried out annually:

- All movable parts and all locking points on the hardware are to be greased and tested.
- Only cleaning and maintenance agents that do not damage the corrosion protection of the hardware components are to be used.

Works such as adjusting the hardware – particularly in the vicinity of the corner bearings and stay arms – as well as replacing parts or hinging and unhinging window or patio door sashes are to be carried out by a specialist company.
When treating the window or patio door surface (i.e. painting or varnishing), the hardware must be excluded from this treatment and protected against paint or varnish splashes.

5.2 Preservation of the surface finish

Electrolytically applied zinc coatings are not affected in a normal room climate if no condensation water can form on the hardware or if condensation water formed occasionally can dry rapidly.
In order to permanently preserve the hardware's surface quality and to avoid deterioration by corrosion, it is imperative to observe the following points:

- The hardware and/or the rebate areas are to be ventilated sufficiently in particular during the building phase so that they are not exposed either to direct wetness or to condensation. It is necessary to permanently ensure by suitable measures that moist air cannot condense in the rebate areas.
- The hardware is to be kept free from deposits and soiling from building materials (building dust, plaster, cement etc.). Possible soilings from plaster, mortar or similar materials are to be removed with water before they cure.
- Aggressive vapours (for example: through formic acid or acetic acid, ammoniac, amine or ammoniac compounds, aldehydes, phenols, chlorine, tannic acid etc.) in connection with even small formations of condensation can lead to fast corrosion of the hardware. For this reason, evaporation in the vicinity of the windows must be avoided.
- On windows and patio doors made of oak or other types of timber with a high concentration of (tannic-) acid, it must be ensured by a suitable surface treatment that these content substances can not evaporate from the timber. The hardware must not come in direct contact with untreated timber surfaces.
- Furthermore, no acetic-acid or cross-linked acidic sealing compounds or compounds containing the substances mentioned above must be used, since both the direct contact with the sealing compound and its vaporisation can attack the surface.
- The hardware may only be cleaned with mild, pH-neutral cleaning agent in diluted form. Under no circumstances may aggressive, acidiferous cleaners or abrasive cleaning agents containing the above mentioned substances be used.

6. Obligation to issue information and instructions

In order to fulfill the information and instruction obligations – which according to the "product liability law" are passed to dealers, intermediaries, fabricators and end users – as well as the required maintenance operations, the following documentation is made available :

- Planning documentation
- Product catalogues
- Installation instructions
- Maintenance and care instructions as well as operating instructions, in the following referred to as "product information".

In order to safeguard the function of windows and patio doors,

- planning engineers are obliged to request and comply with the manufacturer's or authorised dealer's "product information".
- specialised dealers are obliged to observe and request the "product information" from the manufacturer and to pass it on to subsequent dealers and/or fabricators, and in turn to advise them of their obligation to pass the information on to their customers.
- fabricators are obliged to observe the "product information" and in particular to pass on service and maintenance instructions as well as operating manuals to builders and end-users.

7. Use of related hardware

The variations possible within individual hardware systems – for example tilt and top-hung hardware, or hardware providing a circumferential ventilation gap (by setting off the sash in parallel) instead of, or in addition to the tilted ventilation position – are to be treated according to the respective product information and guidelines concerning product performance, product maintenance, information and instruction obligations, specified use and misuse.

Information from the ‚Fachverband Schloss- und Beschlagindustrie e.V.‘ (German Locks and Fittings Trade Association)
Velbert POB 10 03 70, 42503 Velbert, Germany

The following documentation concerning the correct handling of fittings for windows and window doors with detailed information and explanatory pictograms can be downloaded from the association‘s website:

- Fittings for windows and window doors
  Requirements/instructions on the product and on liability (VHBH)
- Fittings for windows and window doors
  Requirements/instructions for end-users (VHBE)
- Attachment of supporting fitting components for turn-only and tilt&turn fittings
  with definitions for turn-only and tilt&turn fittings and their possible installation positions

http://www.fvsb.de/ggsb/richtlinien.asp

Product group

D

Tilt-turn, first tilt, side hung and tilt sash fittings

Contents

Tilt-turn, first tilt, side hung and tilt sash fittings, miscellaneous fittings for aluminium windows and patio doors

Introduction

Product information JET AK 8

Locking mechanisms JET AK 8

Hinge side JET AK 8

Drilling jigs, assembly tools JET AK 8

Product information projecting top hung window fittings

Projecting top hung window fittings

Product information parallel offset window fittings

Parallel offset window fittings

Product information UNI-JET C and D

Locking mechanisms UNI-JET C and D – fixed gear

Locking mechanisms UNI-JET C and D – variable gear

Hinge side UNI-JET C

Hinge side UNI-JET D

Gears UNI-JET C and D

Drilling jigs, assembly tools UNI-JET C and D

Order catalogue, part 2
Tilt-turn, first tilt, side hung and tilt sash fittings for aluminium windows and patio doors

Contents

Part 2 of the present order catalogue contains all tilt-turn, first tilt, side hung and tilt sash fittings as well as accessories UNI-JET for aluminium windows and patio doors according to the latest state of the art.
The following indications will make you familiar with the concept of the catalogue and help you to handle it easily.

Catalogue structure

The present catalogue part is structured in the following way:
– Optional parts and turn handles for locking mechanisms
– Locking mechanisms UNI-JET
– Hinge side tilt-turn, first tilt, side hung and tilt sash fittings UNI-JET, optional parts
– Single parts and accessories
– Drilling and positioning jigs
– Locking plates

Optional parts and turn handles for locking mechanisms

The option pages show you optional parts and turn handles for all tilt-turn, first tilt, side hung and tilt sash fittings at a glance. All supplements of standard versions are clearly arranged.

Locking mechanisms UNI-JET

Fitting requirements according to size of sashes and schemes
The illustrations of the fittings are supplemented by corresponding parts tables helping to determine the hardware required depending on the size of the sashes. Parts supplementing standard versions are clearly presented and can be easily selected.

Hinge side UNI-JET tilt-turn, first tilt, side hung and tilt sash, optional parts

Fitting requirements for scheme A to E
The illustrations of the fittings are supplemented by corresponding parts tables helping to determine the hardware composition.
Parts supplementing standard versions are clearly presented and can be easily selected.

Single parts and accessories

Gears, rebate shoot bolts and accessories are presented with useful indications to application and packing units.

Drilling and positioning jigs

Drilling jigs, positioning jigs and auxiliary tools for hardware assembly are grouped according to fitting types.

Locking plates

Locking plates are grouped according to opening method, profile features and burglary resistance class of the fittings.

Order numbers

The order number gives information about
– the article
– its size
– its application – e.g. DIN lh or DIN rh
– its colour/finish

Example
Order number
6-30889-01-0-1

6-30889- - -	Article number
- -01- -	Size
- - -L-	DIN left hand (hinge side)
- - -R-	DIN right hand (hinge side)
- - -0-	Usable on both sides
- - - -1	F 1/EV 1, natural (silver colour), fer**GU**ard*silver
- - - -2	F 2/EV 2, champagne colour
- - - -3	F 3, brass colour (gold colour)
- - - -4	UC 3, medium bronze (medium brown)
- - - -A	F 4, bronze colour
- - - -5	UC 5, dark bronze (dark brown RAL 8022)
- - - -6	onyx matt (black RAL 9005)
- - - -7	white (RAL 9016)
- - - -7T	white (RAL 9010)
- - - -8	Stainless steel (stainless steel colour)
- - - -*	Surface treatment variable (available colours see price list)

Prices

Single part price list »Total programme«
The prices are listed by ascending article numbers.

Additional sales documentation

Apart from the order catalogue, the following documentation on tilt-turn, first tilt, side hung and tilt sash fittings UNI-JET is available:
– Brochures and leaflets informing about product features and advantages
– Presentation boards of all fitting versions
– Working drawings with mounting instructions
– Instructions for maintenance and care

Tilt-turn, first tilt, side hung and tilt sash fittings for aluminium windows and patio doors

Application

Range of applications for tilt-turn and side hung fittings UNI-JET:
- single-sash windows and doors
- double-sash windows and doors without mullion
- single-sash doors, lockable
- double-sash doors, lockable, without mullion

Locking mechanisms

The fittings are concealed in the rebate and provide for one handle operation. All locking parts are designed for Euro groove 15/20 mm. The locking pins of locking mechanism, stay arms and corner transmissions are adjustable. The clampable locking plates are adjustable to allow for optimum gasket pressure.

From a width of 1400 mm, sashes are fitted with an additional stay arm. From sash widths and heights over 1200 mm, middle locks are used. Corner transmissions are provided with rust-proof 4-leaf stainless steel springs.

Maximum sash dimensions

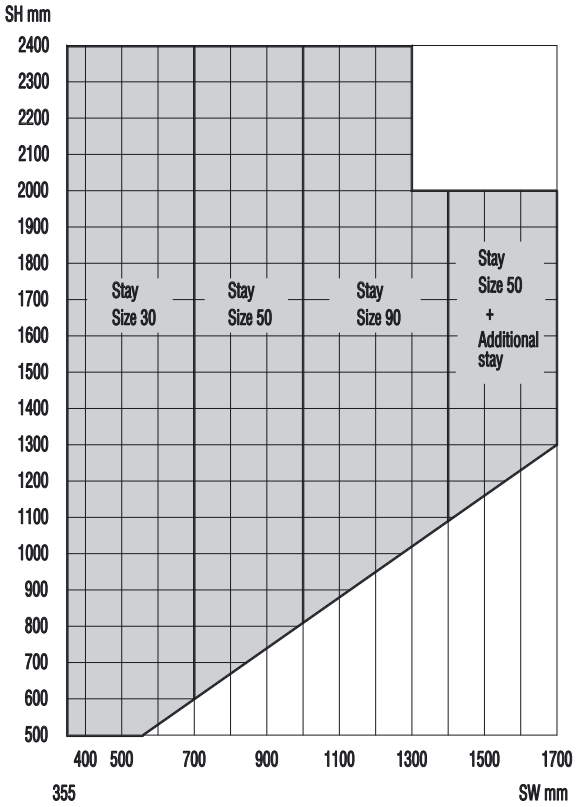

Execution of hinge sides

Tilt-turn, first tilt and side hung sash fittings JET AK 8
Clampable fittings for windows and patio doors with 21 mm rebate clearance, Euro groove 15/20 mm on the sash and 14/18, 12/15 or 10/14 groove on the frame.
For sash weights up to 80 kg. Vertical adjustment on the corner bearing + 2,5 to - 1,5 mm, horizontal adjustment ± 1 mm. Stay arm adjustable ± 3 mm, gasket pressure adjustable ± 1 mm.

Tilt-turn, first tilt and side hung sash fittings JET AK 8-130
Clampable fittings for windows and patio doors with 21 mm rebate clearance, Euro groove 15/20 mm on the sash and 14/18, 12/15 or 10/14 groove on the frame.
With bag of additional parts for sash weights up to 130 kg. Vertical adjustment on the corner bearing + 2,5 to - 1,5 mm, horizontal adjustment ± 1 mm. Stay arm adjustable ± 3 mm, gasket pressure adjustable ± 1 mm.

Locking plates and packings

Frame profile specific locking plates and packings according to table (see at the end of this catalogue chapter).

Drilling jigs, assembly tools

Drilling jigs and other tools for hardware assembly are to be found at the end of this catalogue chapter and also in the respective working drawings.

Geared handles SPACIO and ADAGIO-A

The geared handles with concealed fixings are made of aluminium. The rosettes are provided with a rugged detent device. A wrong operation safety device is assembled along with the geared handle. Lockable and removable handles as well as handles with extended carrier fork complete the programme.

Standard colours:

uncoated	without surface coating
F 1/EV 1	silver colour
UC 5	dark bronze
black	black (RAL 9005)
white	white (RAL 9016 or RAL 9010)

Turn handles DIRIGENT [1]

The handles are made of aluminium with concealed fixings. The rosettes have a robust retention feature and fixed cams. Lockable handles complete the programme.

Standard colours:

F 1/EV 1	silver colour
F 2/EV 2	new silver colour
F 3	gold colour
F 4	light brown
dark brown	dark brown (RAL 8022)
black	black (RAL 9005)
white	white (RAL 9016 or RAL 9010)

[1] More turn handles see part 3 of the present order catalogue.

Materials, surface sealing fer**GU**ard*silver

The fitting parts are made of high quality steel, zinc die-casting or aluminium alloys.
Depending on the material, they are protected against corrosion by surface sealing with fer**GU**ard*silver or by anodisation (aluminium parts).

Standard surface sealing of tilt-turn fittings: fer**GU**ard*silver

All locking parts of tilt-turn fittings come with the surface sealing fer**GU**ard*silver.

Abbreviations

CB	Cylinder bore
FT	First tilt fittings
G	Gear position
GIS	Gear position inactive sash
IS	Inactive sash fittings
lh	Left hand
ML	Middle lock
PU	Packing unit
rh	Right hand
SH	Side hung fittings
SH	Sash rebate height
ST	Sash thickness
SW	Sash rebate width
TT	Tilt-turn fittings

Profile system manufacturers' information

It is important to observe the product information issued by the profile system manufacturers, especially information concerning construction and fabrication, maximum sash dimensions and weights and material features such as linear expansion of profiles.

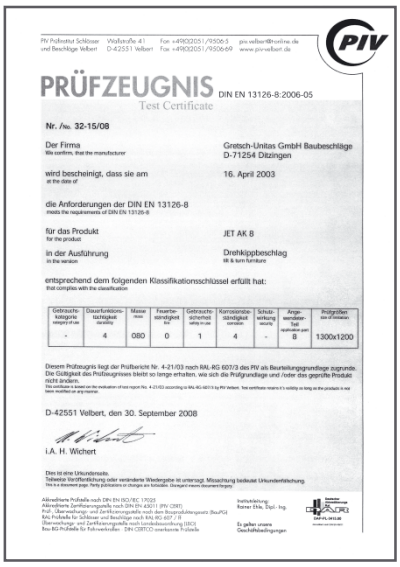

PIV Prüfinstitut Schlösser und Beschläge Velbert
Wolfsstraße 41, D-42551 Velbert
Fax: +49(0)2051/95063 Fax: +49(0)2051/95069
piv.velbert@online.de www.piv-velbert.de

PRÜFZEUGNIS DIN EN 13126-8:2006-05
Test Certificate

Nr. /No. 32-15/08

Der Firma / We confirm, that the manufacturer: Gretsch-Unitas GmbH Baubeschläge D-71254 Ditzingen

wird bescheinigt, dass sie am / at the date of: 16. April 2003

die Anforderungen der DIN EN 13126-8 / meets the requirements of DIN EN 13126-8

für das Produkt / for the product: JET AK 8

in der Ausführung / in the version: Drehkippbeschlag / tilt & turn furniture

entsprechend dem folgenden Klassifikationsschlüssel erfüllt hat: / that complies with the classification

Gebrauchskategorie / category of use	Dauerfunktionstüchtigkeit / durability	Masse / mass	Feuerbeständigkeit / fire	Einbruchsicherheit / safety in use	Korrosionsbeständigkeit / corrosion	Schutzwirkung / security	Angewendete Teil / application part	Prüfgrößen / size of measure
-	4	080	0	1	4	-	8	1300x1200

Diesem Prüfzeugnis liegt der Prüfbericht Nr. 4-21/03 nach RAL-RG 607/3 des PIV als Beurteilungsgrundlage zugrunde. Die Gültigkeit des Prüfzeugnisses bleibt so lange erhalten, wie sich die Prüfgrundlage und / oder das geprüfte Produkt nicht ändern.
This certificate is based on the evaluation of test report No. 4-21/03 according to RAL-RG 607/3 by PIV Velbert. This certificate remains it's validity as long as the products is not been modified or any reason.

D-42551 Velbert, den 30. September 2008

i.A. H. Wichert

Dies ist eine Urkundenseite.
Teilweise Veröffentlichung oder veränderte Wiedergabe ist untersagt. Missachtung bedeutet Urkundenfälschung.
This is a document page. Partly publications or changes are forbidden. Disregard means document forgery.

Akkreditierte Prüfstelle nach DIN EN ISO/IEC 17025
Akkreditierte Zertifizierungsstelle nach DIN EN 45011 (PPV CERT)
Anerkannte Prüfstelle für Fenster, Türen, Beschläge und Abschlussvorrichtungen (BauPG)
RAL Prüfstelle für Schlösser und Beschläge nach RAL-RG 607 / 3
Überwachungs- und Zertifizierungsstelle nach Landesbauordnung (SBO)
Bau-RG-Prüfstelle für Fahrzeugtüren - DIN CERTCO anerkannte Prüfstelle

Institutsleitung: Rainer Ehle, Dipl.-Ing.

Es gelten unsere Geschäftsbedingungen

Test certificate JET AK 8

Tilt-turn, first tilt, side hung and tilt sash fittings for aluminium windows and patio doors

Application of locking mechanisms

Locking mechanisms for schemes A to I

Locking mechanism/ Opening method	No. of sashes	Carrier/ Mill-in gear backset 14 mm, Handle position mm	Mill-in gear lockable, backset mm	Sash rebate width SW mm	Sash rebate height SH mm	Standard working drawing
Tilt-turn sash	1	min. 245	25 up to 50	355-1700	500-2400	0-44170
Tilt-turn sash	2	min. 245	25 up to 50	355-1700	500-2400	0-44170
First tilt sash	1	min. 245	25 up to 50	355-1700	500-2400	0-44529
First tilt sash	2	min. 245	25 up to 50	355-1700	500-2400	0-44529
Side hung sash	1	min. 245	25 up to 50	355-1700	500-2400	0-44231
Side hung sash	2	min. 245	25 up to 50	355-1700	500-2400	0-44231
Inactive sash	2			355-1700	500-2400	0-44231
Tilt sash	1	centred				

Application of hinge side hardware

Hinge side hardware types

Hinge side/ Opening method	Opening method	Rebate clearance mm	Sash weight max. kg	Space required on hinge side mm	Standard working drawing	
JET AK 8						
Tilt-turn sash	TT	21	80	17	0-44170	
First tilt sash	FT	21	80	17	0-44529	
Side hung sash	SH	21	80	17	0-44231	
Inactive sash	IS	21	80	17	0-44231	
Tilt sash	T	21	80	17		
JET AK 8-130						
Tilt-turn sash	TT	21	130	17	0-44170	
First tilt sash	FT	21	130	17	0-44529	
Side hung sash	SH	21	130	17	0-44231	
Inactive sash	IS	21	130	17	0-44231	

Tilt-turn, first tilt, side hung and tilt sash fittings for aluminium windows and patio doors

Tilt-turn and first tilt windows and patio doors

Fitting arrangements and sash sizes for schemes A to E

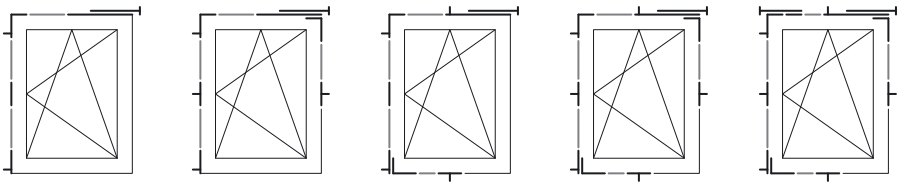

Tilt-turn and first tilt windows, scheme	**A**	**B**	**C**	**D**	**E**
Middle lock (Dimensions depending on profile system)		vertical	horizontal	vertical horizontal	vertical horizontal Additional stay arm
Tilt-turn and first tilt patio doors, scheme		**B**		**D**	
Middle lock (Dimensions depending on profile system)		vertical		vertical horizontal	

Side hung windows and patio doors

Fitting arrangements and sash sizes for schemes A to D

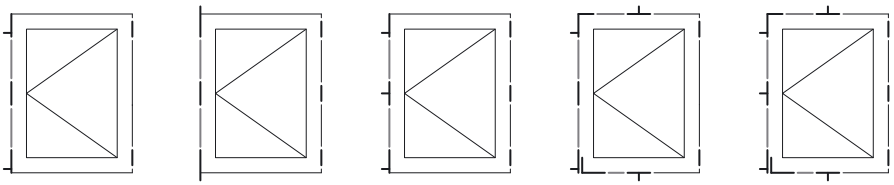

Side hung windows, scheme	**A**	**A 1**	**B**	**C**	**D**
Middle lock (Dimensions depending on profile system)			vertical	horizontal	vertical horizontal
Middle hinge		Middle hinge	Middle hinge		Middle hinge
Side hung patio doors, scheme			**B**		**D**
Middle lock (Dimensions depending on profile system)			vertical		vertical horizontal
Middle hinge			Middle hinge		Middle hinge

Windows and patio doors with false mullion

Fitting arrangements and sash sizes for schemes G to I

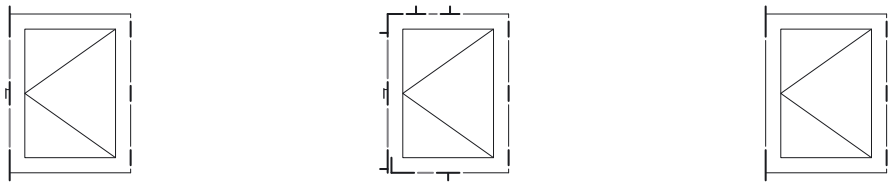

Inactive window sash, scheme	**G**	**H**	**I**
Middle lock Dimensions according to profile		horizontal	
Middle hinge	Middle hinge	Middle hinge	Middle hinge
Inactive patio door sash, scheme	**G**	**H**	**I**
Middle lock Dimensions according to profile		horizontal	
Middle hinge	Middle hinge	Middle hinge	Middle hinge

Assembly dimensions – frame and sash profile

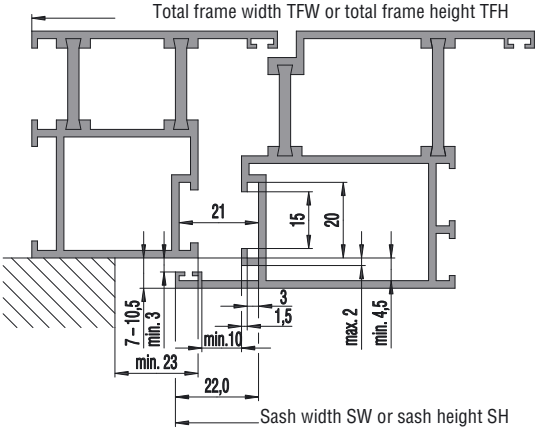

Frame and sash profile
Sash with Euro groove 15/20

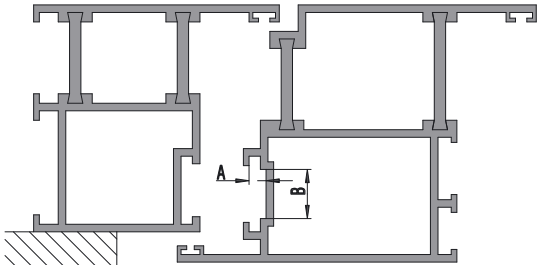

Corner transmissions

6-30889-**00**-0-1	Euro groove 15/20 Deepened Euro groove 15/20 with dim. A = max. 3,9 mm or dim. B = max. 13 mm
6-30889-**01**-0-1	Deepened Euro groove 15/20 with dim. A = 4,0 up to 5,1 mm

Frame and sash profile
Sash with deepened Euro groove 15/20

Assembly dimensions – false mullion profile

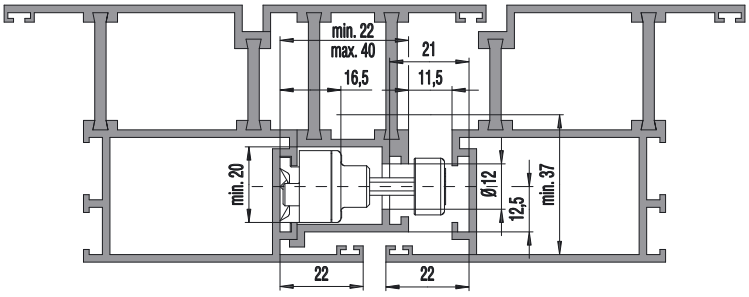

False mullion profile with single groove for locking plates
Locking with inavctive sash gear or shoot bolts

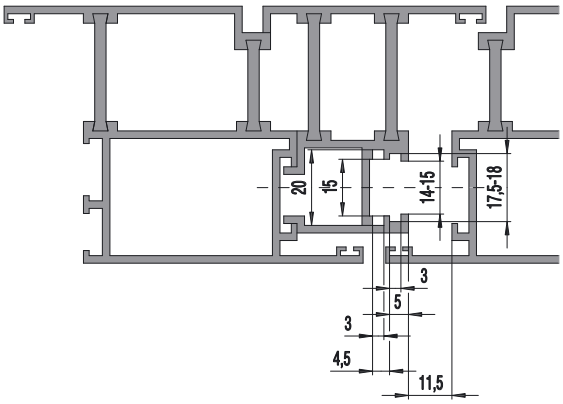

False mullion profile with double groove for locking plates
Locking with rebate shoot bolt or shoot bolts

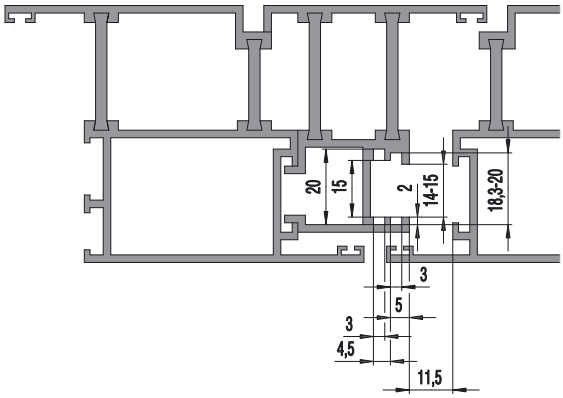

False mullion profile with symmetrical double groove for locking plates
Locking with rebate shoot bolt or shoot bolts

Assembly dimensions – frame grooves

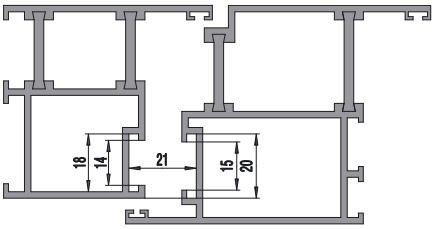

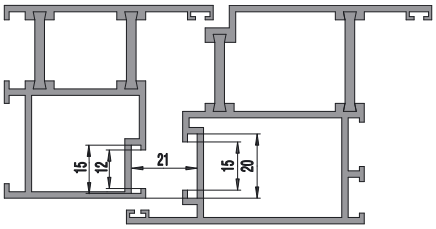

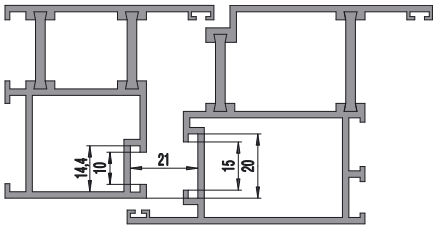

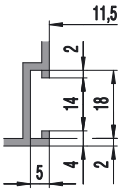

Frame groove 14/18

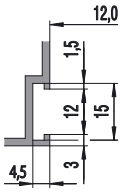

Frame groove 12/15

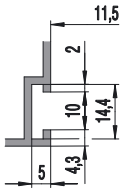

Frame groove 10/14

Drilling and milling dimensions

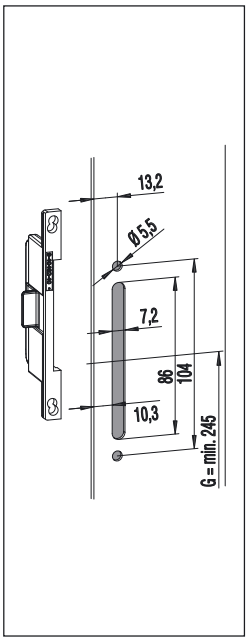

Dimensions for geared handle and WOSD (wrong operation safety device)
Drilling jig 6-25373-01-0-0

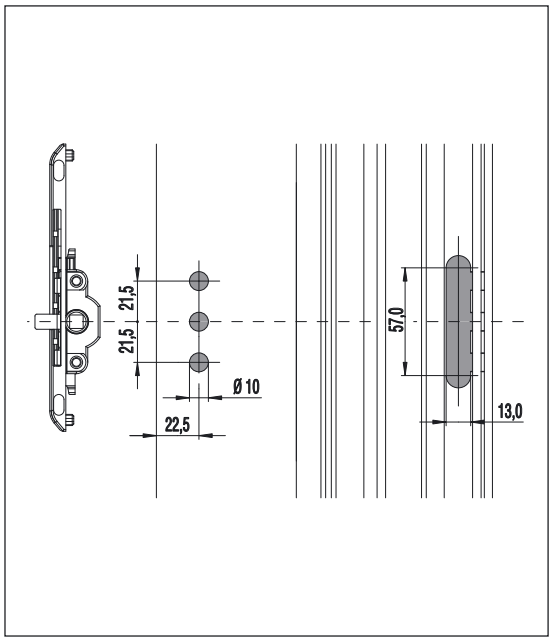

Dimensions for mill-in gears with or without WOSD

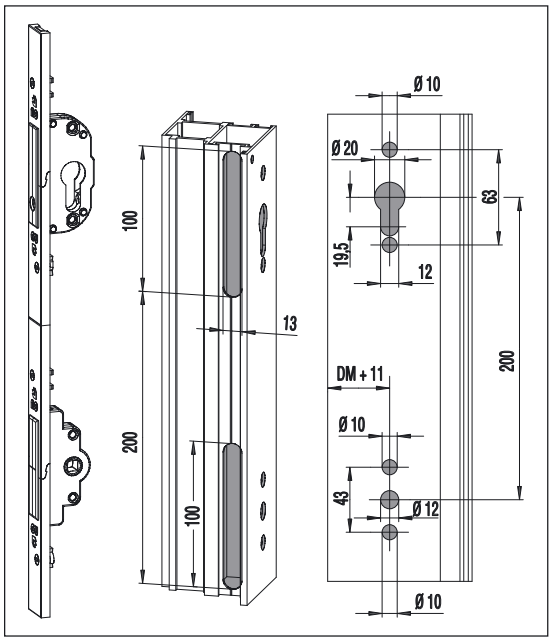

Dimensions for mill-in gears with or without WOSD and lock with cylinder bore
Drilling jig 6-26191-00-0-2

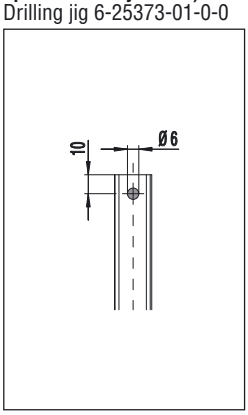

Push rod drill holes

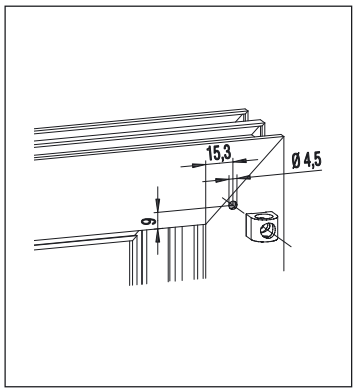

Dimensions for stay arm bearing 130 in frame profiles
Drilling and mounting jig 6-31951-00-0-6

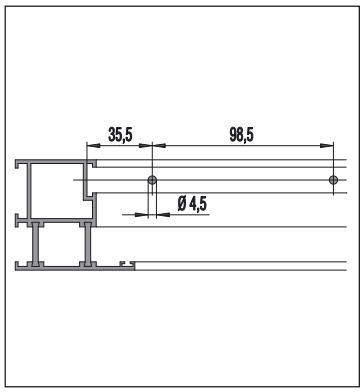

Dimensions for additional stay arm in frame profiles

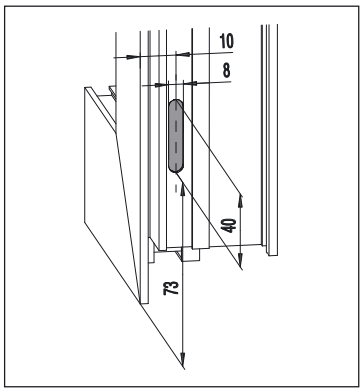

Dimensions for shoot bolts in false mullion profile with single groove

Push rod cutting lengths with 22 mm sash overlap

Tilt-turn and first tilt fittings

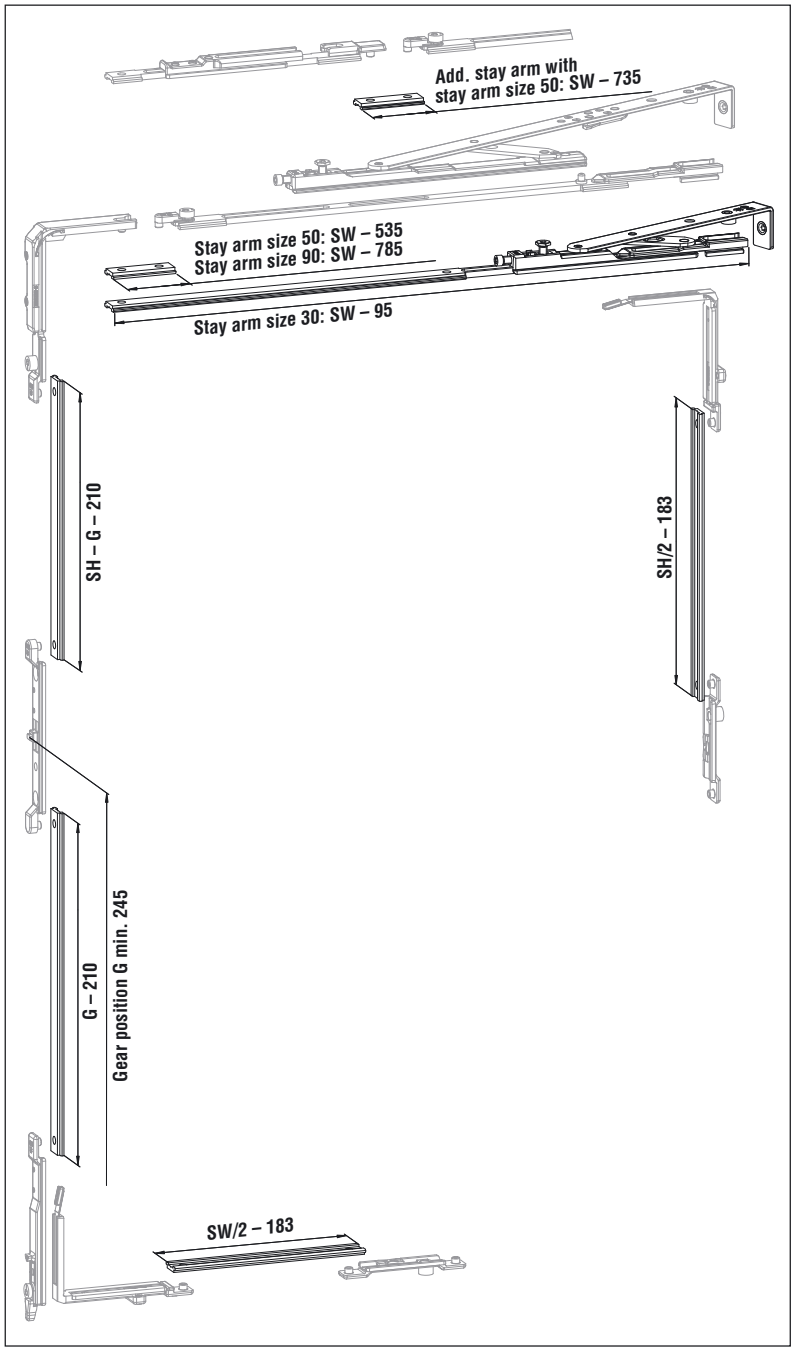

Side hung fittings

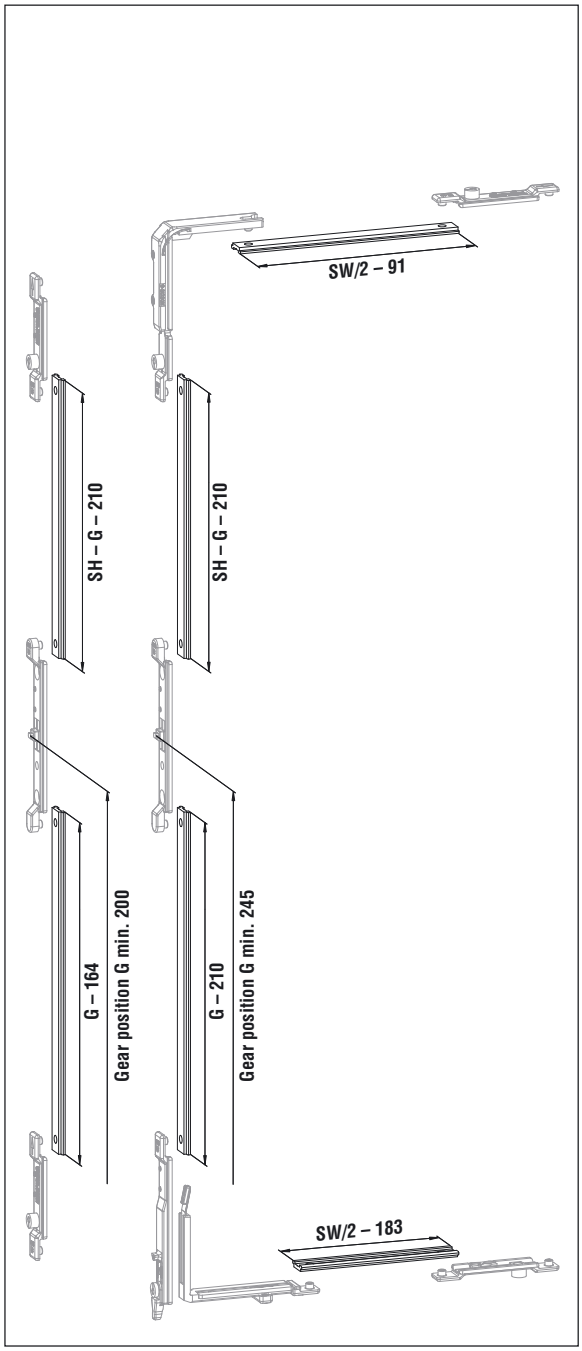

Push rod cutting lengths with 22 mm sash overlap

Inactive sash fittings
False mullion profiles with single groove

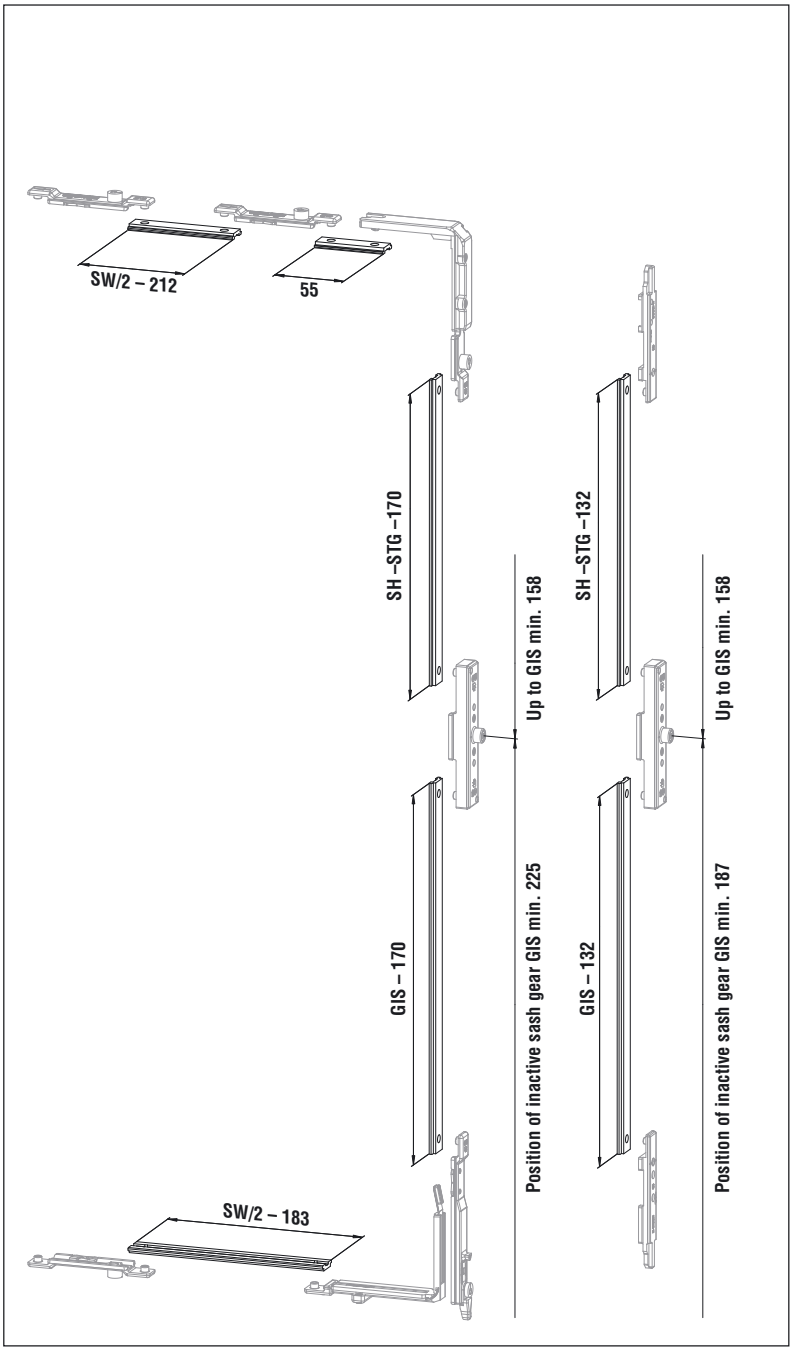

Inactive sash fittings
False mullion profiles with double groove

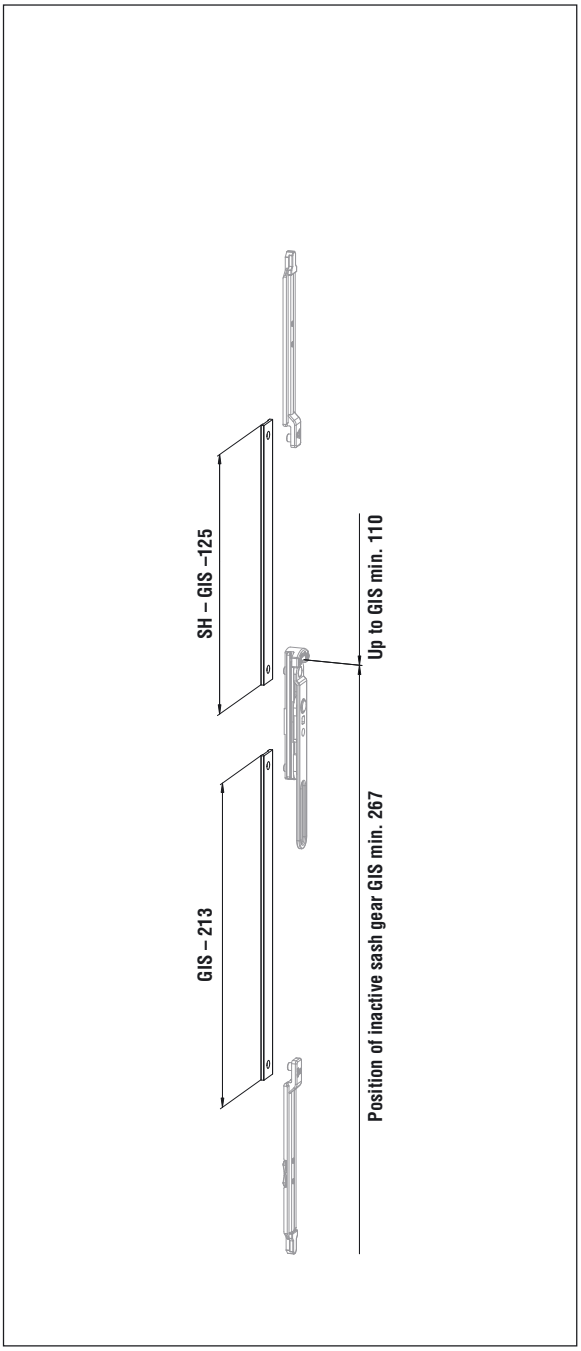

Geared handles SPACIO
aluminium, painted – 1 carrier fork 22 mm

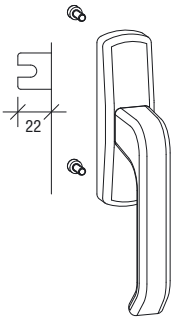

Bag of geared handle SPACIO – not lockable
2 screws
G-46551-96-0-*

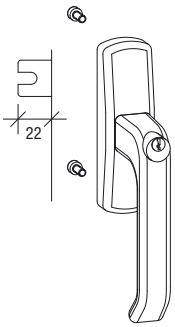

Bag of geared handle SPACIO – lockable
2 screws, 2 keys
G-46553-96-0-*

Bag of geared handle SPACIO – lockable for first tilt fittings
2 screws, 2 keys
G-46557-96-0-*

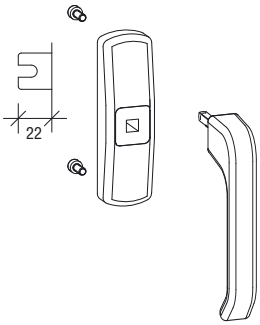

Bag of geared rosette SPACIO
2 screws
G-46555-96-0-*

Removable handle SPACIO
G-18888-00-0-*

Geared handles SPACIO
aluminium, painted – 1 carrier fork 33 mm

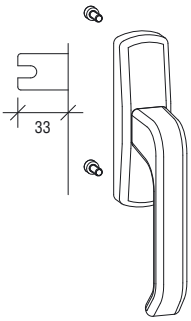

Bag of geared handle SPACIO – not lockable
2 screws
G-46595-96-0-*

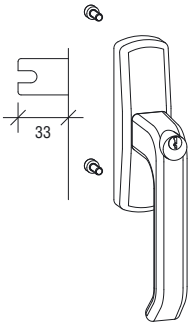

Bag of geared handle SPACIO – lockable
2 screws, 2 keys
G-46597-96-0-*

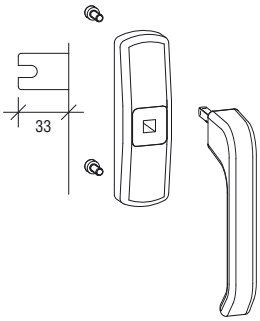

Bag of geared rosette SPACIO
2 screws
G-46596-96-0-*

Removable handle SPACIO
G-18888-00-0-*

Geared handles SPACIO
aluminium, painted – 2 carrier forks 22 mm – DIN right hand

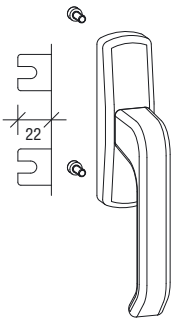

Bag of geared handle SPACIO – not lockable
2 screws
G-46552-96-R-*

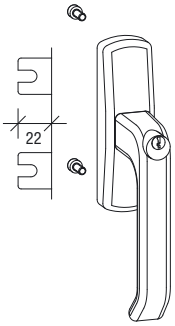

Bag of geared handle SPACIO – lockable
2 screws, 2 keys
G-46554-96-R-*

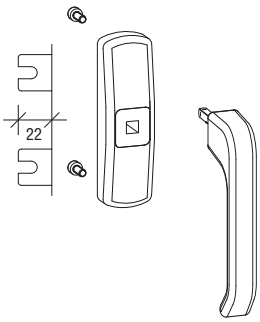

Bag of geared rosette SPACIO
2 screws
G-46556-96-R-*

Removable handle SPACIO
G-18888-00-0-*

Bag of accessories
Conversion of SPACIO handles with 2 carrier forks to DIN left hand
G-46550-00-L-1

Geared handles ADAGIO-A
powder coated

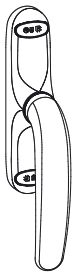

Geared handle ADAGIO-A – not lockable

6-31723-00-0-*

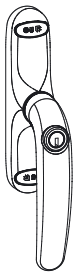

Geared handle ADAGIO-A – lockable
2 keys
6-31724-00-0-*

Clip – neutral
9-41505-00-0-*

Accessories for ADAGIO-A

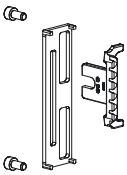

Bag of accessories for 1 carrier fork 22 mm
K-15814-00-0-1

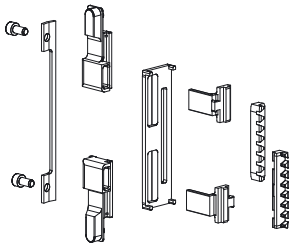

Bag of accessories for 2 carrier forks
K-15815-00-0-1

Accessories for side hung sashes with geared handle SPACIO

90° limiter
for aluminium rosettes
9-34612-00-0-6

Accessories for geared handles SPACIO and ADAGIO-A

Fixing plate – single
hole centre distance mm

104	**9-41506-00-0-8**

Wrong operation safety device (WOSD) – single
hole centre distance mm

84 and 98	**6-31065-10-0-1**
96 and 104	**6-31065-40-0-1**

Handles DIRIGENT-F for mill-in gears [1]

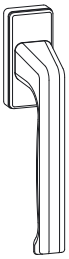

DIRIGENT-F
Spindle 25 6-28072-25-0-*
Spindle 29 6-28072-29-0-*

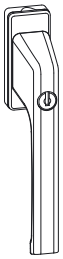

DIRIGENT-F/Z
with push button cylinder, all keys alike
Spindle 29 6-28075-29-0-*

MODENA-F/Z 100 Nm [2]
for security windows and patio doors
Spindle 29 6-34397-29-0-*

DIRIGENT-F/SG
Spindle 50 8-00694-50-0-7

Rosette/F
inside – flat
6-24913-00-0-*

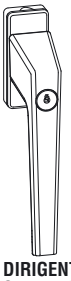

DIRIGENT-F First tilt
Spindle 29 6-31557-29-0-*

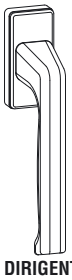

DIRIGENT-F
without spindle
6-28072-00-0-*

DIRIGENT-F/AF,
outside – flat
6-25223-00-0-*

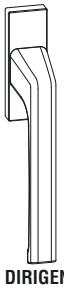

DIRIGENT-F/A,
outside
6-25993-00-0-*

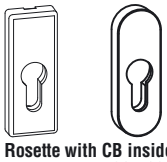

Rosette with CB inside
square K-17205-02-0-*
oval K-17204-02-0-*

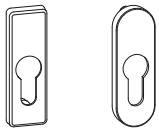

Rosette PZ/A outside
square 9-43605-02-0-*
oval 9-43582-02-0-*

Spindle
FD 56-68 9-26874-56-0-1
FD 69-80 9-26874-69-0-1

Inside/ outside operation
Countersunk screw M 5
FD 50-54 9-13255-60-0-1
FD 55-59 9-13255-65-0-1
FD 60-64 9-13255-70-0-1
FD 65-69 9-13255-75-0-1
FD 70-74 9-13255-80-0-1
FD 75-80 9-13255-85-0-1

Inside operation
Countersunk screw M 5
Spindle 25 9-13255-30-0-1
Spindle 29 9-13255-35-0-1

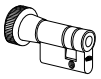

Knob lock
Backset 25 - 50 mm
K-13282-00-0-*

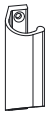

Pull handle outside
9-22921-00-0-*

[1] = More turn handles see part 3 of the present order catalogue.
[2] = Tested to DIN V EN V 1627 for resistance to pull-off and twist-off attempts at 100 Nm.

G.U Face fixed window lock

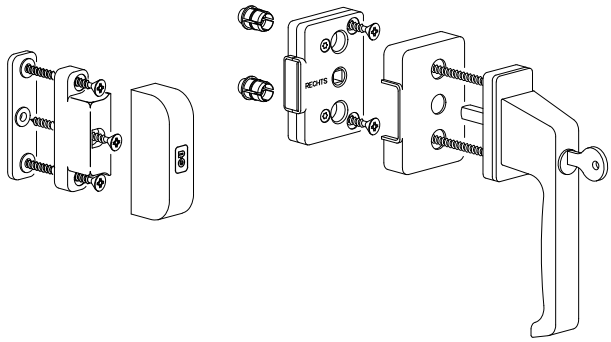

Box of face fixed window lock with turn handle DIRIGENT F/Z
EV 1 K-14662-00-0-11
dark brown K-14662-00-0-5
white K-14662-00-0-7

Contents of box

1 Turn handle DIRIGENT F/Z, lockable
1 Spindle 7 x 75 mm
1 Face fixed lock
1 Cover for face fixed lock
2 Sleeve for Ø 10 mm
2 Sleeve for Ø 12 mm
1 Strike box
1 Cover for strike box
1 Packing 3 mm
1 Packing 4 mm
1 Packing 5 mm
1 Packing 6 mm
7 Spax countersunk screw 5 x 55 mm

JET Slit ventilation catch

Slit ventilation catch

Cover

Catch plate

Fitting requirements JET Slit ventilation catch for aluminium windows

Quantity	Description	PU	Article No.
1	**JET Slit ventilation catch**, with sash overlap	10	K-12223-90-0-*
1	**JET Slit ventilation catch**, without sash overlap	10	K-12216-90-0-*
	Drilling jig	1	6-23861-00-0-0

Working drawing 0-38928

Tilt-turn, first tilt and side hung fittings

Mill-in gears

Mill-in gear 180°
with WOSD for tilt-turn and first tilt sashes
Backset 14 mm
6-30534-00-0-1

Mill-in gear 180°
without WOSD for side hung and tilt sashes
Backset 14 mm
6-31280-00-0-1

Mill-in gear 180°
without WOSD for side hung and tilt sashes
6-25916--0-1**

Mill-in gear 180°
with WOSD for tilt-turn and first tilt sashes
6-25917--0-1**

Lock
with cylinder bore
6-25918--0-1**

**** = Sizes**
25, 30, 35, 40, 45, 50

Limiting stay

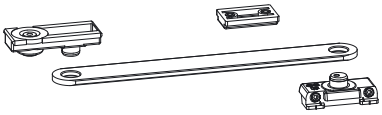

Bag of limiting stay with friction slider

Length	SW mm	PU	Article No.
150 mm	> 260	1	K-17138-15-0-1
250 mm	> 360	1	K-17138-25-0-1

Optional part

Illustration	Description	PU	Article No.
	**Adapter ring Ø 6 mm** for clip pin to push rod hole Ø 8 mm	1	9-45167-00-0-6

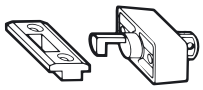

Bag of blocking lock
screw-on version – with key
K-12968-00-0-*
Working drawing 0-41185

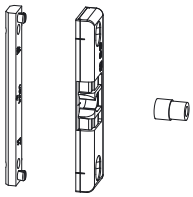

Bag of door catch
K-12962-00-0-1

Locking pin, single
A-02823-00-0-0

Carrier pin, single
push rod one-piece
G-14694-00-0-0

Carrier pin, single
push rod two-piece
G-11669-00-0-0

Fan-light catch for narrow sashes

Latch plate

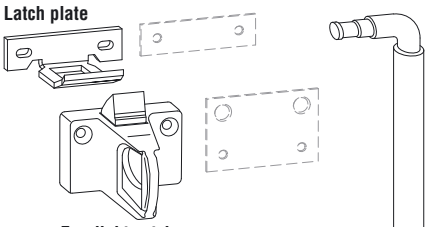

Fan-light catch

Bag of fan-light catch
for 6 mm overlap thickness

EV 1	**G-18413-00-0-1**
black	**G-18413-00-0-6**
withe	**G-18413-00-0-7**

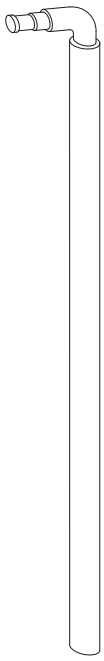

Operation rod 980 mm
G-12083-10-0-1

Packings for bag of fan-light catch [1]

Illustration	Application	Thickness mm	PU	Article No.
	Latch plate	0,5	1	E-12084-05-0-1
		1,0	1	E-12084-10-0-1
		3,0	1	E-12084-30-0-1
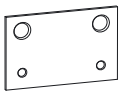	Fan-light catch	0,5	1	E-12071-05-0-1
		1,0	1	E-12071-10-0-1
		3,0	1	E-12071-30-0-1

[1] Not embodied in the bag of fan-light catch.

Locking plates

Description	Gasket pressure	Illustration	Frame groove 14/18 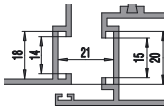	12/15 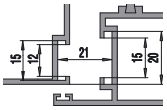	10/14 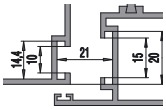
Tilt locking plate Tilt-turn and side hung sashes clampable	standard + 0,7 mm		6-30964-00-0-1 6-30964-01-0-1	6-30964-00-0-1 6-30964-01-0-1	6-30964-00-0-1 6-30964-01-0-1
Tilt locking plate First tilt sash clampable	standard		6-32287-00-0-1	6-32287-00-0-1	6-32287-00-0-1
Locking plate Frame profiles clampable	standard + 0,7 mm		6-30959-00-0-1 6-30959-01-0-1	6-30959-00-0-1 6-30959-01-0-1	6-30959-00-0-1 6-30959-01-0-1
Locking plate Frame profiles clampable	adjustable		G-11071-00-0-1	G-11800-00-0-1	G-11065-00-0-1
Locking plate for false mullion clampable	standard + 1,5 mm + 3,0 mm		6-30961-00-0-1 G-19658-02-0-1 G-19658-03-0-1	6-30961-00-0-1 G-19658-02-0-1 G-19658-03-0-1	6-30961-00-0-1 G-19658-02-0-1 G-19658-03-0-1
Supporting plate Tilt-turn sash clampable			6-31066-00-0-1	6-31066-00-0-1	6-31066-00-0-1
Wedge for frame First tilt and side hung sashes clampable			6-30998-00-0-1	6-30998-00-0-1	6-30998-00-0-1
Wedge for sash Tilt-turn, first tilt, side hung and inactive sashes clampable			9-40404-00-0-1	9-40404-00-0-1	9-40404-00-0-1

Window friction stay EGO-B, EGO-FL

Window friction stay EGO-B, EGO-FL

Description	SWR mm	PU	Article No.
Window friction stay EGO-B with sash restrictor from 5° and max. opening angle 90° for tilt-turn and side hung	500-750 751-	20 20	6-28835-01-0-1 6-28835-00-0-1
Window friction stay EGO-FL max. opening angle 90°, with swing free function up to 85° when opening and constant swing free function when closing the sash, for tilt-turn and side hung sashes	500-750 751-	20 20	6-28730-01-0-1 6-28730-00-0-1

Window friction stay EGO-B, EGO-FL
Bag of profile accessories

Description	PU	Article No.
Profile systems with frame groove 14/18, 12/15, 10/14 and sash groove 15/20 resp. fitting groove 16 mm Akotherm, Alco, Almaco, Alumil, Aluminco Brökelmann Domal Elvial, Erbslöh, Etem, Europa, Exalco Heroal Kawneer, Kubal Menziken Nordall Ponzio Redal, Remy Claeys, Reynolds Sykon Thyssen Schulte, TS-Aluminium VAW	20	K-14686-00-0-1
Profile systems Hartmann, Hueck MKF TKI Schüco	20	K-14684-00-0-1
Profile system Wicona	20	K-14685-00-0-1

Windows and patio doors with geared handle

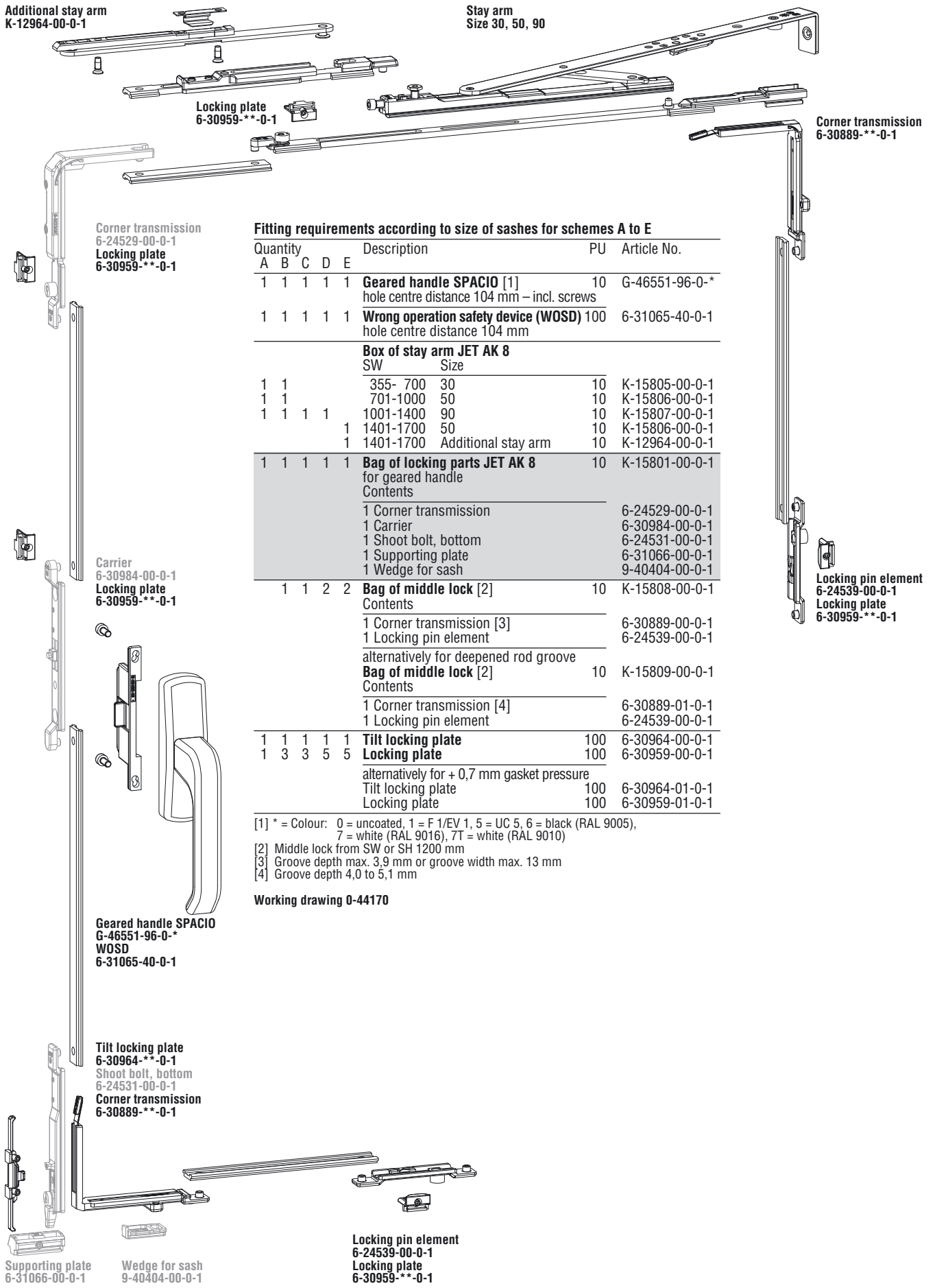

Fitting requirements according to size of sashes for schemes A to E

Quantity A	B	C	D	E	Description	PU	Article No.
1	1	1	1	1	**Geared handle SPACIO** [1] hole centre distance 104 mm – incl. screws	10	G-46551-96-0-*
1	1	1	1	1	**Wrong operation safety device (WOSD)** hole centre distance 104 mm	100	6-31065-40-0-1
					Box of stay arm JET AK 8 SW Size		
1	1				355- 700 30	10	K-15805-00-0-1
1	1				701-1000 50	10	K-15806-00-0-1
1	1	1	1		1001-1400 90	10	K-15807-00-0-1
				1	1401-1700 50	10	K-15806-00-0-1
				1	1401-1700 Additional stay arm	10	K-12964-00-0-1
1	1	1	1	1	**Bag of locking parts JET AK 8** for geared handle Contents	10	K-15801-00-0-1
					1 Corner transmission		6-24529-00-0-1
					1 Carrier		6-30984-00-0-1
					1 Shoot bolt, bottom		6-24531-00-0-1
					1 Supporting plate		6-31066-00-0-1
					1 Wedge for sash		9-40404-00-0-1
	1	1	2	2	**Bag of middle lock** [2] Contents	10	K-15808-00-0-1
					1 Corner transmission [3]		6-30889-00-0-1
					1 Locking pin element		6-24539-00-0-1
					alternatively for deepened rod groove **Bag of middle lock** [2] Contents	10	K-15809-00-0-1
					1 Corner transmission [4]		6-30889-01-0-1
					1 Locking pin element		6-24539-00-0-1
1	1	1	1	1	**Tilt locking plate**	100	6-30964-00-0-1
1	3	3	5	5	**Locking plate**	100	6-30959-00-0-1
					alternatively for + 0,7 mm gasket pressure		
					Tilt locking plate	100	6-30964-01-0-1
					Locking plate	100	6-30959-01-0-1

[1] * = Colour: 0 = uncoated, 1 = F 1/EV 1, 5 = UC 5, 6 = black (RAL 9005), 7 = white (RAL 9016), 7T = white (RAL 9010)
[2] Middle lock from SW or SH 1200 mm
[3] Groove depth max. 3,9 mm or groove width max. 13 mm
[4] Groove depth 4,0 to 5,1 mm

Working drawing 0-44170

Windows and patio doors with mill-in gear

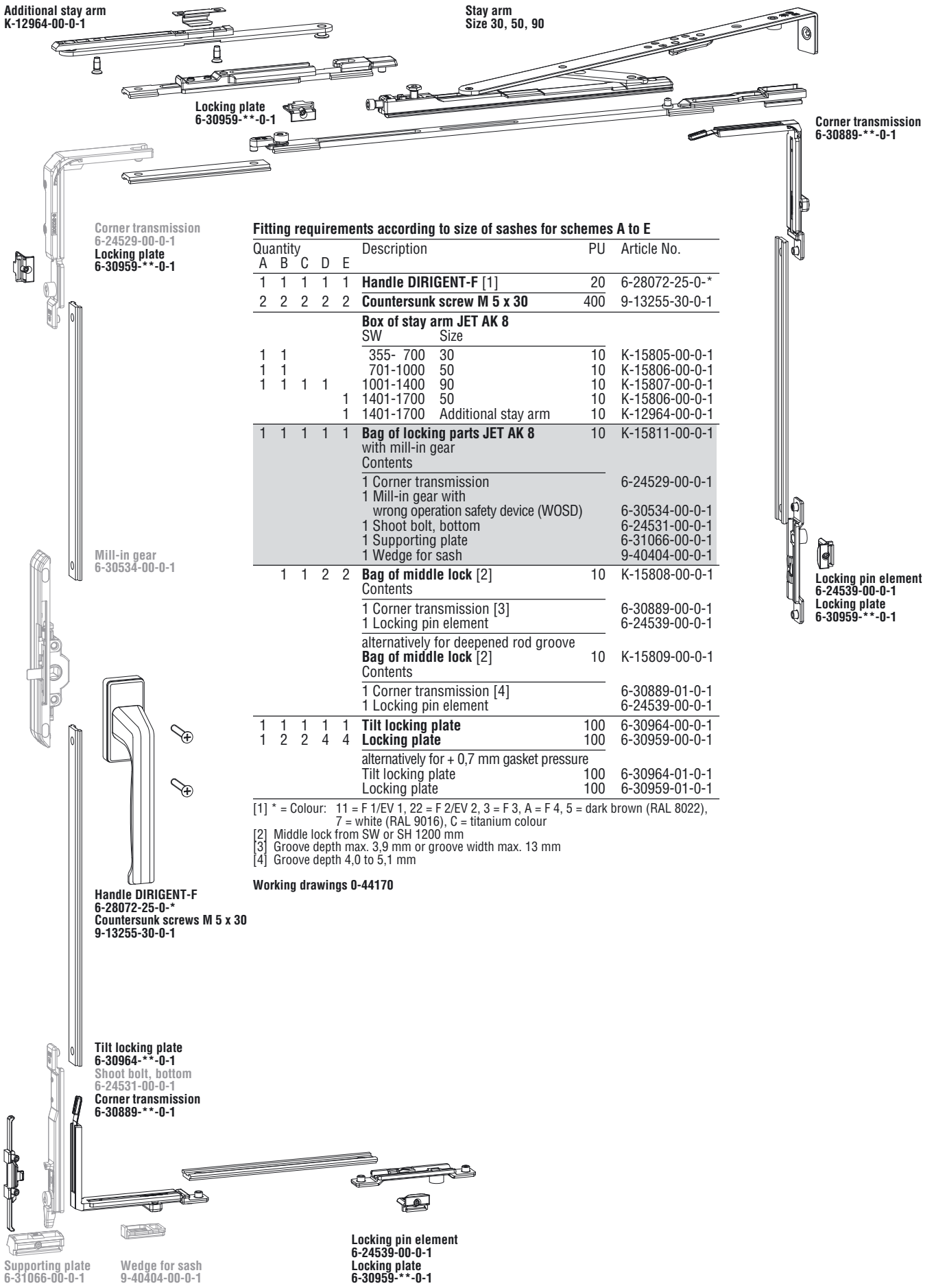

Fitting requirements according to size of sashes for schemes A to E

Quantity A	B	C	D	E	Description		PU	Article No.
1	1	1	1	1	**Handle DIRIGENT-F** [1]		20	6-28072-25-0-*
2	2	2	2	2	**Countersunk screw M 5 x 30**		400	9-13255-30-0-1
					Box of stay arm JET AK 8			
					SW	Size		
1	1				355- 700	30	10	K-15805-00-0-1
1	1				701-1000	50	10	K-15806-00-0-1
1	1	1	1		1001-1400	90	10	K-15807-00-0-1
				1	1401-1700	50	10	K-15806-00-0-1
				1	1401-1700	Additional stay arm	10	K-12964-00-0-1
1	1	1	1	1	**Bag of locking parts JET AK 8** with mill-in gear		10	K-15811-00-0-1
					Contents			
					1 Corner transmission			6-24529-00-0-1
					1 Mill-in gear with wrong operation safety device (WOSD)			6-30534-00-0-1
					1 Shoot bolt, bottom			6-24531-00-0-1
					1 Supporting plate			6-31066-00-0-1
					1 Wedge for sash			9-40404-00-0-1
	1	1	2	2	**Bag of middle lock** [2]		10	K-15808-00-0-1
					Contents			
					1 Corner transmission [3]			6-30889-00-0-1
					1 Locking pin element			6-24539-00-0-1
					alternatively for deepened rod groove **Bag of middle lock** [2]		10	K-15809-00-0-1
					Contents			
					1 Corner transmission [4]			6-30889-01-0-1
					1 Locking pin element			6-24539-00-0-1
1	1	1	1	1	**Tilt locking plate**		100	6-30964-00-0-1
1	2	2	4	4	**Locking plate**		100	6-30959-00-0-1
					alternatively for + 0,7 mm gasket pressure			
					Tilt locking plate		100	6-30964-01-0-1
					Locking plate		100	6-30959-01-0-1

[1] * = Colour: 11 = F 1/EV 1, 22 = F 2/EV 2, 3 = F 3, A = F 4, 5 = dark brown (RAL 8022), 7 = white (RAL 9016), C = titanium colour
[2] Middle lock from SW or SH 1200 mm
[3] Groove depth max. 3,9 mm or groove width max. 13 mm
[4] Groove depth 4,0 to 5,1 mm

Working drawings 0-44170

Windows and patio doors with geared handle

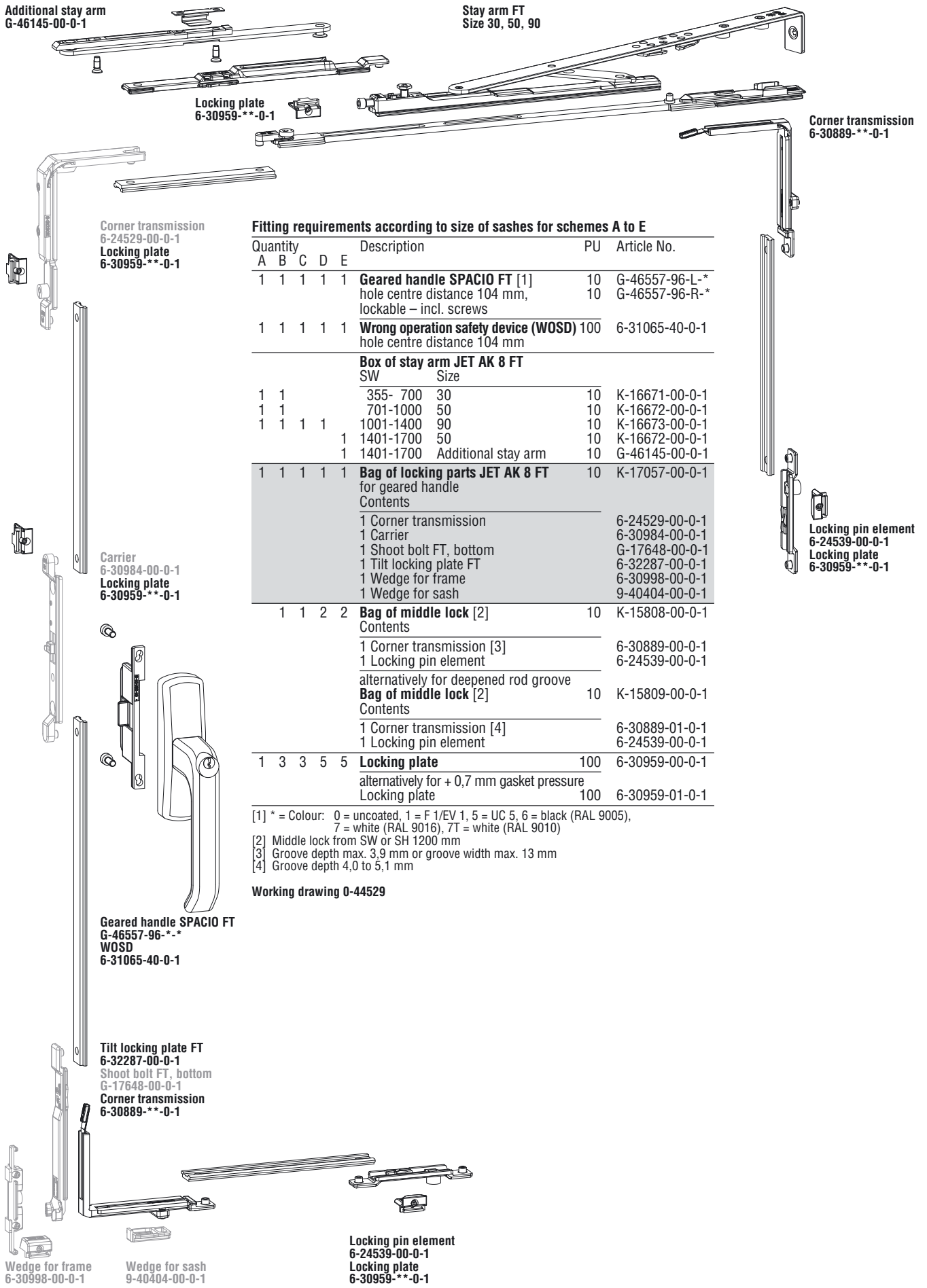

Fitting requirements according to size of sashes for schemes A to E

Quantity A	B	C	D	E	Description	PU	Article No.
1	1	1	1	1	**Geared handle SPACIO FT** [1]	10	G-46557-96-L-*
					hole centre distance 104 mm,	10	G-46557-96-R-*
					lockable – incl. screws		
1	1	1	1	1	**Wrong operation safety device (WOSD)**	100	6-31065-40-0-1
					hole centre distance 104 mm		
					Box of stay arm JET AK 8 FT		
					SW Size		
1	1				355- 700 30	10	K-16671-00-0-1
1	1				701-1000 50	10	K-16672-00-0-1
1	1	1	1		1001-1400 90	10	K-16673-00-0-1
				1	1401-1700 50	10	K-16672-00-0-1
				1	1401-1700 Additional stay arm	10	G-46145-00-0-1
1	1	1	1	1	**Bag of locking parts JET AK 8 FT**	10	K-17057-00-0-1
					for geared handle		
					Contents		
					1 Corner transmission		6-24529-00-0-1
					1 Carrier		6-30984-00-0-1
					1 Shoot bolt FT, bottom		G-17648-00-0-1
					1 Tilt locking plate FT		6-32287-00-0-1
					1 Wedge for frame		6-30998-00-0-1
					1 Wedge for sash		9-40404-00-0-1
	1	1	2	2	**Bag of middle lock** [2]	10	K-15808-00-0-1
					Contents		
					1 Corner transmission [3]		6-30889-00-0-1
					1 Locking pin element		6-24539-00-0-1
					alternatively for deepened rod groove		
					Bag of middle lock [2]	10	K-15809-00-0-1
					Contents		
					1 Corner transmission [4]		6-30889-01-0-1
					1 Locking pin element		6-24539-00-0-1
1	3	3	5	5	**Locking plate**	100	6-30959-00-0-1
					alternatively for + 0,7 mm gasket pressure		
					Locking plate	100	6-30959-01-0-1

[1] * = Colour: 0 = uncoated, 1 = F 1/EV 1, 5 = UC 5, 6 = black (RAL 9005), 7 = white (RAL 9016), 7T = white (RAL 9010)
[2] Middle lock from SW or SH 1200 mm
[3] Groove depth max. 3,9 mm or groove width max. 13 mm
[4] Groove depth 4,0 to 5,1 mm

Working drawing 0-44529

Windows and patio doors with mill-in gear

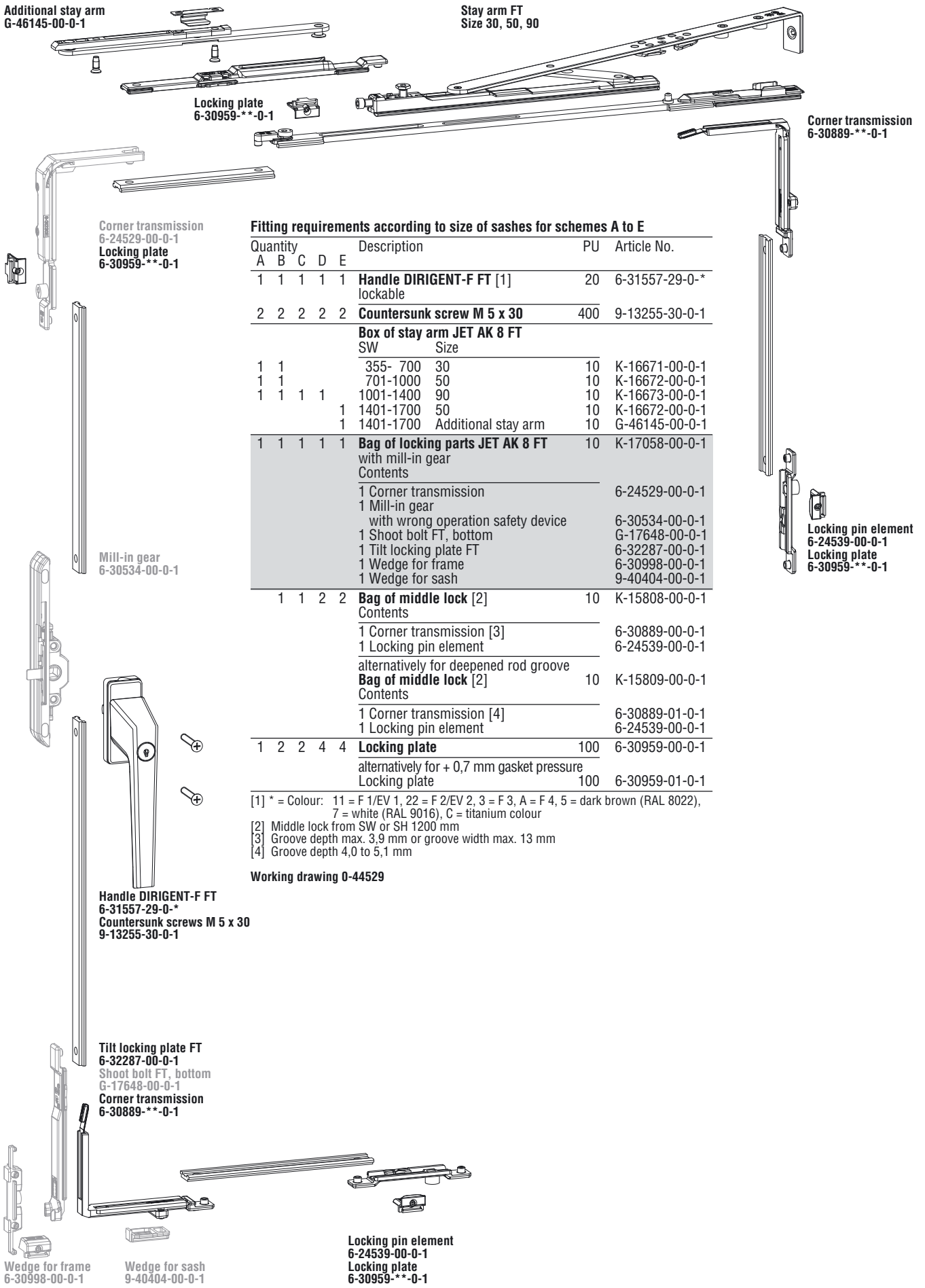

Fitting requirements according to size of sashes for schemes A to E

Quantity A	B	C	D	E	Description	PU	Article No.
1	1	1	1	1	**Handle DIRIGENT-F FT** [1] lockable	20	6-31557-29-0-*
2	2	2	2	2	**Countersunk screw M 5 x 30**	400	9-13255-30-0-1
					Box of stay arm JET AK 8 FT SW / Size		
1	1				355- 700 / 30	10	K-16671-00-0-1
1	1				701-1000 / 50	10	K-16672-00-0-1
1	1	1	1		1001-1400 / 90	10	K-16673-00-0-1
				1	1401-1700 / 50	10	K-16672-00-0-1
				1	1401-1700 / Additional stay arm	10	G-46145-00-0-1
1	1	1	1	1	**Bag of locking parts JET AK 8 FT** with mill-in gear Contents	10	K-17058-00-0-1
					1 Corner transmission		6-24529-00-0-1
					1 Mill-in gear with wrong operation safety device		6-30534-00-0-1
					1 Shoot bolt FT, bottom		G-17648-00-0-1
					1 Tilt locking plate FT		6-32287-00-0-1
					1 Wedge for frame		6-30998-00-0-1
					1 Wedge for sash		9-40404-00-0-1
	1	1	2	2	**Bag of middle lock** [2] Contents	10	K-15808-00-0-1
					1 Corner transmission [3]		6-30889-00-0-1
					1 Locking pin element		6-24539-00-0-1
					alternatively for deepened rod groove **Bag of middle lock** [2] Contents	10	K-15809-00-0-1
					1 Corner transmission [4]		6-30889-01-0-1
					1 Locking pin element		6-24539-00-0-1
1	2	2	4	4	**Locking plate**	100	6-30959-00-0-1
					alternatively for + 0,7 mm gasket pressure Locking plate	100	6-30959-01-0-1

[1] * = Colour: 11 = F 1/EV 1, 22 = F 2/EV 2, 3 = F 3, A = F 4, 5 = dark brown (RAL 8022), 7 = white (RAL 9016), C = titanium colour
[2] Middle lock from SW or SH 1200 mm
[3] Groove depth max. 3,9 mm or groove width max. 13 mm
[4] Groove depth 4,0 to 5,1 mm

Working drawing 0-44529

Windows and patio doors with geared handle

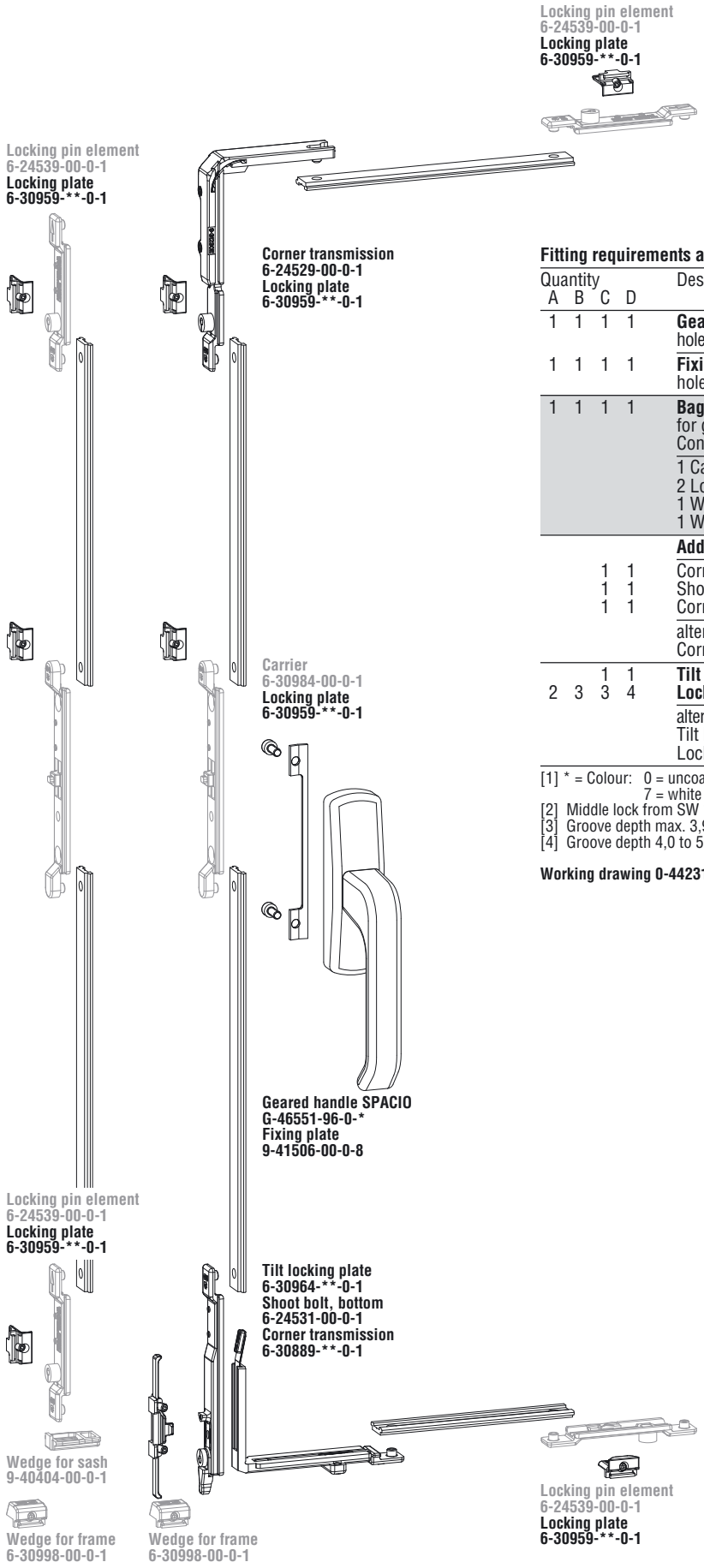

Fitting requirements according to size of sashes for schemes A to D

Quantity A	B	C	D	Description	PU	Article No.
1	1	1	1	**Geared handle SPACIO** [1] hole centre distance 104 mm – with screws	10	G-46551-96-0-*
1	1	1	1	**Fixing plate** hole centre distance 104 mm	50	9-41506-00-0-8
1	1	1	1	**Bag of locking parts DF JET AK 8** for geared handle Contents	10	K-15802-00-0-1
				1 Carrier		6-30984-00-0-1
				2 Locking pin elements		6-24539-00-0-1
				1 Wedge for frame		6-30998-00-0-1
				1 Wedge for sash		9-40404-00-0-1
				Additional parts for middle lock [2]		
		1	1	Corner transmission	100	6-24529-00-0-1
		1	1	Shoot bolt, bottom	100	6-24531-00-0-1
		1	1	Corner transmission [3]	100	6-30889-00-0-1
				alternatively for deepened rod groove Corner transmission [4]	100	6-30889-01-0-1
		1	1	**Tilt locking plate**	100	6-30964-00-0-1
2	3	3	4	**Locking plate**	100	6-30959-00-0-1
				alternatively for + 0,7 mm gasket pressure Tilt locking plate	100	6-30964-01-0-1
				Locking plate	100	6-30959-01-0-1

[1] * = Colour: 0 = uncoated, 1 = F 1/EV 1, 5 = UC 5, 6 = black (RAL 9005), 7 = white (RAL 9016), 7T = white (RAL 9010)
[2] Middle lock from SW 1200 mm
[3] Groove depth max. 3,9 mm or groove width max. 13 mm
[4] Groove depth 4,0 to 5,1 mm

Working drawing 0-44231

Windows and patio doors with mill-in gear

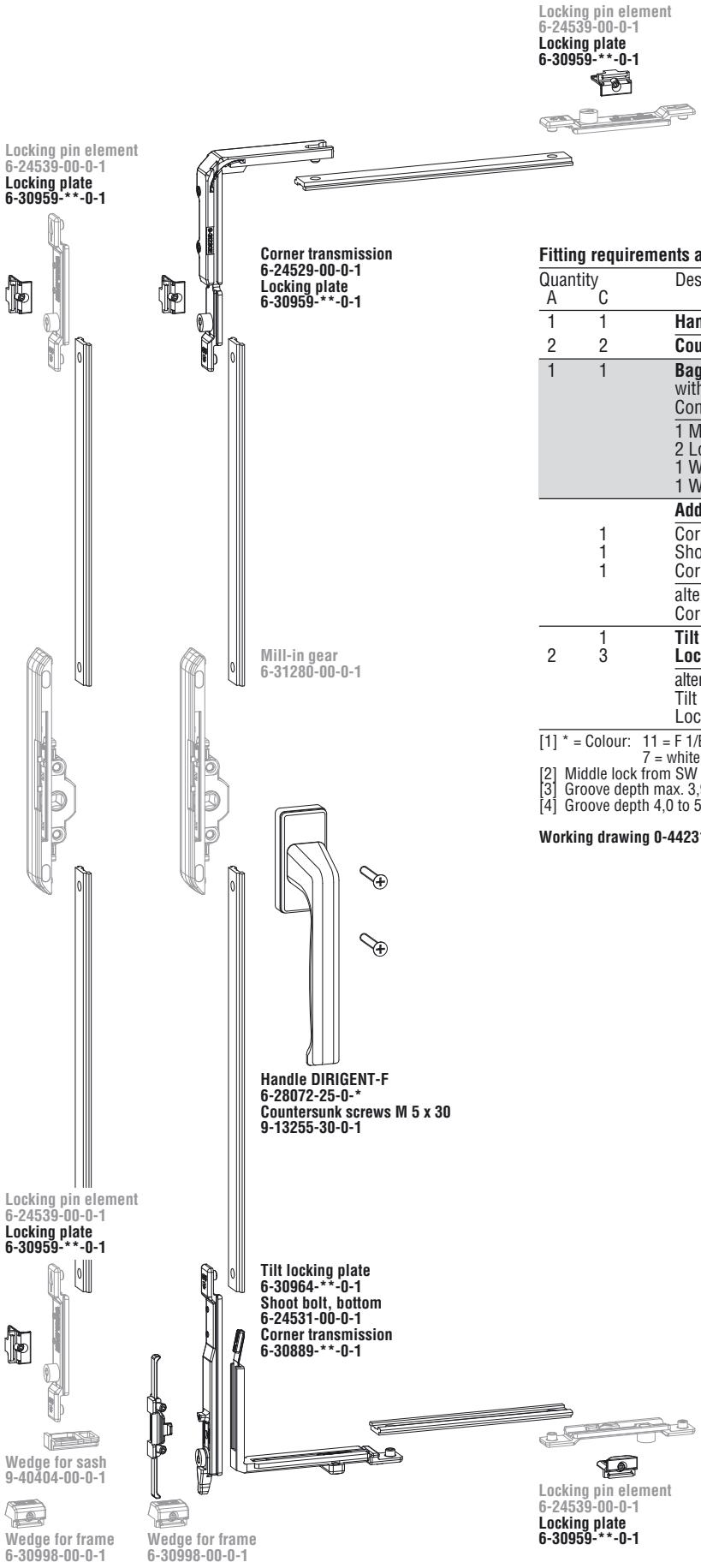

Fitting requirements according to size of sashes for schemes A and C

Quantity A	Quantity C	Description	PU	Article No.
1	1	**Handle DIRIGENT-F** [1]	20	6-28072-25-0-*
2	2	**Countersunk screw M 5 x 30**	400	9-13255-30-0-1
1	1	**Bag of locking parts DF JET AK 8** with mill-in gear	10	K-15812-00-0-1
		Contents		
		1 Mill-in gear		6-31280-00-0-1
		2 Locking pin elements		6-24539-00-0-1
		1 Wedge for frame		6-30998-00-0-1
		1 Wedge for sash		9-40404-00-0-1
		Additional parts for middle lock [2]		
	1	Corner transmission	100	6-24529-00-0-1
	1	Shoot bolt, bottom	100	6-24531-00-0-1
	1	Corner transmission [3]	100	6-30889-00-0-1
		alternatively for deepened rod groove		
		Corner transmission [4]	100	6-30889-01-0-1
	1	**Tilt locking plate**	100	6-30964-00-0-1
2	3	**Locking plate**	100	6-30959-00-0-1
		alternatively for + 0,7 mm gasket pressure		
		Tilt locking plate	100	6-30964-01-0-1
		Locking plate	100	6-30959-01-0-1

[1] * = Colour: 11 = F 1/EV 1, 22 = F 2/EV 2, 3 = F 3, A = F 4, 5 = dark brown (RAL 8022), 7 = white (RAL 9016), C = titanium colour
[2] Middle lock from SW 1200 mm
[3] Groove depth max. 3,9 mm or groove width max. 13 mm
[4] Groove depth 4,0 to 5,1 mm

Working drawing 0-44231

Windows and patio doors with inactive sash gear or shoot bolts – false mullion profile with single groove

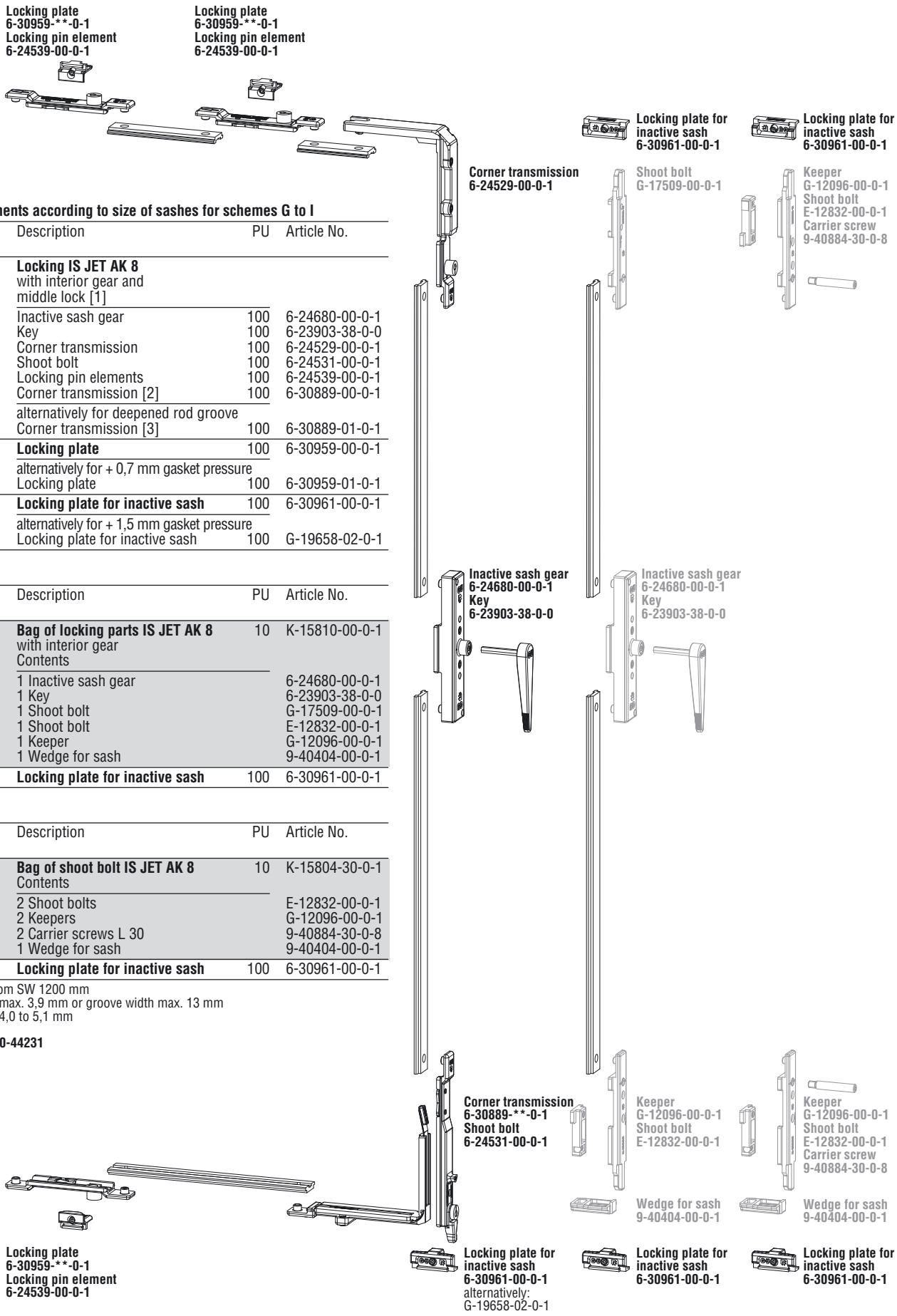

Fitting requirements according to size of sashes for schemes G to I

Quantity G H I	Description	PU	Article No.
	Locking IS JET AK 8 with interior gear and middle lock [1]		
1	Inactive sash gear	100	6-24680-00-0-1
1	Key	100	6-23903-38-0-0
1	Corner transmission	100	6-24529-00-0-1
1	Shoot bolt	100	6-24531-00-0-1
3	Locking pin elements	100	6-24539-00-0-1
1	Corner transmission [2]	100	6-30889-00-0-1
	alternatively for deepened rod groove Corner transmission [3]	100	6-30889-01-0-1
3	**Locking plate**	100	6-30959-00-0-1
	alternatively for + 0,7 mm gasket pressure Locking plate	100	6-30959-01-0-1
1	**Locking plate for inactive sash**	100	6-30961-00-0-1
	alternatively for + 1,5 mm gasket pressure Locking plate for inactive sash	100	G-19658-02-0-1

Quantity G H I	Description	PU	Article No.
1	**Bag of locking parts IS JET AK 8** with interior gear Contents	10	K-15810-00-0-1
	1 Inactive sash gear		6-24680-00-0-1
	1 Key		6-23903-38-0-0
	1 Shoot bolt		G-17509-00-0-1
	1 Shoot bolt		E-12832-00-0-1
	1 Keeper		G-12096-00-0-1
	1 Wedge for sash		9-40404-00-0-1
2	**Locking plate for inactive sash**	100	6-30961-00-0-1

Quantity G H I	Description	PU	Article No.
1	**Bag of shoot bolt IS JET AK 8** Contents	10	K-15804-30-0-1
	2 Shoot bolts		E-12832-00-0-1
	2 Keepers		G-12096-00-0-1
	2 Carrier screws L 30		9-40884-30-0-8
	1 Wedge for sash		9-40404-00-0-1
2	**Locking plate for inactive sash**	100	6-30961-00-0-1

[1] Middle lock from SW 1200 mm
[2] Groove depth max. 3,9 mm or groove width max. 13 mm
[3] Groove depth 4,0 to 5,1 mm

Working drawing 0-44231

Windows and patio doors with rebate shoot bolt or shoot bolts – false mullion profile with double groove

Fitting requirements for schemes G and I

Quantity G	Quantity I	Description	PU	Article No.
1		**Bag of locking parts IS JET AK 8** with rebate shoot bolt	10	K-15803-00-0-1
		Contents		
		1 Rebate shoot bolt		6-31015-00-0-1
		2 Shoot bolts		6-31038-00-0-1
		1 Wedge for sash		9-40404-00-0-1
2		**Push rod** L = 1600 mm	1	9-40859-16-0-1
2		**Locking plate for inactive sash**	100	6-30961-00-0-1
		alternatively for increased pressure		
		Locking plate + 1,5 mm	100	G-19658-02-0-1
		Locking plate + 3,0 mm	100	G-19658-03-0-1

Quantity G	Quantity I	Description	PU	Article No.
	2	**Box of slide IS JET AK 8** for shoot bolt JET AK 8	50	K-15816-00-0-1
		Contents		
		1 Slide		9-41514-00-0-1
		1 Stop for slide		6-31726-00-0-1
	1	**Bag of shoot rods IS JET AK 8** for slides JET AK 8	20	K-15818-00-0-1
		Contents		
		1 Shoot rod 125 mm		9-41479-12-0-1
		1 Shoot rod 400 mm		9-41479-40-0-1
	2	**Locking plate for inactive sash**	100	6-30961-00-0-1
		alternatively for increased gasket pressure		
		Locking plate + 1,5 mm	100	G-19658-02-0-1
		Locking plate + 3,0 mm	100	G-19658-03-0-1

Working drawing 0-44231

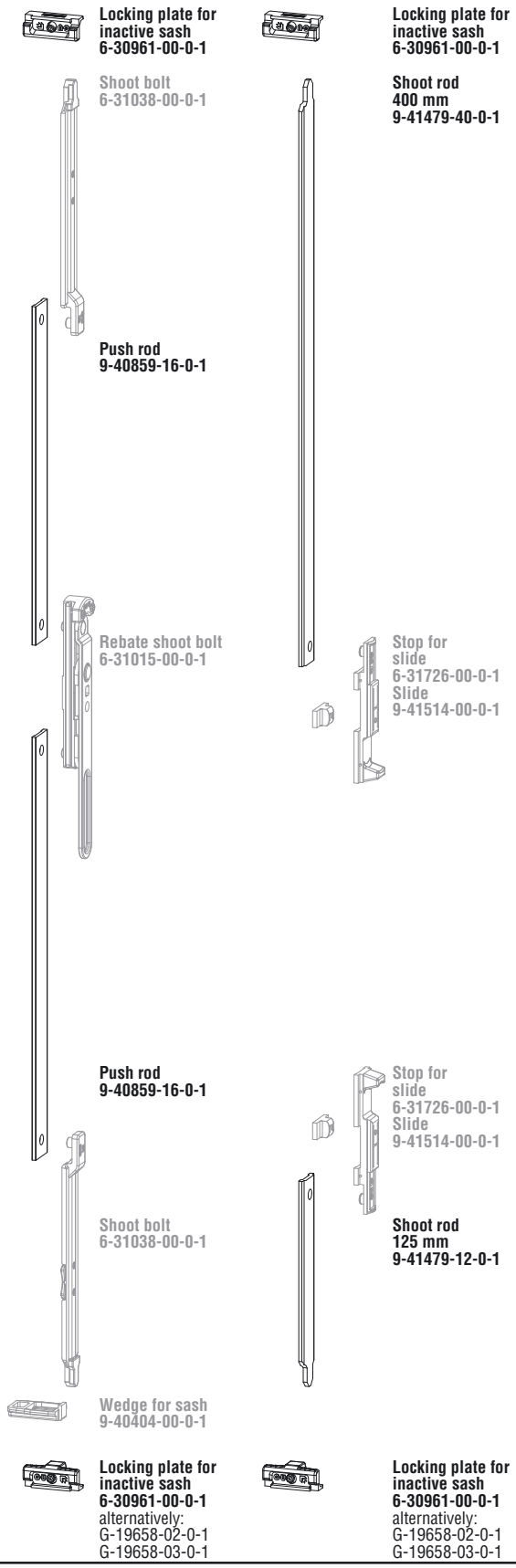

Windows and patio doors with shoot bolts – false mullion profile with double groove
Frame groove 14/18

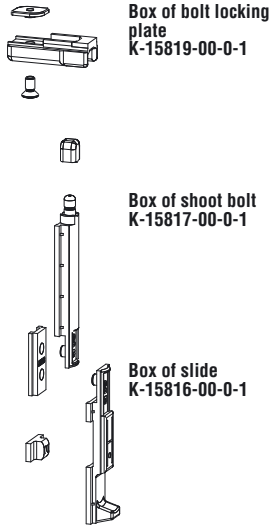

Fitting requirements for schemes I

Quantity I	Description	PU	Article No.
2	**Box of slide IS JET AK 8** for shoot bolt JET AK 8 Contents	50	K-15816-00-0-1
	1 Slide 1 Stop for slide 1 Connecting piece		9-41514-00-0-1 6-31726-00-0-1 9-41529-00-0-1
2	**Box of shoot bolt** Contents	50	K-15817-00-0-1
	1 Shoot bolt 1 Eccentric cover		6-31727-00-0-1 9-41515-00-0-1
2	**Box of bolt locking plate 14/18** Contents	100	K-15819-00-0-1
	1 Bolt locking plate 1 Groove piece 1 Lens head countersunk screw M 5 x 10		9-41516-00-0-1 9-41517-00-0-1 9-13369-10-R-1

Working drawing 0-44231

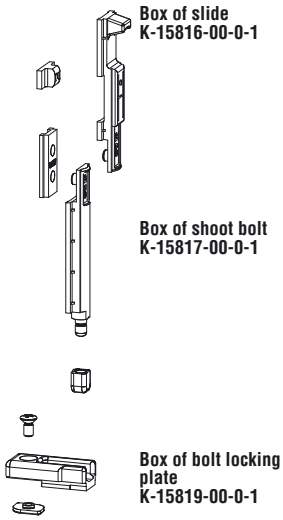

Windows and patio doors with shoot bolts and geared handle
Frame groove 14/18

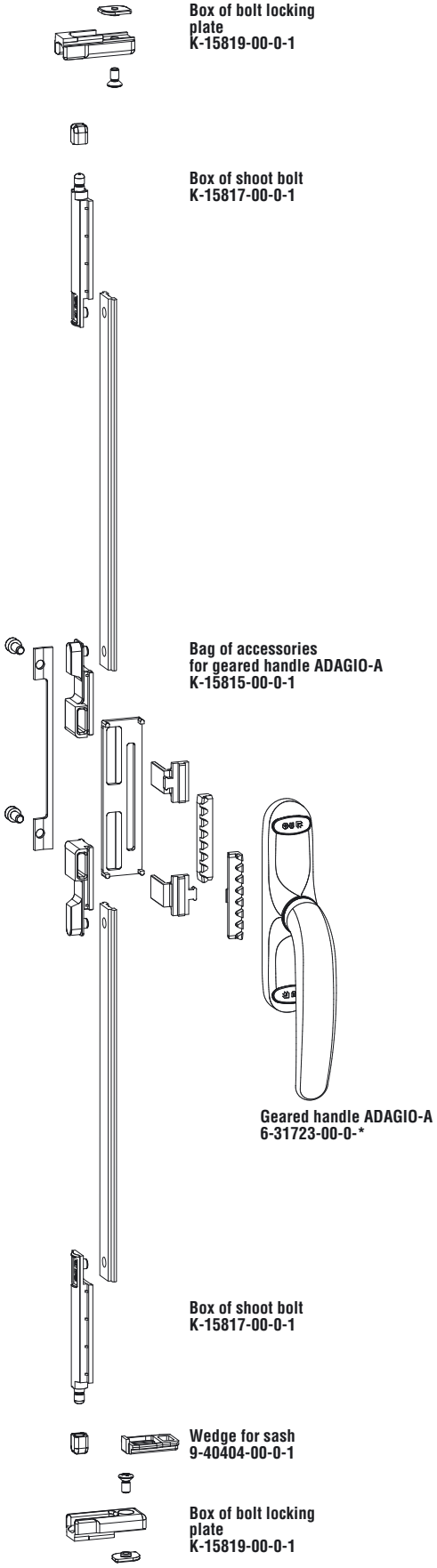

Fitting requirements for schemes A1

Quantity A1	Description	PU	Article No.
1	**Geared handle ADAGIO-A** [1]	50	6-31723-00-0-*
1	**Bag of accessories** incl. screws for ADAGIO-A	50	K-15815-00-0-1
2	**Box of shoot bolt** Contents	50	K-15817-00-0-1
	1 Shoot bolt 1 Eccentric cover		6-31727-00-0-1 9-41515-00-0-1
2	**Box of bolt locking plate 14/18** Contents	100	K-15819-00-0-1
	1 Bolt locking plate 1 Groove piece 1 Lens head countersunk screw M 5 x 10		9-41516-00-0-1 9-41517-00-0-1 9-13369-10-R-1
1	**Wedge for sash**	100	9-40404-00-0-1

[1] * = Colour: 0 = uncoated, 1 = F 1/EV 1, 5 = UC 5, 6 = black (RAL 9005), 7 = white (RAL 9016), 7T = white (RAL 9010)

Working drawing 0-44231

Windows with geared handle

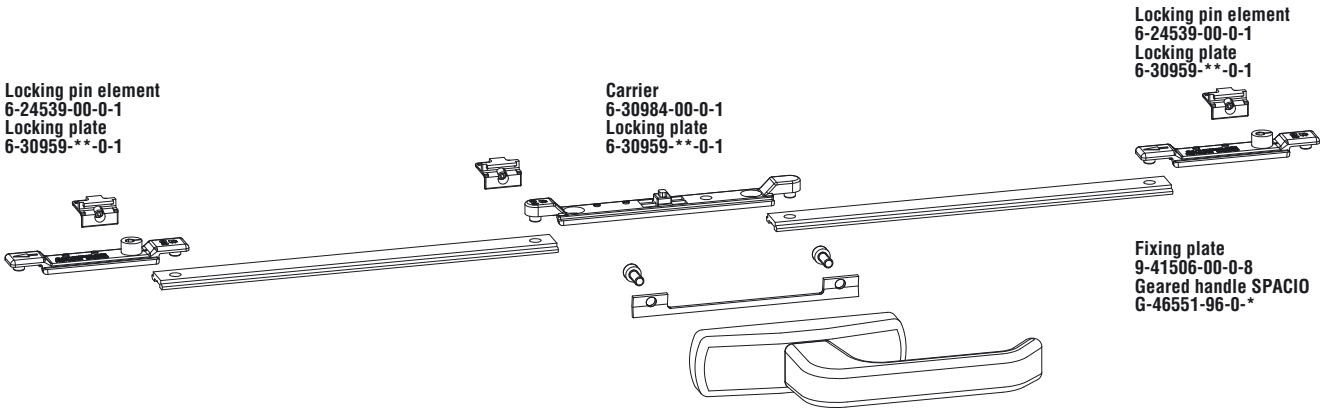

Fitting requirements according to size of sashes

Quantity	Description	PU	Article No.
1	**Geared handle SPACIO** [1] hole centre distance 104 mm – with screws	10	G-46551-96-0-*
1	**Fixing plate** hole centre distance 104 mm	50	9-41506-00-0-8
1	**Carrier**	100	6-30984-00-0-1
2	**Locking pin element**	100	6-24539-00-0-1
3	**Locking plate**	100	6-30959-00-0-1
	alternatively for + 0,7 mm gasket pressure Locking plate	100	6-30959-01-0-1
2	**Bag of limiting stay with friction slider** Stay arm length mm		
	150	1	K-17138-15-0-1
	250	1	K-17138-25-0-1

[1] * = Colour: 0 = uncoated, 1 = F 1/EV 1, 5 = UC 5, 6 = black (RAL 9005),
7 = white (RAL 9016), 7T = white (RAL 9010)

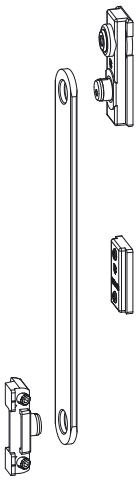

Limiting stay with friction slider

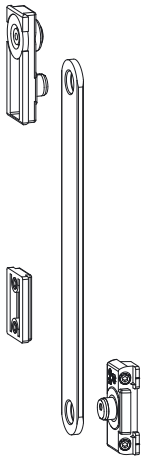

Limiting stay with friction slider

Windows with mill-in gear

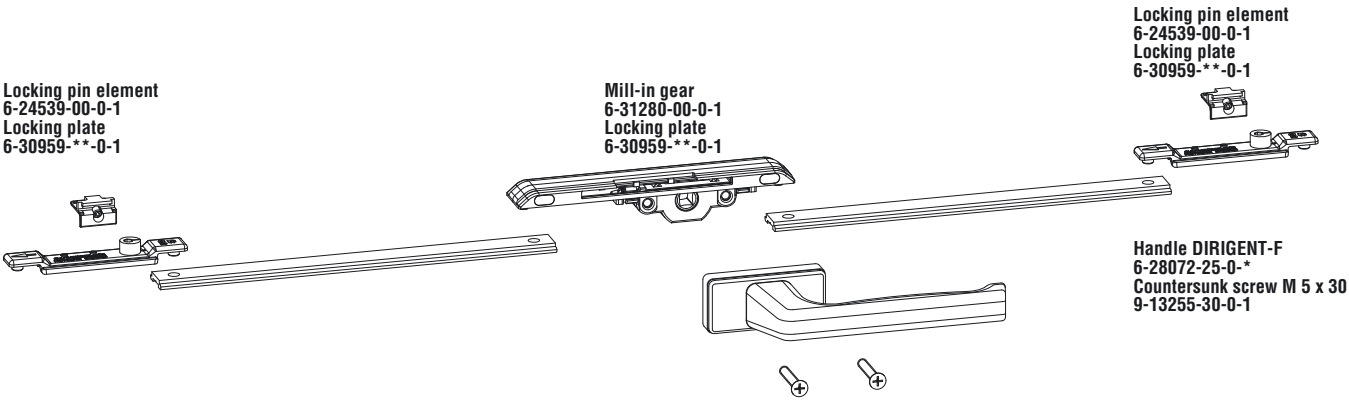

Fitting requirements according to size of sashes

Quantity	Description	PU	Article No.
1	**Handle DIRIGENT-F** [1]	20	6-28072-25-0-*
2	**Countersunk screw M 5 x 30**	400	9-13255-30-0-1
1	**Mill-in gear**	100	6-31280-00-0-1
2	**Locking pin element**	100	6-24539-00-0-1
3	**Locking plate**	100	6-30959-00-0-1
	alternatively for + 0,7 mm gasket pressure Locking plate	100	6-30959-01-0-1
2	**Bag of limiting stay with friction slider** Stay arm length mm		
	150	1	K-17138-15-0-1
	250	1	K-17138-25-0-1

] * = Colour: 11 = F 1/EV 1, 22 = F 2/EV 2, 3 = F 3, A = F 4, 5 = dark brown (RAL 8022), 7 = white (RAL 9016), C = titanium colour

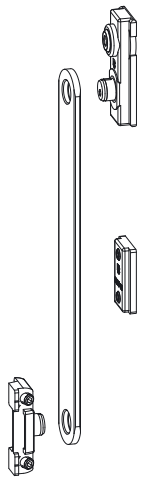

Limiting stay with friction slider

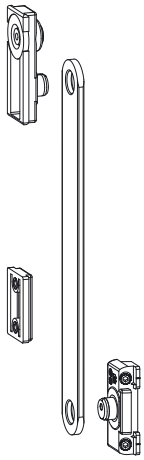

Limiting stay with friction slider

Tilt-turn, first tilt, side hung and inactive sash fittings

Tilt-turn, first tilt, side hung and inactive sashes

Fitting requirements for schemes A to I

Qty.	Description		PU	Article No.
1	**Bag of hinge side fittings** [1]			
	Frame groove	14/18	10	K-15800-00-0-*
		12/15	10	K-16668-00-0-*
		10/14	10	K-16667-00-0-*
	Contents			
	1 Stay arm bearing [1]			6-30875-00-0-*
	1 Stay arm bearing axle			6-30874-00-0-6
	1 Stay arm hinge [1]			6-31088-00-0-*
	1 Bearing sleeve			9-39805-00-0-6
	2 Covers			9-39807-00-0-6
	1 Corner bearing [1]			9-39812-00-0-*
	1 Casing for corner bearing	14/18		6-30872-00-0-1
		12/15		6-32056-00-0-1
		10/14		6-32055-00-0-1
	1 Corner bearing axle			6-31087-00-0-6
	1 Corner hinge [1]			6-31073-00-0-*
	1 Clamping angle			6-30873-00-0-1
	2 Countersunk screws			9-13489-12-R-8
1	**Bag of additional parts – 130 kg** [1] for sash weight > 80 kg		10	K-16595-00-0-*
	Contents			
	1 Stay arm bearing 130 [1]			9-41710-00-0-*
	1 Stay arm bearing axle 130			9-39809-01-0-6
	1 Countersunk screw M 5 x 16			9-33841-16-R-8

[1] * = Colour: 0 = uncoated, 1 = F 1/EV 1, 6 = black (RAL 9005), 7 = white (RAL 9016), 7T = white (RAL 9010)

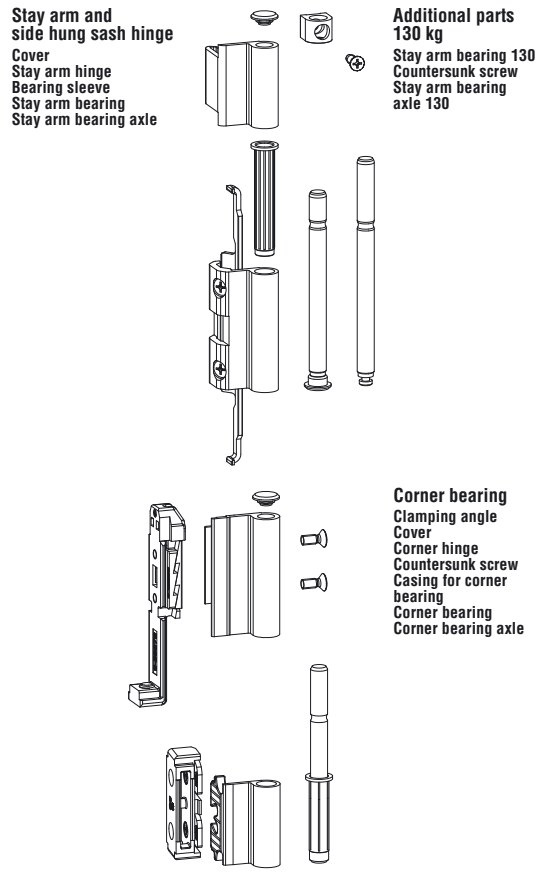

Side hung and inactive sashes with side hung sash hinge, adjustable

Fitting requirements for schemes A to I

Qty.	Description	PU	Article No.
1	**Side hung sash hinge,** adjustable additional to bag of hinge side K-15800-00-0-*, K-16668-00-0-* and K-16667-00-0-*	10	6-31064-00-0-1

Middle hinges for side hung and inactive sashes

Fitting requirements for schemes A to I

Qty.	Description		PU	Article No.
1	**Bag of middle hinge** [1]		10	K-16897-00-0-*
	Contents			
	1 Stay arm bearing [1]			6-31591-18-0-*
	1 Stay arm bearing axle			6-30874-00-0-6
	1 Side hung sash hinge [1]			6-32249-00-0-*
	1 Clamping plate			9-42376-02-0-1
	1 Bearing sleeve			9-39805-00-0-6
	1 Cover			9-39807-00-0-6
	2 Countersunk screws			9-13489-10-R-8
1	**Bag of concealed middle hinge**			
	Frame groove	14/18	10	G-13529-00-0-1
		12/15	10	G-13528-00-0-1
		10/14	10	G-13527-00-0-1
	Contents			
	1 Rebate cam plate			G-13450-00-0-1
	1 Cam plate	14/18		G-13452-00-0-1
		12/15		G-13453-00-0-1
		10/14		G-13451-00-0-1

[1] * = Colour: 0 = uncoated, 1 = F 1/EV 1, 6 = black (RAL 9005), 7 = white (RAL 9016), 7T = white (RAL 9010)

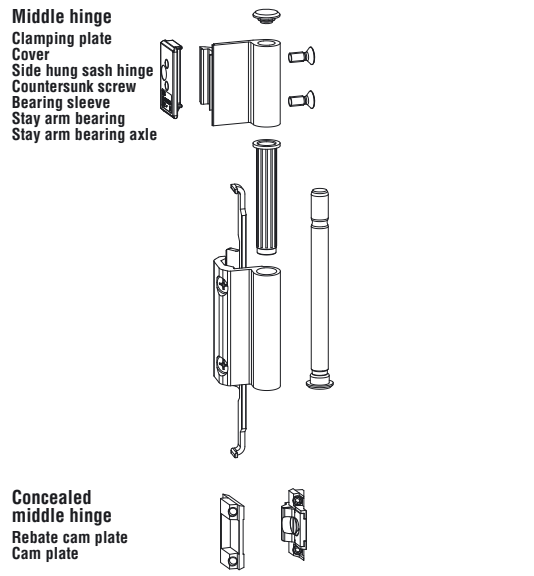

Working drawings

Tilt-turn sash	**0-44170**
First tilt sash	**0-44529**
Side hung and inactive sash	**0-44231**

Side hung and inactive sash fittings

Side hung and inactive sashes with clampable side hung sash hinge

Fitting requirements for schemes A to I

Qty.	Description		PU	Article No.
1	**Bag of hinge side** [1]			
	Frame groove	14/18	10	K-17181-00-0-*
		10/14	10	K-17182-00-0-*
	Contents			
	1 Stay arm bearing [1]			6-31591-18-0-*
	1 Stay arm bearing axle			6-30874-00-0-6
	1 Side hung sash hinge [1]			6-32249-00-0-*
	1 Clamping plate			9-42376-01-0-1
	1 Bearing sleeve			9-39805-00-0-6
	2 Covers			9-39807-00-0-6
	1 Corner bearing [1]			9-39812-00-0-*
	1 Casing for corner bearing	14/18		6-30872-00-0-1
		10/14		6-32055-00-0-1
	1 Corner bearing axle			6-31087-00-0-6
	1 Corner hinge [1]			6-31073-00-0-*
	1 Clamping angle			6-30873-00-0-1
	2 Countersunk screw			9-13489-12-R-8
	2 Countersunk screw			9-13489-10-R-8
1	**Bag of additional parts – 130 kg** [1]		10	K-16595-00-0-*
	for sash weight > 80 kg			
	Contents			
	1 Stay arm bearing 130 [1]			9-41710-00-0-*
	1 Stay arm bearing axle 130			9-39809-01-0-6
	1 Countersunk screw M 5 x 16			9-33841-16-R-8

[1] * = Colour: 0 = uncoated, 1 = F 1/EV 1, 6 = black (RAL 9005), 7 = white (RAL 9016), 7T = white (RAL 9010)

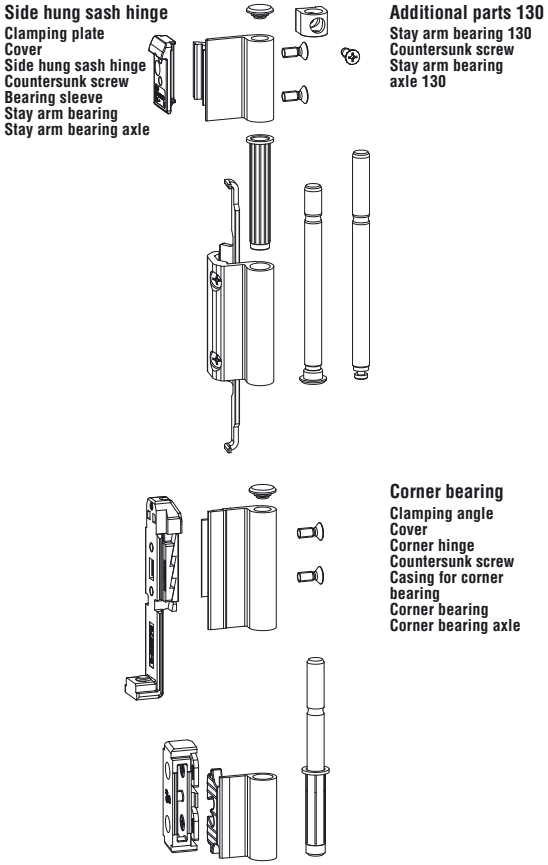

Middle hinges for side hung and inactive sashes with clampable side hung sash hinge

Fitting requirements for schemes A to I

Qty.	Description		PU	Article No.
1	**Bag of middle hinge** [1]		10	K-16897-00-0-*
	Contents			
	1 Stay arm bearing [1]			6-31591-18-0-*
	1 Stay arm bearing axle			6-30874-00-0-6
	1 Side hung sash hinge [1]			6-32249-00-0-*
	1 Clamping plate			9-42376-02-0-1
	1 Bearing sleeve			9-39805-00-0-6
	1 Cover			9-39807-00-0-6
	2 Countersunk screw			9-13489-10-R-8
1	**Bag of concealed middle hinge**			
	Frame groove	14/18	10	G-13529-00-0-1
		12/15	10	G-13528-00-0-1
		10/14	10	G-13527-00-0-1
	Contents			
	1 Rebate cam plate			G-13450-00-0-1
	1 Cam plate	14/18		G-13452-00-0-1
		12/15		G-13453-00-0-1
		10/14		G-13451-00-0-1

[1] * = Colour: 0 = uncoated, 1 = F 1/EV 1, 6 = black (RAL 9005), 7 = white (RAL 9016), 7T = white (RAL 9010)

Working drawings

Tilt-turn sash	**0-44170**
First tilt sash	**0-44529**
Side hung and inactive sashes	**0-44231**

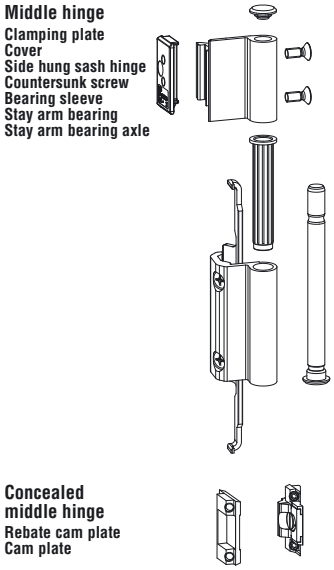

Optional part

Qty.	Description	PU	Article No.
1	**Bag of bearing sleeves/covers light grey** [1]	1	K-17803-00-0-1
	for all bags of hinge side/middle hinge JET AK 8		
	Contents		
	1 Bearing sleeve		9-39805-00-0-1
	2 Covers		9-39807-00-0-1
	1 Corner bearing sleeve		9-39831-00-0-1
	1 Safety cover		9-39806-00-0-1

[1] * = Colour: 0 = uncoated, 1 = F 1/EV 1, 6 = black (RAL 9005), 7 = white (RAL 9016), 7T = white (RAL 9010)

Side hung, inactive and tilt sash fittings

for schemes A to I

Description	PU	Article No.
Bag of axial hinge, 93 mm – 3-part [1] Frame groove 14/18 Sash weigth max. 100 kg (3 hinges) / 80 kg (2 hinges)	50	K-15887-00-0-*
Bag of axial hinge, 93 mm – 2-part [1] Frame groove 14/18 Sash weigth max. 80 kg	50	K-15820-00-0-*
Optional part **Hinge axle, eccentric** for axial hinge, 2-part – gasekt pressure adjustable	50	9-41507-00-0-8

[1] * = Colour: 0 = uncoated, 1 = F 1/EV 1, 6 = black (RAL 9005), 7 = white (RAL 9016), 7T = white (RAL 9010)

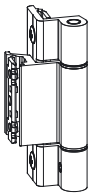

Bag of axial hinge 93 mm – 3-part K-15887-00-0-*

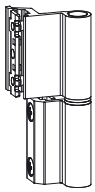

Bag of axial hinge 93 mm – 2-part K-15820-00-0-*

Hinge axle, eccentric for axial hinge, 2-part 9-41507-00-0-8

Side hung, inactive and tilt sash fittings

for schemes A to I

Description	PU	Article No.
Bag of axial hinge, 127 mm – 3-part [1] Frame groove 14/18, 12/15, 10/14 Sash weigth max. 80 kg	100	G-46731-00-0-*
Bag of axial hinge, 84 mm – 2-part [1] Frame groove 14/18, 12/15, 10/14 Sash weigth max. 80 kg	10	G-46730-00-0-*

[1] * = Colour: 0 = uncoated, 1 = F 1/EV 1, 5 = brown (RAL 8022), 6 = black (RAL 9005), 7 = white (RAL 9016), 7T = white (RAL 9010)

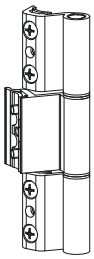

Bag of axial hinge 127 mm – 3-part G-46731-00-0-*

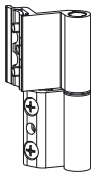

Bag of axial hinge 84 mm – 2-part G-46730-00-0-*

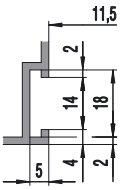

Frame groove 14/18

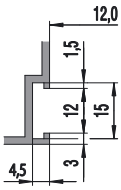

Frame groove 12/15

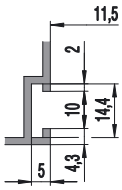

Frame groove 10/14

JET AK 8

Application	Description	PU	Article No.
Assembly of stay arm bearing 130 kg	**Tilt-turn, first tilt, side hung and tilt sash fittings**		
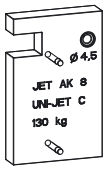	Drilling and mounting jig for stay arm bearing 130 kg 9-41710-00-0-1	1	6-31951-00-0-6
Assembly of mill-in gear	**Tilt-turn, first tilt and side hung**		
	Drilling jig for mill-in gear 6-25948, 6-25917 and lock 6-25918	1	6-26191-00-0-2
Profile processing	**Pneumatic cutter for profile processing** Operations:	1	6-31957-00-0-0
	1. Punching of handle slot and holes 2. Cutting and punching of push rod (holes Ø 6 mm) 3. Punching the aperture to insert the push rod in the profile		
	Technical Data:		
	Dimensions: approx. 326 x 302 x 220 mm Cylinder: 1750 kg, Ø 200 mm Operating pressure: 6 bar Drive: manual valve Weight: approx. 30 kg		

Projecting top hung window fittings

Application

Projecting top hung window fittings are primarily designed for use on metall windows and need to be planned for each project individually. However, they also offer special solutions for PVC, timber, or timber-aluminium composite windows.
Due to the stay arms being designed asymmetrically, the sash very early runs in final closed position so the window is shut safely and weathertight.
The system resists extremely high wind loads on high-rise building façades and provides outstanding tightness against air and water ingress.
The fittings are operated with stylish geared handles coming in various colours.

Locking mechanisms

The fittings are concealed in the rebate and operated with a single handle. All locking parts are designed for Euro groove 15/20 mm. The locking pins on carriers, locking pin elements and corner transmissions are adjustable. Additional option: use of single locking pins for push rods – not adjustable.
Corner transmissions are provided with rust-proof 4-leaf stainless steel springs.

Locking scheme:

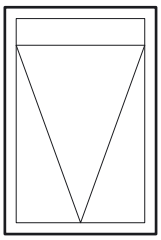

Space required for projecting top hung stay

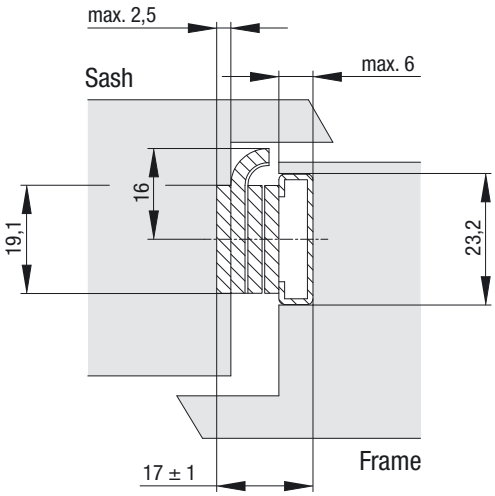

Geared handles SPACIO

The fixings of the geared aluminium handles are concealed. The rosettes are provided with a rugged detent device. Lockable and removable handles as well as handles with extended carrier fork complete the programme.

Standard colours:

uncoated	without surface coating
F 1/EV 1	silver colour
UC 5	dark bronze
black	RAL 9005
white	RAL 9016 or RAL 9010

Materials, surface sealing fer**GU**ard*silver

The fitting parts are made of high quality steel, zinc die-casting or aluminium alloys.
Depending on the material, they are protected against corrosion by surface sealing with fer**GU**ard*silver or by anodisation (aluminium parts).

Abbreviations

CB	Cylinder bore
lh	Left hand
PU	Packing unit
rh	Right hand
ST	Sash thickness
TSH	Total sash heigh
TSW	Total sash width
SW	Sash weight

Profile system manufacturers‘ information

The product guidelines of the profile manufacturers regarding construction, assembly, max. sash dimensions, max. sash weights and material qualities (e.g. longitudinal expansion) are to be observed.

Application diagram / Fitting requirements

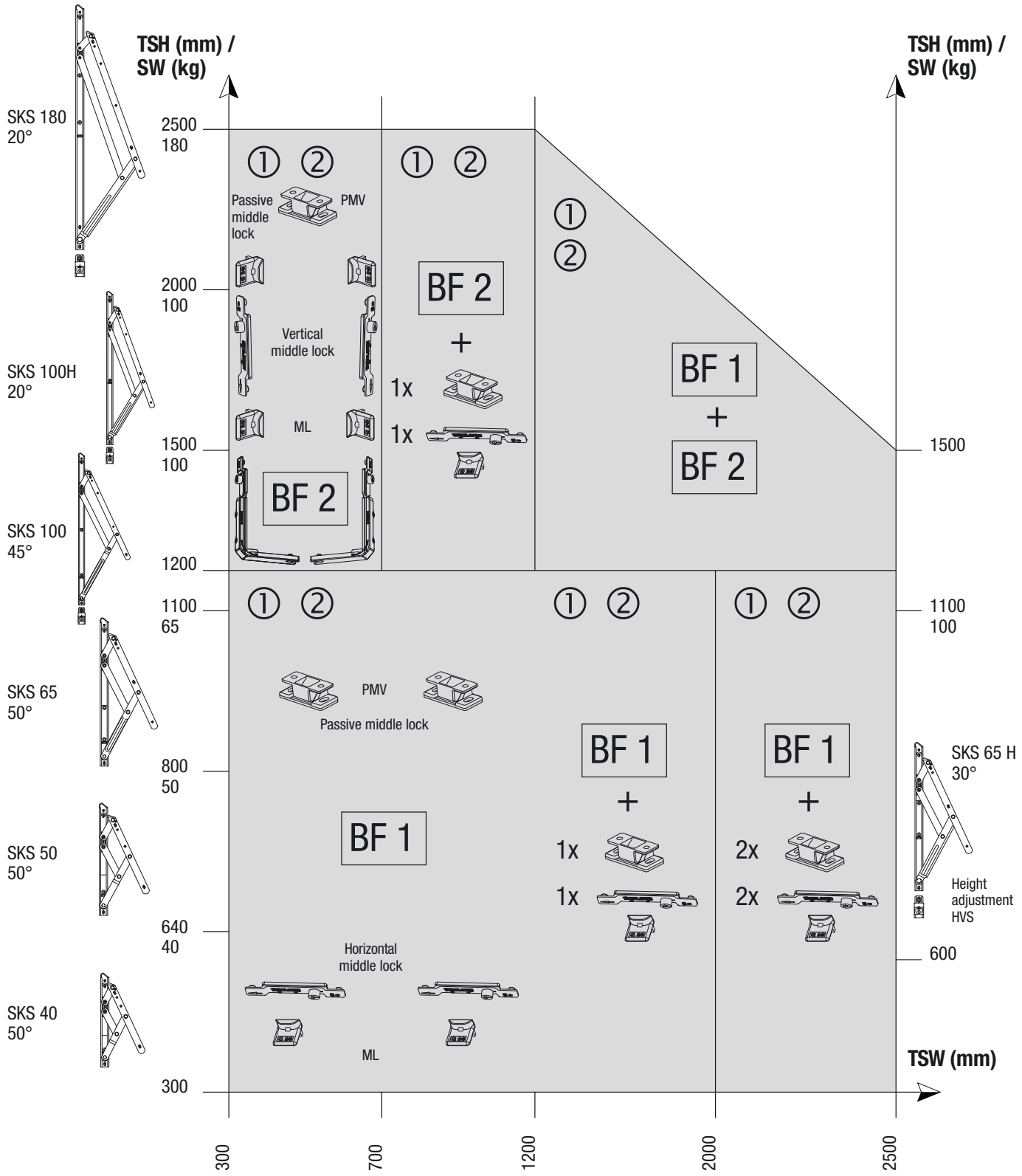

BF 1/2 = Basic fittings 1/2 ① Motor application ② Manual application

Geared handles SPACIO – single locking direction aluminium, painted – 1 carrier fork 22 mm

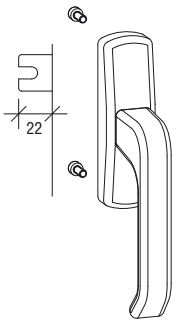

Bag of geared handle
SPACIO – not lockable
2 screws
G-46551-96-0-*

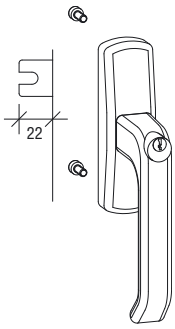

Bag of geared handle
SPACIO – lockable
2 screws, 2 keys
G-46553-96-0-*

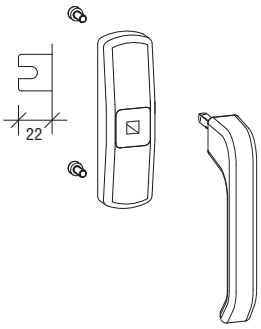

Bag of
geared rosette SPACIO
2 screws
G-46555-96-0-*

Removable handle SPACIO
G-18888-00-0-*

90° limiter
for aluminium rosettes
9-34612-00-0-6

Geared handles SPACIO – single locking direction aluminium, painted – 1 carrier fork 33 mm

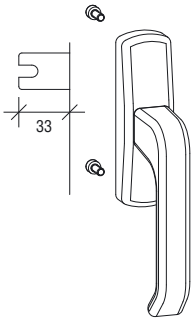

Bag of geared handle
SPACIO – not lockable
2 screws
G-46595-96-0-*

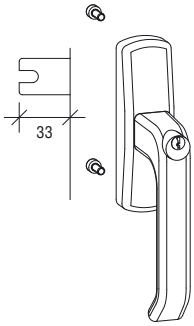

Bag of geared handle
SPACIO – lockable
2 screws, 2 keys
G-46597-96-0-*

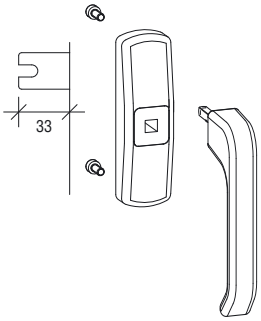

Bag of
geared rosette SPACIO
2 screws
G-46596-96-0-*

Removable handle SPACIO
G-18888-00-0-*

Projecting top hung stays and vertical adjustment

Description, illustration	Application		DIN	Article No.
Projecting top hung stay SKS 40 	Max. sash weight Min. sash height Max. sash height Opening angle	40 kg 267 mm 640 mm 50° ± 2,5°	DIN left hand DIN right hand	9-44762-00-P-8
Projecting top hung stay SKS 50 	Max. sash weight Min. sash height Max. sash height Opening angle	50 kg 640 mm 800 mm 50° ± 2,5°	DIN left hand DIN right hand	9-44763-00-P-8
Projecting top hung stay SKS 65 	Max. sash weight Min. sash height Max. sash height Opening angle	65 kg 800 mm 1100 mm 50° ± 2,5°	DIN left hand DIN right hand	9-44764-00-P-8
Projecting top hung stay SKS 65 H 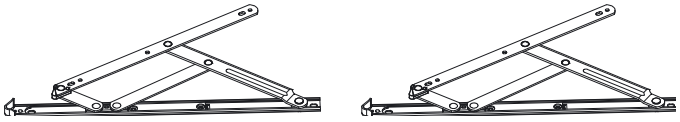	Max. sash weight Min. sash height Max. sash height Opening angle Vertical adjustment	65 kg 600 mm 1100 mm 30° ± 2,5° ± 2 mm	DIN left hand DIN right hand	9-44765-00-P-8
Projecting top hung stay SKS 100 	Max. sash weight Min. sash height Max. sash height Opening angle Vertical adjustment	100 kg 1100 mm 1500 mm 45° ± 2,5° ± 2 mm	DIN left hand DIN right hand	9-44766-00-P-8
Projecting top hung stay SKS 100H 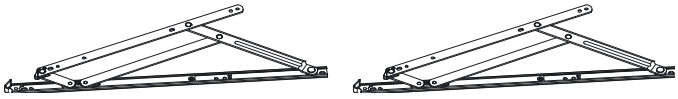	Max. sash weight Min. sash height Max. sash height Opening angle Vertical adjustment	100 kg 1500 mm 2000 mm 20° ± 2,5° ± 2 mm	DIN left hand DIN right hand	9-44767-00-P-8
Projecting top hung stay SKS 180 	Max. sash weight Min. sash height Max. sash height Opening angle Vertical adjustment	180 kg 2000 mm 2500 mm 20° ± 2,5° ± 2 mm	DIN left hand DIN right hand	9-44768-00-P-8
Vertical adjusting device HVS [1] 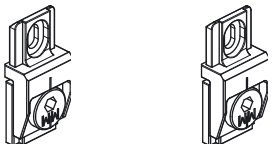	Vertical adjustment	± 2 mm		9-44769-00-0-1

[1] required for sash weights > 65 kg

Locking elements, opening restrictor, geared handle and gear

Description, application	Consisting of:	Illustration.	Article No.
Horizontal lock (bottom) Min. sash width 600 mm Max. sash width 1500 mm Max. sash height 1500 mm	2 x locking plate (frame)	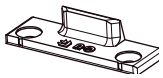	6-40229-00-0
	2 x locking pin element	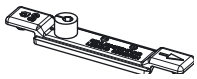	6-24539-08-0
Passive middle lock PMV (top)		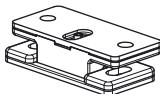	9-44770-00-0-0
Opening restrictor size 2 lockable Length c-rail 200 mm Length scissors arm 152,4 mm	2 pieces per window	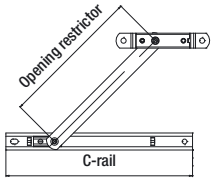	6-C8628-06-0-8
Opening restrictor size 3 lockable Length c-rail 200 mm Length scissors arm 203,2 mm	2 pieces per window	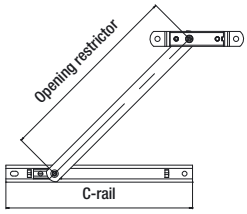	6-C8628-08-0-8
Key		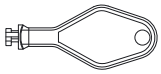	9-C8628-00-0-0
Vertical lock	2 x locking plate (frame)	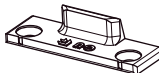	6-40229-00-0
	2 x locking pin element	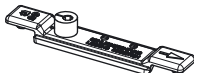	6-24539-08-0
	2 x corner transmission	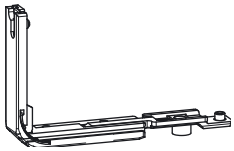	6-24529-08-0
Geared handle SPACIO		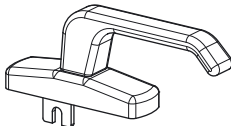	G-46551-00-0-1
Gear for concealed mounting Stroke: 25,5 mm		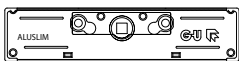	G-19270-01-0-1

Parallel offset window fittings

Application

Projecting top hung window fittings are primarily designed for use on metall windows and need to be planned for each project individually. However, they also offer special solutions for PVC, timber, or timber-aluminium composite windows.
The fittings are operated with stylish geared handles coming in various colours.

Locking mechanisms

The fittings are concealed in the rebate and operated with a single handle. All locking parts are designed for Euro groove 15/20 mm. The locking pins on carriers, locking pin elements and corner transmissions are adjustable. Additional option: use of single locking pins for push rods – not adjustable.
Corner transmissions are provided with rust-proof 4-leaf stainless steel springs.

Locking scheme:

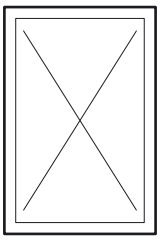

Space required for parallel offset window fittings

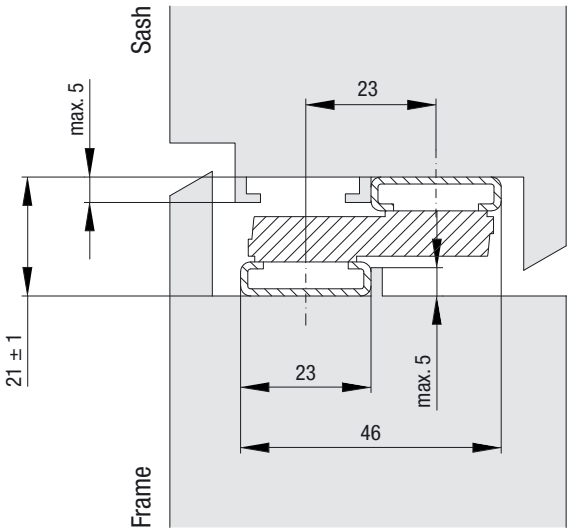

Geared handles SPACIO

The fixings of the geared aluminium handles are concealed. The rosettes are provided with a rugged detent device. Lockable and removable handles as well as handles with extended carrier fork complete the programme.

Standard colours:

uncoated	without surface coating
F 1/EV 1	silver colour
UC 5	dark bronze
black	RAL 9005
white	RAL 9016 or RAL 9010

Materials, surface sealing fer**GU**ard*silver

The fitting parts are made of high quality steel, zinc die-casting or aluminium alloys.
Depending on the material, they are protected against corrosion by surface sealing with fer**GU**ard*silver or by anodisation (aluminium parts).

Abbreviations

CB	Cylinder bore
lh	Left hand
PU	Packing unit
rh	Right hand
ST	Sash thickness
TSH	Total sash height
TSW	Total sash width
SW	Sash weight

Profile system manufacturers‘ information

The product guidelines of the profile manufacturers regarding construction, assembly, max. sash dimensions, max. sash weights and material qualities (e.g. longitudinal expansion) are to be observed.

Application diagram / Fitting requirements

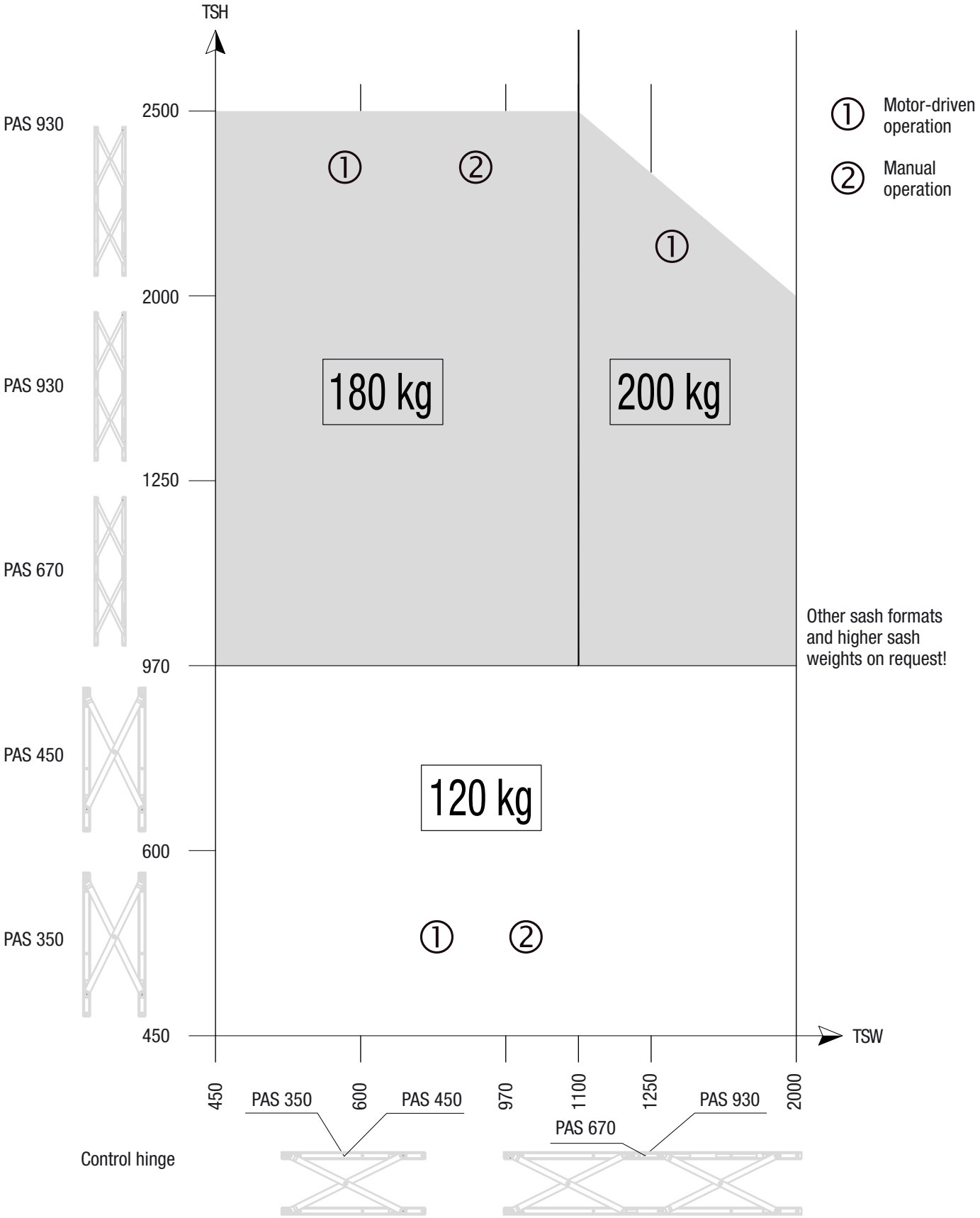

Geared handles SPACIO – single locking direction aluminium, painted – 1 carrier fork 22 mm

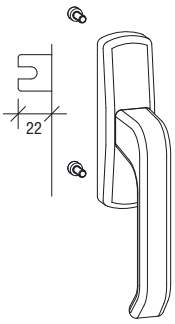

Bag of geared handle
SPACIO – not lockable
2 screws
G-46551-96-0-*

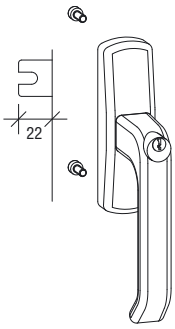

Bag of geared handle
SPACIO – lockable
2 screws, 2 keys
G-46553-96-0-*

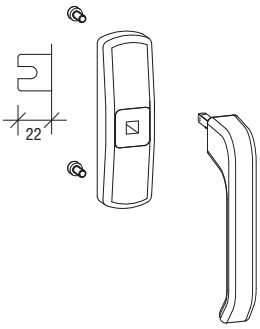

Bag of
geared rosette SPACIO
2 screws
G-46555-96-0-*

Removable handle SPACIO
G-18888-00-0-*

90° limiter
for aluminium rosettes
9-34612-00-0-6

Geared handles SPACIO – single locking direction aluminium, painted – 1 carrier fork 33 mm

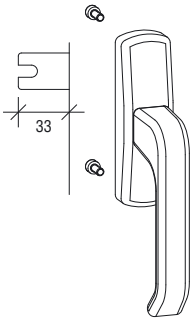

Bag of geared handle
SPACIO – not lockable
2 screws
G-46595-96-0-*

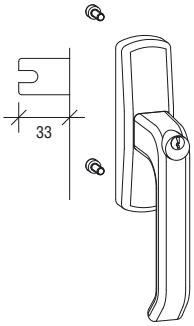

Bag of geared handle
SPACIO – lockable
2 screws, 2 keys
G-46597-96-0-*

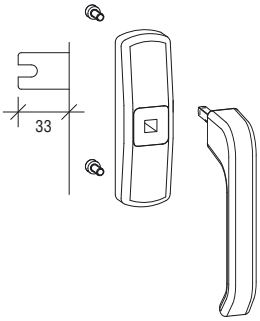

Bag of
geared rosette SPACIO
2 screws
G-46596-96-0-*

Removable handle SPACIO
G-18888-00-0-*

Parallel offset stays

Description, illustration	Application		DIN	Article No.
Parallel offset stay PAS 350 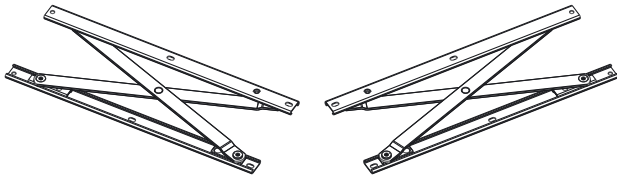	Max. sash weight Min. sash height Max. sash height Opening width man. Opening width mot.	100 kg 380 mm 500 mm 150 mm 180 mm	DIN left hand DIN right hand	6-34810-00-9-8
Parallel offset stay PAS 450 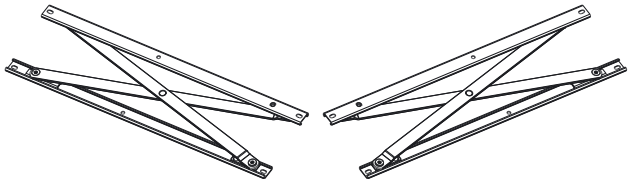	Max. sash weight Min. sash height Max. sash height Opening width man. Opening width mot.	100 kg 480 mm 720 mm 180 mm 250 mm	DIN left hand DIN right hand	6-34811-00-9-8
Parallel offset stay PAS 670 	Max. sash weight Min. sash height Max. sash height Opening width man. Opening width mot.	200 kg 700 mm 1100 mm 150 mm 180 mm	DIN left hand DIN right hand	6-34812-00-9-8
Parallel offset stay PAS 930 	Max. sash weight Min. sash height Max. sash height Opening width man. Opening width mot.	200 kg 960 mm 2000 mm 180 mm 250 mm	DIN left hand DIN right hand	6-34813-00-9-8
Parallel offset stay PAS 1135 to use gear G-19270-01-0-1 for concealed mounting 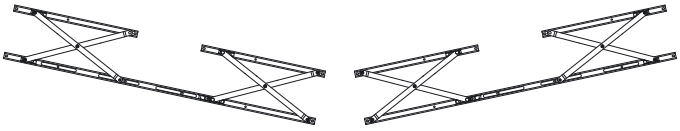	Max. sash weight Min. sash height Max. sash height Opening width man. Opening width mot.	200 kg 1400 mm 2100 mm 150 mm 250 mm	DIN left hand DIN right hand	6-35142-00-9-8

Tilt-turn, first tilt, side hung and tilt sash fittings for aluminium windows and patio doors

Application

Range of applications for tilt-turn and side hung fittings UNI-JET:
- single-sash windows and doors
- double-sash windows and doors without mullion
- single-sash doors, lockable
- double-sash doors, lockable, without mullion

Locking mechanisms with automatic locking pins

UNI-JET locking mechanisms are concealed in the rebate and provide for one handle operation. All locking parts are designed for the standard hardware groove of 16,3 mm width and 2,5 mm depth.

Automatic locking pins of steel
The automatic steel locking pins of gear parts, stay arms, middle locks and corner transmissions are adjustable with Torx and supported with springs compensating for the rebate clearance; the spring travel is 1,2 mm.

Clip connections and couplings
Gears and middle locks as well as stay arm connecting plates and middle locks are clipped together. Push rods are connected via rack coupling toothed on both sides. All locking parts which can be shortened are fixed with the mechanism in turn position (= mounting position); corner transmissions and middle locks are provided with rust-proof 4-leaf stainless steel springs.

UNI-JET tilt-turn stay arms with integrated slit ventilation
As a standard or with optional slit ventilation springs, tilt-turn stay arms allow for additional ventilation positions – more comfort with multi-stage ventilation. The stay arms are provided with an anti-bang safeguard.

The standard locking mechanism UNI-JET: Basic security
As a standard, UNI-JET locking mechanisms come in security class "basic security". For all opening methods, a steel mushroom pin locking plate "Se" is provided at the horizontal bottom towards the gear side. As a result, the protection against lifting attempts is improved in this crucial area.

Burglary-resistant locking mechanisms "Ahs Standard to RAL RG 607/13"
Corner transmissions with 2 automatic locking pins and hinge side middle locks with 1 automatic locking pin near the stay arm bearing fulfill the requirements of "Anti-lift security (Ahs) Standard to RAL RG 607/13". In the corner area of window and door sashes, zinc mushroom pin locking plates are used.

Burglary-resistant locking mechanisms "Ahs Extra to RAL RG 607/13"
Corner transmissions with 2 automatic locking pins and hinge side middle locks with 1 automatic locking pin near the stay arm bearing fulfill the requirements of "Anti-lift security (Ahs) Extra to RAL RG 607/13". In the corner area of window and door sashes, Se mushroom pin locking plates of stainless steel are used as a standard.

Burglary-resistant locking mechanisms "WK 2 to ENV 1627"
Burglary-resistant locking mechanisms „WK 2“ fulfill the requirements to ENV 1627, provided mushroom pin locking plates Se of stainless steel are used on all locking points.

Anti-lift security fittings AhS RAL-RG 607/13

UNI-JET anti-lift fittings to RAL-RG 607/13 are marked "AhS" in the catalogue.

Burglary-resistant windows ENV 1627 – 1630, April 99

UNI-JET tilt-turn and side hung fittings suitable for the installation on burglary-resistant windows to ENV 1627 – resistance classes WK 2 – are marked in the catalogue "Security fittings to ENV 1627 – WK 2".
The ENV 1627 – 1630 test evaluates the burglary-resistant effect of the complete window unit.

Maximum sash dimensions

Fixed gear position

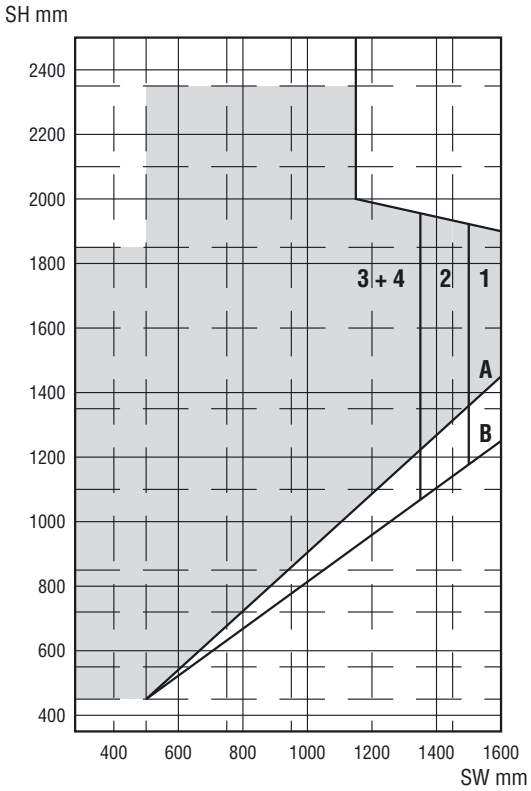

1 = maximum sash width for stress group 1, DIN EN 12207
2 = maximum sash width for stress group 2, DIN EN 12207
3 + 4 = maximum sash width for stress group 3 + 4, DIN EN 12207

Variable gear position

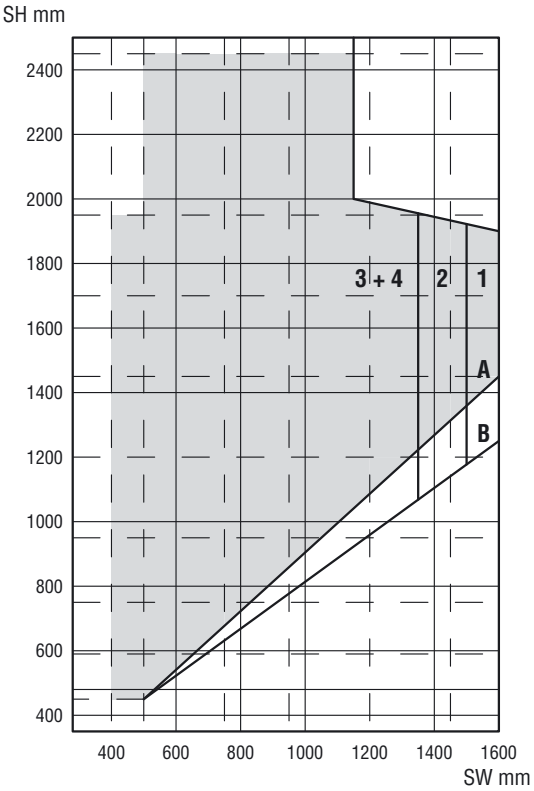

A = Use according to destination
B = Side hung position only for occasional cleaning purposes
(see DIN EN 12207, table NA.1)
The broken lines represent the grid spacings of the fittings.

Tilt-turn, first tilt, side hung and tilt sash fittings for aluminum windows and patio doors

Locking mechanism "Basic security"

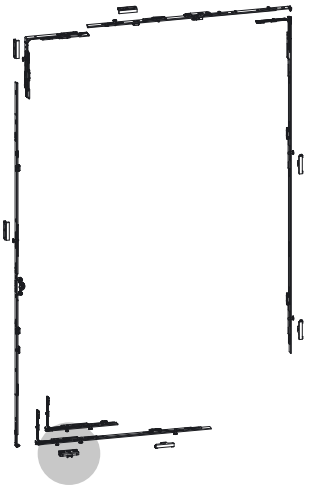

Equipment "Basic security"

1 Steel mushroom pin locking plate Se for
– tilt function
– standard security for locking mechanisms UNI-JET

– all other locking pins with standard locking plates made of zinc


Standard locking plate made of zinc


Mushroom pin locking plate Se made of steel

Locking mechanism "Ahs Standard" and "Ahs Extra" according to RAL RG 607/13

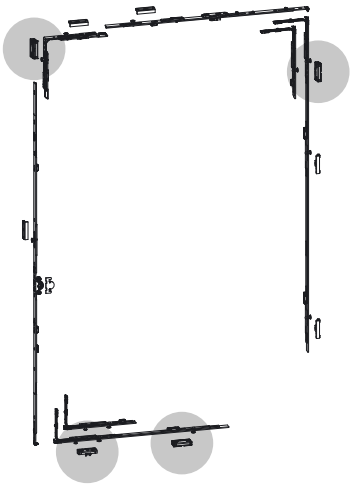

Equipment "Ahs Standard"

1 Steel mushroom pin locking plate Se for
– tilt function

3 Mushroom pin locking plates Ahs made of zinc for
– security "Ahs-Standard" according to RAL RG 607/13

– all other locking pins with standard locking plates made of zinc


Standard locking plate made of zinc


Mushroom pin locking plate Ahs made of zinc


Mushroom pin locking plate Se made of steel

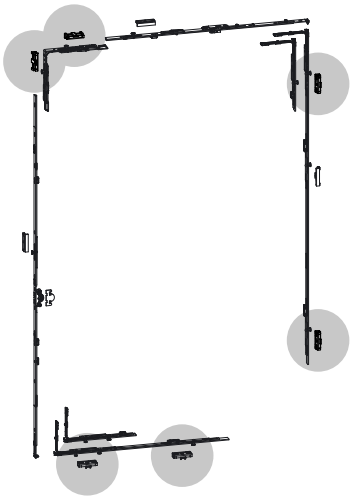

Equipment "Ahs Extra"

6 Steel mushroom pin locking plates Se for
– tilt function
– security "Ahs-Extra" according to RAL RG 607/13

– all other locking pins with standard locking plates made of zinc


Standard locking plate made of zinc


Mushroom pin locking plate Se made of steel

Locking mechanism "WK 2" according to ENV 1627

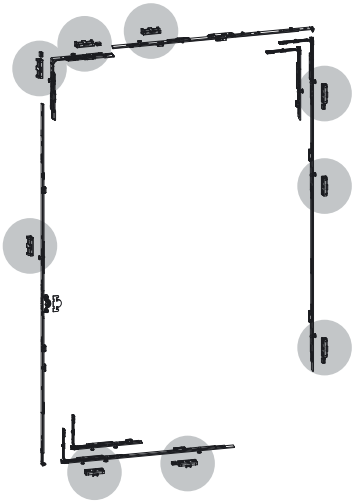

Equipment WK 2 for single and double sash windows

Steel mushroom pin locking plates Se for
– tilt function
– security "WK 2" according to ENV 1627

– all locking pins with mushroom pin locking plates Se made of steel


Mushroom pin locking plate Se made of steel

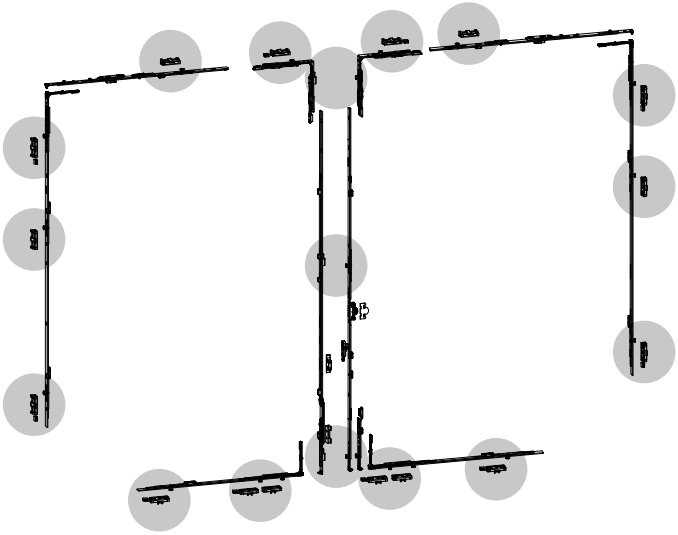

Tilt-turn, first tilt, side hung and tilt sash fittings for aluminium windows and patio doors

Hinge side hardware

Tilt-turn, first tilt and side hung fittings UNI-JET C
Clampable fittings for windows and patio doors with 12 mm rebate clearance, 16 mm fitting groove on the sash and 14/18, 12/15 or 10/14 groove on the frame.
Corner bearing, stay arm hinge and side hung sash hinge are designed for groove position 9 and 13 mm and for sash overlap 18 and 20 mm. Max. sash weight 80 kg. Vertical adjustment on the corner bearing + 2,5 to - 1,5 mm, horizontal adjustment ± 1 mm. Stay arm adjustable ± 3 mm, gasket pressure adjustable ± 1 mm.

Tilt-turn, first tilt and side hung fittings UNI-JET C-130
Clampable fittings for windows and patio doors with 12 mm rebate clearance, 16 mm fitting groove on the sash and 14/18, 12/15 or 10/14 groove on the frame.
Corner bearing, stay arm hinge and side hung sash hinge are designed for groove position 9 and 13 mm and for sash overlap 18 and 20 mm. With bag of additional parts for sash weights up to 130 kg. Vertical adjustment on the corner bearing + 2,5 to - 1,5 mm, horizontal adjustment ± 1 mm. Stay arm adjustable ± 3 mm, gasket pressure adjustable ± 1 mm.

Tilt-turn and side hung fittings UNI-JET D
Rebate hinge fittings with drill-in hinge or rebate corner hinge and rebate double stay for windows and patio doors with 12 mm rebate clearance up to 100 kg sash weight.
Rebate corner hinge, side hung sash hinge and middle hinge as well as double stay for 9 and 13 mm grooves – 18, 20 and 22 mm sash overlap. Corner bearing 3-way adjustable, symmetric drill pattern for stay arm bearings and corner bearing.

Locking plates and packings

Frame profile specific locking plates and packings according to table (see at the end of this catalogue chapter).

Drilling jigs, assembly tools

Drilling jigs and other tools for hardware assembly are to be found at the end of this catalogue chapter and also in the respective working drawings.

Turn handles DIRIGENT [1]

The handles are made of aluminium with concealed fixings. The rosettes are provided with a rugged detent device and fixed cams. Lockable handles complete the programme.

Standard colours:

F 1/EV 1	silver colour
F 2/EV 2	new silver colour
F 3	gold colour
F 4	light brown
dark brown	dark brown (RAL 8022)
black	black (RAL 9005)
white	white (RAL 9016 or RAL 9010)

[1] More turn handles see part 3 of the present order catalogue.

Materials, surface sealing fer**GU**ard*silver

The fitting parts are made of high quality steel, zinc die-casting or aluminium alloys.
Depending on the material, they are protected against corrosion by surface sealing with fer**GU**ard*silver or by anodisation (aluminium parts).

Standard surface sealing of tilt-turn fittings: fer**GU**ard*silver

All locking parts of tilt-turn fittings come with the surface sealing fer**GU**ard*silver.

Abbreviations

CB	Cylinder bore
FT	First tilt fittings
G	Fixed gear position
GV	Variable gear position
IS	Inactive sash fittings
lh	Left hand
ML	Middle lock
PU	Packing unit
rh	Right hand
Se	Security fittings
SH	Side hung fittings
ST	Sash thickness
SRH	Sash rebate height
SRW	Sash rebate width
T	Tilt sash
TT	Tilt-turn window or door

Profile system manufacturers' information

It is important to observe the product information issued by the profile system manufacturers, especially information concerning construction and fabrication, maximum sash dimensions and weights and material features such as linear expansion of profiles.

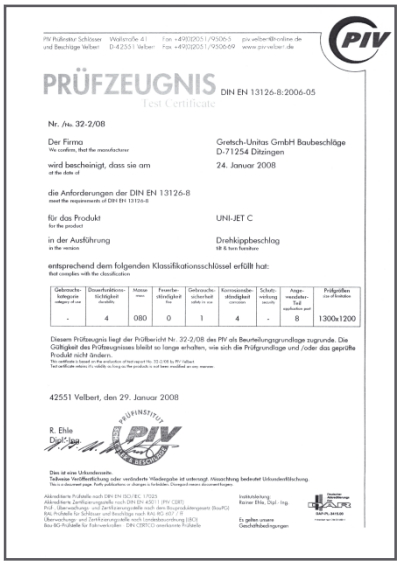

PIV Prüfinstitut Schlösser und Beschläge Velbert | Wallstraße 41 | D-42551 Velbert | Fon +49(0)2051/93006-5 | Fax +49(0)2051/93006-69 | piv-velbert@online.de | www.piv-velbert.de

PRÜFZEUGNIS DIN EN 13126-8:2006-05
Test Certificate

Nr. /No. 32-2/08

Der Firma / We confirm, that the manufacturer: Gretsch-Unitas GmbH Baubeschläge, D-71254 Ditzingen

wird bescheinigt, dass sie am / at the date of: 24. Januar 2008

die Anforderungen der DIN EN 13126-8 / meet the requirements of DIN EN 13126-8

für das Produkt / for the product: UNI-JET C

in der Ausführung / in the version: Drehkippbeschlag / tilt & turn furniture

entsprechend dem folgenden Klassifikationsschlüssel erfüllt hat: / that complies with the classification

Gebrauchskategorie / category of use	Dauerfunktionsfähigkeit / durability	Masse / mass	Feuerbeständigkeit / fire	Gebrauchssicherheit / safety in use	Korrosionsbeständigkeit / corrosion	Schutzwirkung / security	Angewendeter Teil / application part	Prüfgrößen / size of furniture
-	4	080	0	1	4	-	8	1300x1200

Diesem Prüfzeugnis liegt der Prüfbericht Nr. 32-2/08 des PIV als Beurteilungsgrundlage zugrunde. Die Gültigkeit des Prüfzeugnisses bleibt so lange erhalten, wie sich die Prüfgrundlage und /oder das geprüfte Produkt nicht ändern.
This certificate is based on the evaluation of test report No. 32-2/08 by PIV Velbert. Test certificate retains its validity as long as the products is not been modified in any manner.

42551 Velbert, den 29. Januar 2008

R. Ehle
Dipl.-Ing.

PRÜFINSTITUT PIV

Dies ist eine Urkundenkopie.
Teilweise Veröffentlichung oder verkürzte Wiedergabe ist untersagt. Missachtung bedeutet Urkundenfälschung.
This is a document copy. Partly publication or changes is forbidden. Disregard means document forgery.

Akkreditierte Prüfstelle nach DIN EN ISO/IEC 17025
Prüf-, Überwachungs- und Zertifizierungsstelle nach DIN EN 45011 (PIV CERT)
Prüf-, Überwachungs- und Zertifizierungsstelle nach dem Bauproduktengesetz (BauPG)
RAL Prüfstelle für Schlösser und Beschläge nach RAL-RG 607 / 8
Überwachungs- und Zertifizierungsstelle nach Landesbauordnung (BO)
Bau BG-Prüfstelle für Fahrtreppenschlösser - DIN CERTCO anerkannte Prüfstelle

Institutsleitung
Rainer Ehle, Dipl.-Ing.

Es gelten unsere Geschäftsbedingungen

Test certificate UNI-JET C

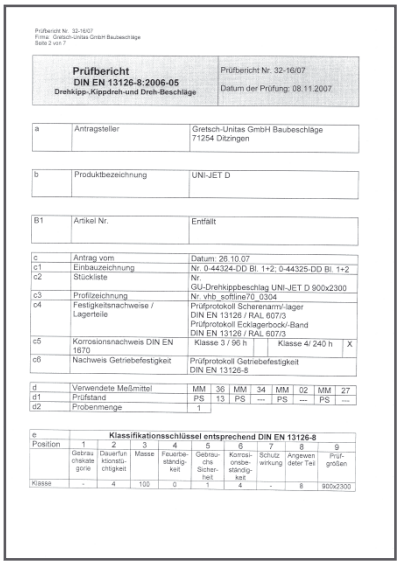

Prüfbericht Nr. 32-16/07
Firma: Gretsch-Unitas GmbH Baubeschläge
Seite 3 von 7

Prüfbericht
DIN EN 13126-8:2006-05
Drehkipp-,Kippdreh-und Dreh-Beschläge

Prüfbericht Nr. 32-16/07
Datum der Prüfung: 08.11.2007

a	Antragsteller	Gretsch-Unitas GmbH Baubeschläge 71254 Ditzingen
b	Produktbezeichnung	UNI-JET D
B1	Artikel Nr.	Entfällt
c	Antrag vom	Datum: 28.10.07
c1	Einbauzeichnung	Nr. 0-44324-DD Bl. 1+2; 0-44325-DD Bl. 1+2
c2	Stückliste	Nr. GU-Drehkippbeschlag UNI-JET D 900x2300
c3	Profilzeichnung	Nr. vhb_soffine70_0304
c4	Festigkeitsnachweise / Lagerteile	Prüfprotokoll Scherenarm/-lager DIN EN 13126 / RAL 607/3; Prüfprotokoll Ecklagerbock/-Band DIN EN 13126 / RAL 607/3
c5	Korrosionsnachweis DIN EN 1670	Klasse 3 / 96 h; Klasse 4/ 240 h: X
c6	Nachweis Getriebefestigkeit	Prüfprotokoll Getriebefestigkeit DIN EN 13126-8

d	Verwendete Meßmittel	MM	36	MM	34	MM	02	MM	27
d1	Prüfstand	PS	13	PS	---	PS	---	PS	---
d2	Probenmenge	1							

e — **Klassifikationsschlüssel entsprechend DIN EN 13126-8**

Position	1	2	3	4	5	6	7	8	9
	Gebrauchskategorie	Dauerfunktionstüchtigkeit	Masse	Feuerfestbeständigkeit	Gebrauchssicherheit	Korrosionsbeständigkeit	Schutzwirkung	Angewendeter Teil	Prüfgrößen
Klasse	-	4	100	0	1	4	-	8	900x2300

Test certificate UNI-JET D

Tilt-turn, first tilt, side hung and tilt sash fittings for aluminium windows and patio doors

Application of locking mechanisms

Locking mechanisms for schemes A to E

Resistance class/ Opening method	No. of sashes	Gear Backset 15 mm, Gear position	Gear lockable backset mm	Sash rebate width SRW mm	Sash rebate height SRH mm	Standard working drawing
"Basic security"						
Tilt-turn sash	1	fixed	25 up to 50	280-1600	350-2350	0-44324
Tilt-turn sash	2	fixed	25 up to 50	401-1600	451-2350	0-44324
Side hung sash	1	fixed	25 up to 50	280-1600	451-2350	0-44324
Side hung sash	2	fixed	25 up to 50	280-1600	451-2350	0-44324
Inactive sash	2	fixed		280-1600	470-2350	0-44348
"Ahs Standard RAL RG 607/13"						
Tilt-turn sash	1	fixed	25 up to 50	401-1600	451-2350	0-44324
Tilt-turn sash	2	fixed	25 up to 50	401-1600	451-2350	0-44324
Side hung sash	1	fixed	25 up to 50	401-1600	451-2350	0-44324
Side hung sash	2	fixed	25 up to 50	401-1600	451-2350	0-44324
Inactive sash	2	fixed		401-1600	470-2350	0-44348
"Ahs Extra RAL RG 607/13"						
Tilt-turn sash	1	fixed	25 up to 50	401-1600	451-2350	0-44324
Tilt-turn sash	2	fixed	25 up to 50	401-1600	451-2350	0-44324
Side hung sash	1	fixed	25 up to 50	401-1600	451-2350	0-44324
Side hung sash	2	fixed	25 up to 50	401-1600	451-2350	0-44324
Inactive sash	2	fixed		401-1600	470-2350	0-44348
"WK 2 to ENV 1627"						
Tilt-turn sash	1	fixed	25 up to 50	401-1600	451-2350	0-44324
Tilt-turn sash	2	fixed	25 up to 50	401-1600	451-2350	0-44324
Side hung sash	1	fixed	25 up to 50	401-1600	451-2350	0-44324
Side hung sash	2	fixed	25 up to 50	401-1600	451-2350	0-44324
Inactive sash	2	fixed		401-1600	470-2350	0-44348
"Basic security"						
Tilt-turn sash	1	variable	25 up to 50	401-1600	480-2450	0-44324
Tilt-turn sash	2	variable	25 up to 50	401-1600	480-2450	0-44324
Side hung sash	1	variable	25 up to 50	280-1600	480-2450	0-44324
Side hung sash	2	variable	25 up to 50	280-1600	480-2450	0-44324
Inactive sash	2	variable		280-1600	741-2450	0-44348
"Ahs Standard RAL RG 607/13"						
Tilt-turn sash	1	variable	25 up to 50	401-1600	480-2450	0-44324
Tilt-turn sash	2	variable	25 up to 50	401-1600	480-2450	0-44324
Side hung sash	1	variable	25 up to 50	401-1600	480-2450	0-44324
Side hung sash	2	variable	25 up to 50	401-1600	480-2450	0-44324
Inactive sash	2	variable		401-1600	741-2450	0-44348
"Ahs Extra RAL RG 607/13"						
Tilt-turn sash	1	variable	25 up to 50	401-1600	480-2450	0-44324
Tilt-turn sash	2	variable	25 up to 50	401-1600	480-2450	0-44324
Side hung sash	1	variable	25 up to 50	401-1600	480-2450	0-44324
Side hung sash	2	variable	25 up to 50	401-1600	480-2450	0-44324
Inactive sash	2	variable		401-1600	741-2450	0-44348
"WK 2 to ENV 1627"						
Tilt-turn sash	1	variable	25 up to 50	401-1600	480-2450	0-44324
Tilt-turn sash	2	variable	25 up to 50	401-1600	480-2450	0-44324
Side hung sash	1	variable	25 up to 50	401-1600	480-2450	0-44324
Side hung sash	2	variable	25 up to 50	401-1600	480-2450	0-44324
Inactive sash	2	variable		401-1600	741-2450	0-44348
"Basic security"						
Tilt sash gears	1	variable		591-1950	-1600	0-44396

Tilt-turn, first tilt, side hung and tilt sash fittings for aluminium windows and patio doors

Application of hinge side hardware

Hinge side hardware types

Hinge side/ Opening method	Opening method	Rebate clearance mm	Sash weight max. kg	Space required on hinge side mm	Standard drawing	
UNI-JET C						
Tilt-turn sash	TT	12	80	17	0-44708	
First tilt sash	FT	12	80	17	0-44708	
Side hung sash	SH	12	80	17	0-44708	
Inactive sash	IS	12	80	17	0-44708	
Tilt sash	T	12	80	17		
UNI-JET C-130						
Tilt-turn sash	TT	12	130	17	0-44708	
First tilt sash	FT	12	130	17	0-44708	
Side hung sash	SH	12	130	17	0-44708	
Inactive sash	IS	12	130	17	0-44708	
UNI-JET D						
Tilt-turn sash	TT	12	100	20	0-44325	
Side hung sash	SH	12	100	20	0-44325	
Inactive sash	IS	12	100	20	0-44325	
Tilt sash	T	12	100	20		

Profile systems with 16 mm fitting groove

Profile manufacturer	Profile system	Sash overlap mm	Groove position mm	Fitting groove [1] undercut/plane	Frame groove	Frame groove Dim. A	Dim. B
Alco	Alousystem 550	20,0	13,0	U	14/18	1,5	4,0
Almaco		18,0	9,0	U	14/18		
Alumil	M 11000	18,0	9,0	U	14/18	1,5	3,5
	M 11500	18,0	9,0	U	14/18	1,5	3,5
	M 20000	18,0	9,0	U	14/18	1,5	3,5
Aluminco		20,0	9,0	U	14/18	1,5	3,5
Domal	Bright PA70S	18,0	9,0	U	14/18	1,5	3,5
Elvial	4300	18,0	9,0	U	14/18	1,5	4,0
	4600	18,0	9,0	U	14/18	1,5	4,0
	5400	18,0	9,0	U	14/18	1,5	4,0
	5600	18,0	9,0	U	14/18	1,5	4,0
	5700	18,0	9,0	U	14/18	1,5	4,0
Europa	5000	18,0	9,0	U	14/18	1,5	3,5
Etem	E40	20,0	9,0	U	14/18	2,0	4,0
Exalco	Albio 109C	18,0	9,0	U	14/18	1,3	3,9
Heroal	065 / 065i / 065f	18,0	9,0	U	10/14	2,0	4,3
	090 / 090S	18,0	9,0	U	10/14	2,0	4,3
	110 ES	18,0	9,0	U	10/14	2,0	4,3
Kawneer	Kalory	20,0	9,0	U	10/14		4,0
Nordall	78TTF	18,0	9,0	U	14/18	1,5	3,5
Ponzio	Windstop 55TT	18,0	9,0	U	14/18	2,0	4,0
TS-Aluminium	65	18,0	9,0	P	14/18	2,0	4,0

[1] U = undercut, P = plane

Tilt-turn, first tilt, side hung and tilt sash fittings for aluminium windows and patio doors

Tilt-turn windows and patio doors

Fitting arrangements and sash sizes for schemes A to E

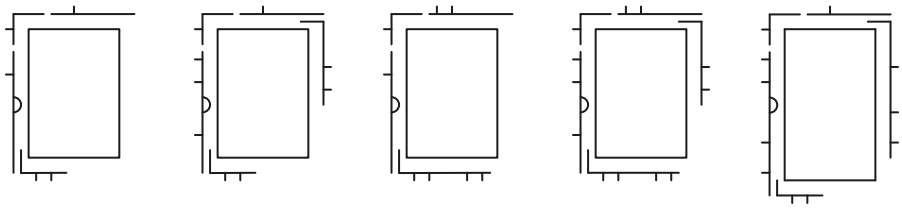

Fixed gear position, scheme	A	B	C	D	E
SRW (Sash rebate width, mm)	280-1450	280-1450	751-1600	751-1600	501-1200
SRH (Sash rebate height, mm)	350-1100	721-1850	350-1100	721-1850	1851-2350
Variable gear position, scheme	A	B	C	D	E
SRW (Sash rebate width, mm)	401-1450	401-1450	751-1600	751-1600	501-1200
SRH (Sash rebate height, mm)	480-1200	951-1950	480-1200	951-1950	1951-2450

Side hung windows and patio doors

Fitting arrangements and sash sizes for schemes A to E

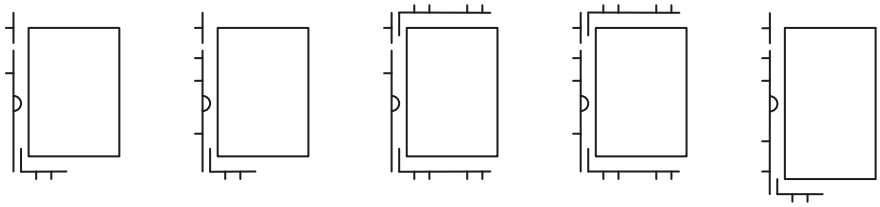

Fixed gear position, scheme	A	B	C	D	E
SRW (Sash rebate width, mm)	280- 750	280- 750	751-1600	751-1600	501-1200
SRH (Sash rebate height, mm)	451-1100	721-1850	451-1100	721-1850	1851-2350
Variable gear position, scheme	A	B	C	D	E
SRW (Sash rebate width, mm)	280- 750	280- 750	751-1600	751-1600	501-1200
SRH (Sash rebate height, mm)	480-1200	951-1950	480-1200	951-1950	1951-2450

Assembly dimensions – frame and sash profile

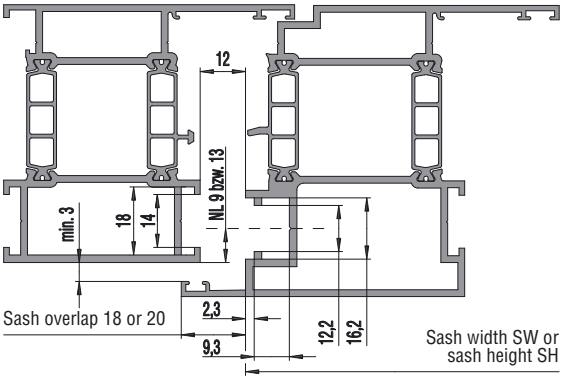

Frame and sash profile
Sash with undercut fitting groove 16 mm – groove position 9 or 13 mm
Frame groove 14/18

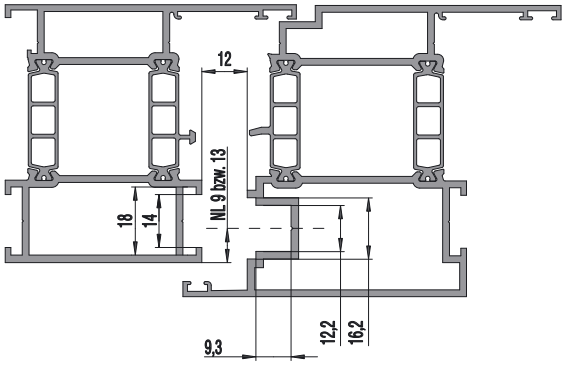

Frame and sash profile
Sash with plane fitting groove 16 mm – groove position 9 or 13 mm
Frame groove 14/18

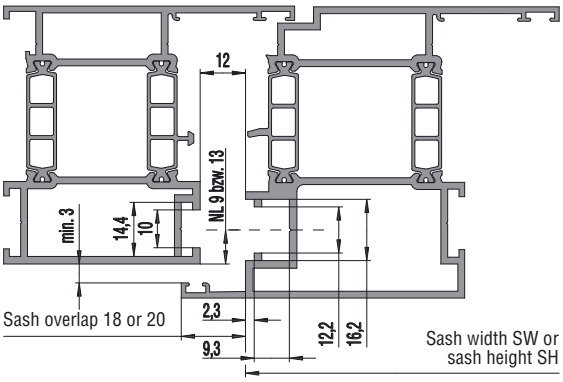

Frame and sash profile
Sashes with undercut fitting groove 16 mm – groove position 9 or 13 mm
Frame groove 10/14

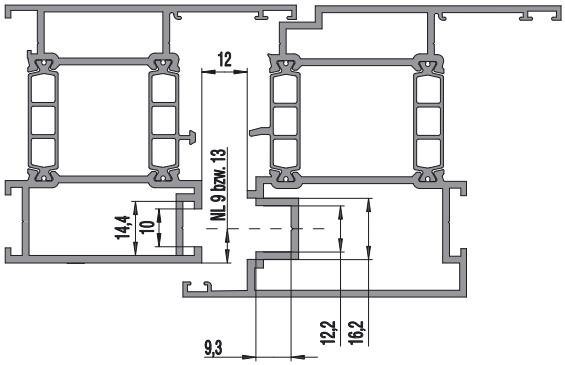

Frame and sash profile
Sashes with plane fitting groove 16 mm – groove position 9 or 13 mm
Frame groove 10/14

Drilling and milling dimensions

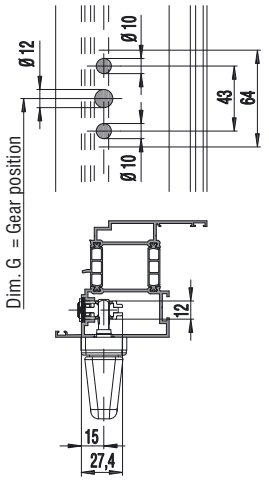

Dimensions for handles
Drilling jig 6-22459-00-0-0
Stop 9-27406-00-0-1

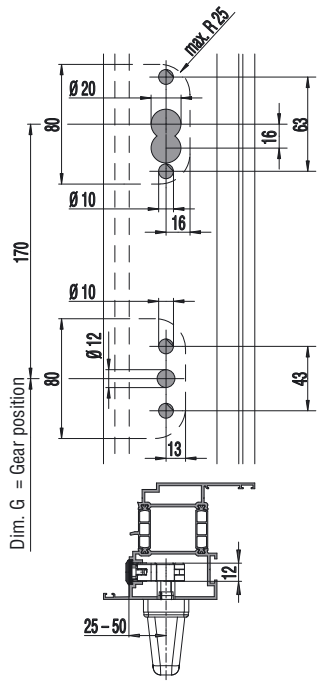

Dimensions for gears AP 25 up to AP 50
Drilling jig with stop 6-25156-00-0-9

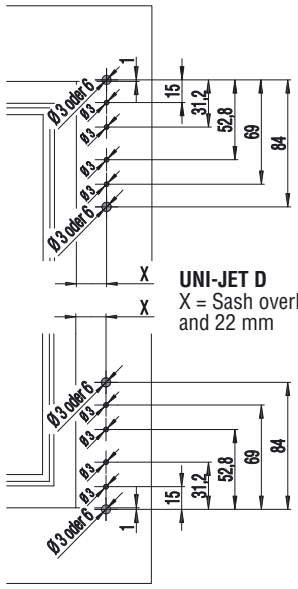

UNI-JET D
X = Sash overlap 18, 20 and 22 mm

Dimensions for stay arm bearing and corner bearing
Drilling jig, drill Ø 3 mm 6-27412-03-0-0
Drilling jig, drill Ø 3 mm and 6 mm 6-27412-53-0-0

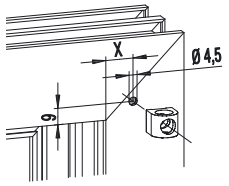

UNI-JET C
Sash overlap 18 mm X = 15,3
Sash overlap 20 mm X = 17,3

Dimensions for stay arm bearing 130 kg
Frame profile
Drilling jig
Sash overlap 18 mm 6-31951-00-0-6
Sash overlap 20 mm 6-33776-00-0-6

Handles DIRIGENT-F [1]

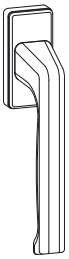

DIRIGENT-F
Spindle 25 6-28072-25-0-*
Spindle 29 6-28072-29-0-*

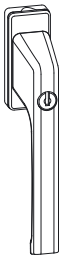

DIRIGENT-F/Z
with push button cylinder, all keys alike
Spindle 29 6-28075-29-0-*

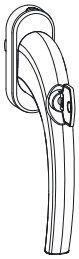

MODENA-F/Z 100 Nm [2]
for security windows and patio doors
Spindle 29 6-34397-29-0-*

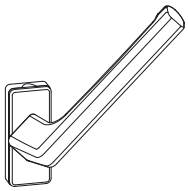

DIRIGENT-F/SP
with 45°position (only D) for slit ventilation
Spindle 29 6-28094-29-0-*

DIRIGENT-F/SG
Spindle 50 8-00694-50-0-7

Rosette/F
inside – flat
6-24913-00-0-*

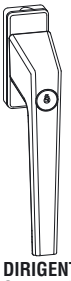

DIRIGENT-F First tilt
Spindle 29 6-31557-29-0-*

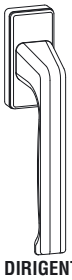

DIRIGENT-F
without spindle
6-28072-00-0-*

DIRIGENT-F/AF,
outside – flat
6-25223-00-0-*

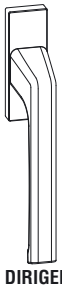

DIRIGENT-F/A,
outside
6-25993-00-0-*

Rosette with CB inside
square K-17205-02-0-*
oval K-17204-02-0-*

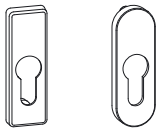

Rosette PZ/A outside
square 9-43605-02-0-*
oval 9-43582-02-0-*

Spindle
FD 56-68 9-26874-56-0-1
FD 69-80 9-26874-69-0-1

Inside/ outside operation
Countersunk screw M 5
FD 50-54 9-13255-60-0-1
FD 55-59 9-13255-65-0-1
FD 60-64 9-13255-70-0-1
FD 65-69 9-13255-75-0-1
FD 70-74 9-13255-80-0-1
FD 75-80 9-13255-85-0-1

Inside operation
Countersunk screw M 5
Spindle 25 9-13255-30-0-1
Spindle 29 9-13255-35-0-1

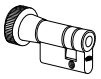

Knob lock
Backset 25 - 50 mm
K-13282-00-0-*

Pull handle outside
9-22921-00-0-*

[1] = More turn handles see part 3 of the present order catalogue.
[2] = Tested to DIN V EN V 1627 for resistance to pull-off and twist-off attempts at 100 Nm.

G.U Face fixed window lock

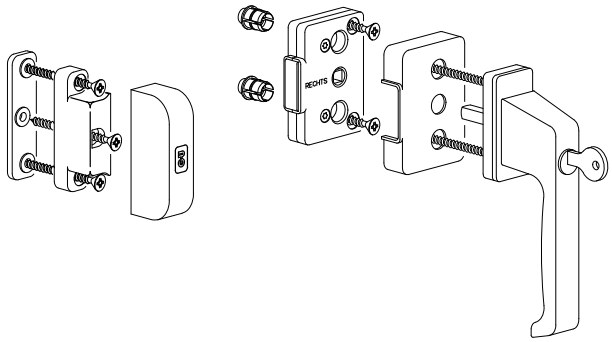

Box of face fixed window lock with turn handle DIRIGENT F/Z
EV 1 K-14662-00-0-11
dark brown K-14662-00-0-5
white K-14662-00-0-7

Contents of box

1 Turn handle DIRIGENT F/Z, lockable
1 Spindle 7 x 75 mm
1 Face fixed lock
1 Cover for face fixed lock
2 Sleeve for Ø 10 mm
2 Sleeve for Ø 12 mm
1 Strike box
1 Cover for strike box
1 Packing 3 mm
1 Packing 4 mm
1 Packing 5 mm
1 Packing 6 mm
7 Spax countersunk screw 5 x 55 mm

JET Slit ventilation catch

Slit ventilation catch

Cover

Catch plate

Fitting requirements JET Slit ventilation catch for aluminium windows

Quantity	Description	PU	Article No.
1	**JET Slit ventilation catch**, with sash overlap	10	K-12223-90-0-*
1	**JET Slit ventilation catch**, without sash overlap	10	K-12216-90-0-*
	Drilling jig	1	6-23861-00-0-0

Working drawing 0-38928

Corner transmissions

Corner transmission S
6-32238-00-0-1
1 ML

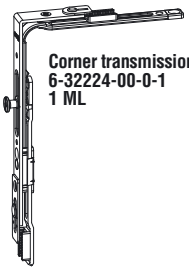

Corner transmission SLK
6-32224-00-0-1
1 ML

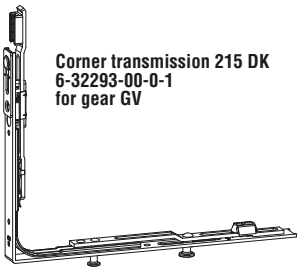

Corner transmission 215 DK
6-32293-00-0-1
for gear GV

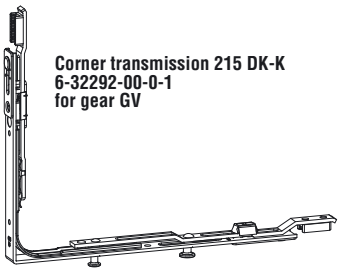

Corner transmission 215 DK-K
6-32292-00-0-1
for gear GV

Corner transmission
6-26743-00-0-1
without ML

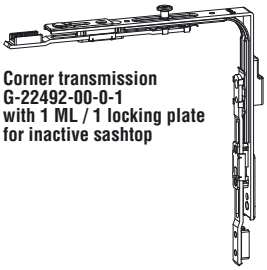

Corner transmission
G-22492-00-0-1
with 1 ML / 1 locking plate
for inactive sashtop

Wedge
9-41796-00-0-1
for locks and
corner transmissions

Wedge
9-41796-00-0-1
for locks and
corner transmissions

Lifting stop 90°
9-33432-00-0-1

Lifting stop 90°
9-33432-00-0-1

Wrong operation safety device (WOSD), sash positioner, wedge plates

WOSD with stop clip
Groove position 9 mm
lh. 6-31657-09-L-1
rh. 6-31657-09-R-1
Groove position 13 mm
lh. 6-31657-13-L-1
rh. 6-31657-13-R-1

Sash positioner with
WOSD
6-29987-00-0-1

Wedge plate
16 mm fitting groove
9-40477-00-0-1

Wedge plate
Rebate shoot bolt ZH
9-40149-00-0-1

Wedge plate
Frame groove 14/18
9-41776-00-0-1
Frame groove 10/14
9-41775-00-0-1

Optional parts for gears

Bottom lock 116 DK
6-33374-00-0-1

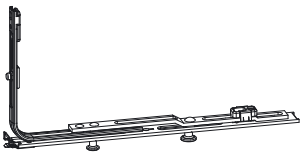

Bottom lock 215 DK
6-32012-00-0-1

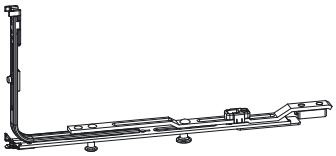

Bottom lock 215 DK-K
6-32013-00-0-1

Lifting stop 90°
9-33432-00-0-1

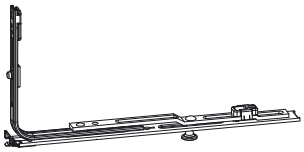

Bottom lock 215
6-32010-00-0-1

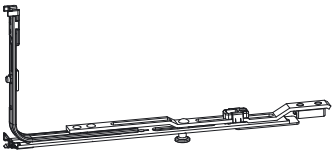

Bottom lock 215 K
6-32011-00-0-1

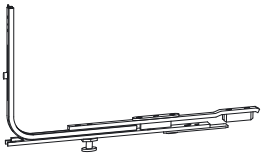

Bottom lock K 160.2 Se
6-28604-00-0-1
Steel mushroom pin

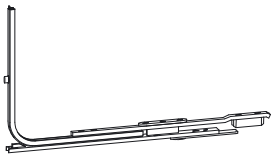

Corner transmission 160
6-26744-00-0-1

Fixing plate 40 mm
9-35697-00-0-1

Fixing plate 80 mm
without wedge 9-39386-00-0-1
with wedge 9-42373-00-0-1

Wedge – ST 68 mm
9-35380-68-0-0

Wedge
9-41796-00-0-1
for locks and
corner transmissions

Wedge plate – rebate clearance 12 mm
6-24201-01-0-1

Optional parts for gears

Gear 15 GK
SRH 1601-1850 mm
Forend 1690 mm
Gear pos. 980 mm
6-33009-00-0-1

Extension 500
6-32142-00-0-1

Extension 250
8-00625-00-0-1

Extension 500 Se
6-29858-00-0-1
Steel mushroom pin

Locking plate
9-30256-00-0-1
alternatively:
Locking plate Se
E-19813-00-0-1

Extension 500
G-21040-00-0-1

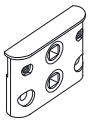

Gear - 5
Overlap mm
15 6-31094-15-0-1
18 6-31094-18-0-1

Countersunk screw
M 5 x 22
9-13255-22-0-1

Extension piece
without ML – 90°
6-32624-00-0-1

Extension piece
without ML – 180°
6-32303-00-0-1

Extension piece
with ML – 90°
6-32104-00-0-1

Extension piece
with ML – 180°
6-32105-00-0-1

Tilt-locking plate
for frame groove
14/18
9-41778-00-0-1

Extension piece, bottom
with tilt function
SRH mm
480- 590 6-32155-01-0-1
591- 950 6-32155-02-0-1
951-2450 6-32155-03-0-1

Rod guide aluminium
0-1198A-00-0-0

Logo clip
E-21062-00-0-6
for gears
(Manufacturer logo on request)

Optional parts for double stay arms

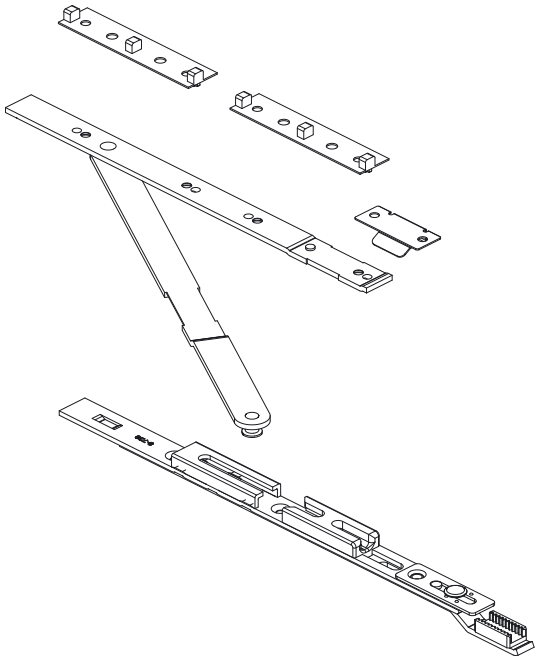

Stay arm connecting plate and additional stay arm for tilt-turn sashes [1] acc. to sash width for schemes A to D – at UNI-JET C with sash weight over 100 kg

Qty. A	B	C	D	Description SRW [1]	Forend	ML	PU	Article No. Stay arm	Add. stay arm
				Stay arm / Add. stay arm				**Stay arm**	**Add. stay arm**
1	1	1	1	1201-1450	1290	1	10	6-31512-10-0-1	8-00734-00-0-1
		1	1	1451-1600	1290	1	10	6-31512-12-0-1	8-00734-00-0-1
1	1	1	1	**Packing** for additional stay arm					
				Groove position 9			100	E-20048-10-0-0	
				Groove position13			100	E-20048-55-0-0	

Stay arm connecting plate and additional stay arm for first tilt sashes [1] acc. to sash width for schemes A to D – at UNI-JET C with sash weight over 100 kg

Qty. A	B	C	D	Description SRW [1]	Forend	ML	PU	Article No. Stay arm	Add. stay arm
				Stay arm / Add. stay arm				**Stay arm**	**Add. stay arm**
1	1	1	1	1201-1450	1290	1	10	6-31512-10-0-1	G-45995-00-0-1
		1	1	1451-1600	1290	1	10	6-31512-12-0-1	G-45995-00-0-1
1	1	1	1	**Packing** for additional stay arm					
				Groove position 9			100	E-20048-10-0-1	
				Groove position13			100	E-20048-55-0-1	

UNI-JET C – Assembly according to working drawing 0-44708
[1] = Generally required: sash rebate width SWR over 1301 mm and sash weight over 100 kg

Slit ventilation spring – SRW 500-750 mm – opening width approx. 21 mm
DIN lh 9-42768-33-L-1
DIN rh 9-42768-33-R-1

Slit ventilation spring – SRW 751-1600 mm – opening width approx. 14 and 26 mm
9-41750-63-0-1

Opening restrictor
8-00775-00-0-1

Middle hinges

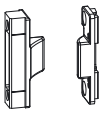

Middle hinge made of PVC concealed

Groove position 9 Frame groove 14/18
Dim. "B" 3,5 mm K-16598-00-0-1
Dim. "B" 4,0 mm K-16599-00-0-1

Groove position 9 Frame groove 10/14
Dim. "B" 3,5 mm K-17677-00-0-1

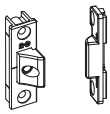

Middle hinge concealed, adjustable

Sash part, adjustable 6-34229-00-0-1

Frame part

Groove position 9 Frame groove 14/18
Dim. "B" 3,5 mm 9-40871-07-0-1
Dim. "B" 4,0 mm 9-40871-08-0-1

Groove position 9 Frame groove 10/14
9-40871-09-0-1

Groove position 13 Frame groove 14/18
Dim. "B" 3,5 mm 9-40565-15-0-1
Dim. "B" 4,0 mm 9-40565-14-0-1

Groove position 13 Frame groove 10/14
9-40565-13-0-1

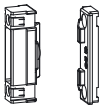

Middle hinge of zinc concealed, adjustable

Groove position 9, frame groove 14/18
Sash part, adjustable 6-29211-00-0-1
Frame part 9-41959-00-0-1

Optional parts for security fittings

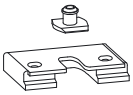

Passive anti-lifting security device

Mushroom pin for rebate clearance:
12 mm 9-32103-00-0-1
13 mm 9-32102-00-0-1

Mushroom pin locking plate
6-25000-00-0-1

Anti-drill escutcheon

9-41749-00-0-0
for gear 15

Door catches

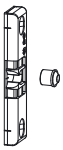

Door catch
Gr. pos. 9 K-17044-00-0-1

1 Door catch
1 Roller

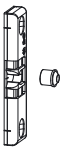

Door catch
Gr. pos. 13 K-17117-00-0-1

1 Door catch
1 Roller

Packing for door catch
Gr. pos. 9 E-20048-10-0-1
Gr. pos. 13 E-20048-55-0-1

Fitting groove 16 mm

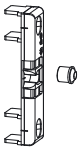

Door catch
K-17228-00-0-1

1 Door catch
1 Roller

Rebate shoot bolt ZH

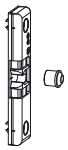

Door catch
K-17229-00-0-1

1 Door catch
1 Roller

Shoot bolts

bottom
6-22916-00-0-1

top
6-22917-00-0-1

Accessories for alarm systems

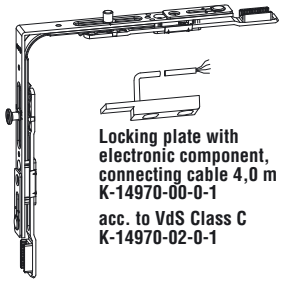

Locking plate with electronic component, connecting cable 4,0 m
K-14970-00-0-1

acc. to VdS Class C
K-14970-02-0-1

Corner transmission
1 mushroom pin – 1 magnetic pin
6-32093-00-0-1

acc. to VdS Class C
6-32093-01-0-1

Extension 500
1 magnetic pin
6-32826-00-0-1

Extension 131
1 magnetic pin
6-33822-00-0-1

Working drawing 0-44518

Integrated slit ventilation IS

Corner transmission IS
lh 6-32087-00-L-1
rh 6-32087-00-R-1

Packing
on request

Locking plate IS
lh G-13261-00-L-1
rh G-13261-00-R-1

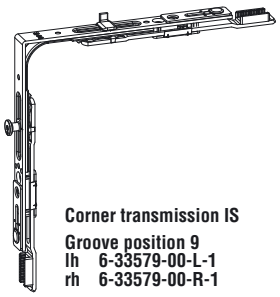

Corner transmission IS

Groove position 9
lh 6-33579-00-L-1
rh 6-33579-00-R-1

Groove position 13
lh 6-33580-00-L-1
rh 6-33580-00-R-1

Locking plate IS
on request

Locking plates

Description	Dim.	Length mm	Illustration	Groove position 9 Frame groove 14/18	Groove position 9 Frame groove 10/14	Groove position 13 Frame groove 14/18	Groove position 13 Frame groove 10/14
Standard locking plate Frame – zinc to clamp	A = 2,0 A = 1,5	55 55		6-32628-00-0-1 6-32628-01-0-1	6-32628-00-0-1 6-32628-01-0-1	6-33278-00-0-1 6-33278-01-0-1	6-33278-00-0-1 6-33278-01-0-1
Standard locking plate Frame – zinc screw-on version	B = 4,0 B = 3,5	55 55 55		9-45219-14-0-1 9-45219-15-0-1	9-45219-10-0-1		
Mushroom locking plate Se Frame – steel	B = 4,0 B = 3,5	55 55 55		6-27674-48-0-1 6-27674-49-0-1	6-27674-62-0-1	6-33398-00-0-1	6-27831-44-0-1
Mushroom locking plate Ahs Frame – zinc to clamp	B = 4,0 B = 3,5	55 55 55		6-32225-14-0-1 6-32225-15-0-1	6-32225-10-0-1		
Locking plate for false mullion Fitting groove 16 mm – zinc		55		E-13534-12-0-1	E-13534-12-0-1	E-13534-12-0-1	E-13534-12-0-1
Locking plate for false mullion Se Fitting groove 16 mm – steel		55		6-27831-52-0-1	6-27831-52-0-1	6-27831-52-0-1	6-27831-52-0-1
Locking plate for shoot bolts Frame – zinc to clamp		33		6-30961-00-0-1	6-30961-00-0-1	G-19658-03-0-1	G-19658-03-0-1
Mushroom locking plate Se first tilt Frame – steel Packing		100		6-32668-00-0-1 E-20048-10-0-1	6-32668-00-0-1 E-20048-10-0-1	6-32668-00-0-1 E-20048-55-0-1	6-32668-00-0-1 E-20048-55-0-1

Window friction stay EGO-B, EGO-FL

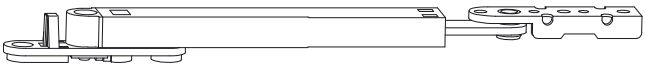

Window friction stay EGO-B, EGO-FL

Description	SWR mm	PU	Article No.
Window friction stay EGO-B with sash restrictor from 5° and max. opening angle 90° for tilt-turn and side hung	500-750 751-	20 20	6-28835-01-0-1 6-28835-00-0-1
Window friction stay EGO-FL max. opening angle 90°, with swing free function up to 85° when opening and constant swing free function when closing the sash, for tilt-turn and side hung sashes	500-750 751-	20 20	6-28730-01-0-1 6-28730-00-0-1

Window friction stay EGO-B, EGO-FL Bag of profile accessories

Description	PU	Article No.
Profile systems with frame groove 14/18, 12/15, 10/14 and sash groove 15/20 resp. fitting groove 16 mm Akotherm, Alco, Almaco, Alumil, Aluminco Brökelmann Domal Elvial, Erbslöh, Etem, Europa, Exalco Heroal Kawneer, Kubal Menziken Nordall Ponzio Redal, Remy Claeys, Reynolds Sykon Thyssen Schulte, TS-Aluminium VAW	20	K-14686-00-0-1
Profile systems Hartmann, Hueck MKF TKI Schüco	20	K-14684-00-0-1
Profile system Wicona	20	K-14685-00-0-1

Fixed gear position, groove position 9 and 13 mm

Basic security

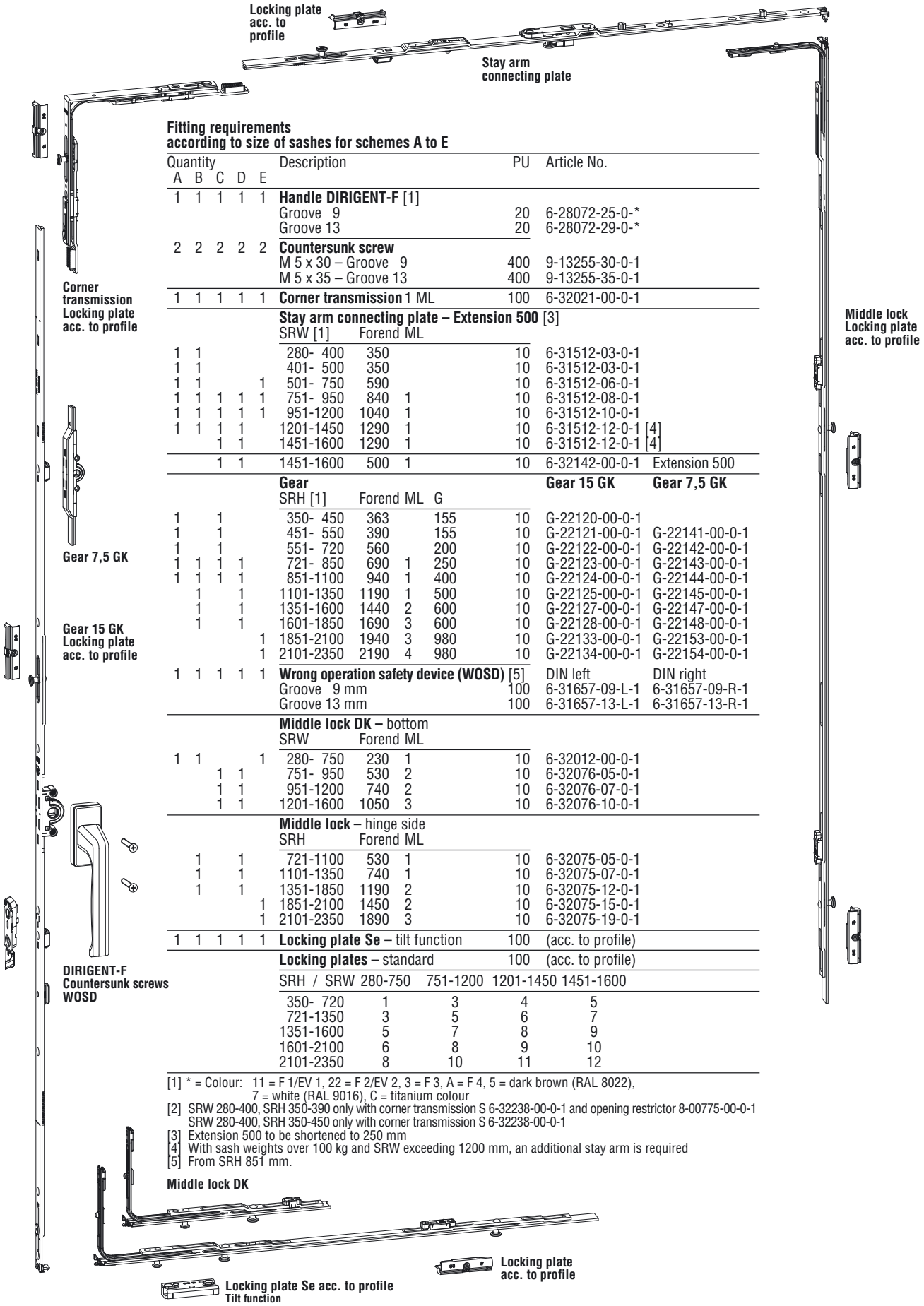

Fitting requirements according to size of sashes for schemes A to E

Quantity A	B	C	D	E	Description				PU	Article No.	
1	1	1	1	1	**Handle DIRIGENT-F** [1]						
					Groove 9				20	6-28072-25-0-*	
					Groove 13				20	6-28072-29-0-*	
2	2	2	2	2	**Countersunk screw**						
					M 5 x 30 – Groove 9				400	9-13255-30-0-1	
					M 5 x 35 – Groove 13				400	9-13255-35-0-1	
1	1	1	1	1	**Corner transmission** 1 ML				100	6-32021-00-0-1	
					Stay arm connecting plate – Extension 500 [3]						
					SRW [1]	Forend	ML				
1	1				280- 400	350			10	6-31512-03-0-1	
1	1				401- 500	350			10	6-31512-03-0-1	
1	1			1	501- 750	590			10	6-31512-06-0-1	
1	1	1	1	1	751- 950	840	1		10	6-31512-08-0-1	
1	1	1	1	1	951-1200	1040	1		10	6-31512-10-0-1	
1	1	1	1		1201-1450	1290	1		10	6-31512-12-0-1 [4]	
		1	1		1451-1600	1290	1		10	6-31512-12-0-1 [4]	
		1	1		1451-1600	500	1		10	6-32142-00-0-1	Extension 500
					Gear					**Gear 15 GK**	**Gear 7,5 GK**
					SRH [1]	Forend	ML	G			
1		1			350- 450	363		155	10	G-22120-00-0-1	
1		1			451- 550	390		155	10	G-22121-00-0-1	G-22141-00-0-1
1		1			551- 720	560		200	10	G-22122-00-0-1	G-22142-00-0-1
1	1	1	1		721- 850	690	1	250	10	G-22123-00-0-1	G-22143-00-0-1
1	1	1	1		851-1100	940	1	400	10	G-22124-00-0-1	G-22144-00-0-1
	1		1		1101-1350	1190	1	500	10	G-22125-00-0-1	G-22145-00-0-1
	1		1		1351-1600	1440	2	600	10	G-22127-00-0-1	G-22147-00-0-1
	1		1		1601-1850	1690	3	600	10	G-22128-00-0-1	G-22148-00-0-1
				1	1851-2100	1940	3	980	10	G-22133-00-0-1	G-22153-00-0-1
				1	2101-2350	2190	4	980	10	G-22134-00-0-1	G-22154-00-0-1
1	1	1	1	1	**Wrong operation safety device (WOSD)** [5]					DIN left	DIN right
					Groove 9 mm				100	6-31657-09-L-1	6-31657-09-R-1
					Groove 13 mm				100	6-31657-13-L-1	6-31657-13-R-1
					Middle lock DK – bottom						
					SRW	Forend	ML				
1	1			1	280- 750	230	1		10	6-32012-00-0-1	
		1	1		751- 950	530	2		10	6-32076-05-0-1	
		1	1		951-1200	740	2		10	6-32076-07-0-1	
		1	1		1201-1600	1050	3		10	6-32076-10-0-1	
					Middle lock – hinge side						
					SRH	Forend	ML				
	1		1		721-1100	530	1		10	6-32075-05-0-1	
	1		1		1101-1350	740	1		10	6-32075-07-0-1	
	1		1		1351-1850	1190	2		10	6-32075-12-0-1	
				1	1851-2100	1450	2		10	6-32075-15-0-1	
				1	2101-2350	1890	3		10	6-32075-19-0-1	
1	1	1	1	1	**Locking plate Se** – tilt function				100	(acc. to profile)	
					Locking plates – standard				100	(acc. to profile)	

SRH / SRW	280-750	751-1200	1201-1450	1451-1600
350- 720	1	3	4	5
721-1350	3	5	6	7
1351-1600	5	7	8	9
1601-2100	6	8	9	10
2101-2350	8	10	11	12

[1] * = Colour: 11 = F 1/EV 1, 22 = F 2/EV 2, 3 = F 3, A = F 4, 5 = dark brown (RAL 8022), 7 = white (RAL 9016), C = titanium colour
[2] SRW 280-400, SRH 350-390 only with corner transmission S 6-32238-00-0-1 and opening restrictor 8-00775-00-0-1
SRW 280-400, SRH 350-450 only with corner transmission S 6-32238-00-0-1
[3] Extension 500 to be shortened to 250 mm
[4] With sash weights over 100 kg and SRW exceeding 1200 mm, an additional stay arm is required
[5] From SRH 851 mm.

Fixed gear position, groove position 9 and 13 mm

Basic security

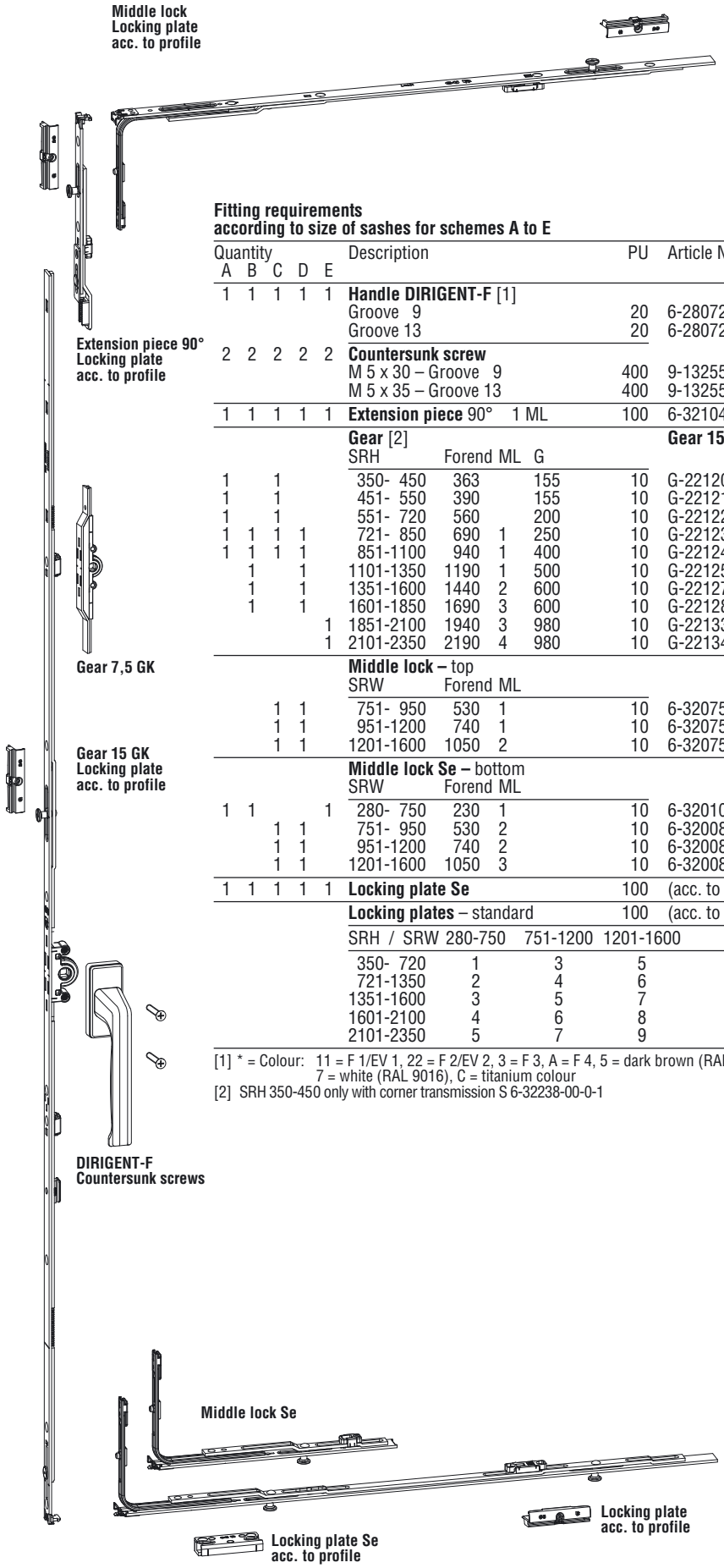

Fitting requirements according to size of sashes for schemes A to E

Quantity A	B	C	D	E	Description				PU	Article No.	
1	1	1	1	1	**Handle DIRIGENT-F** [1]						
					Groove 9				20	6-28072-25-0-*	
					Groove 13				20	6-28072-29-0-*	
2	2	2	2	2	**Countersunk screw**						
					M 5 x 30 – Groove 9				400	9-13255-30-0-1	
					M 5 x 35 – Groove 13				400	9-13255-35-0-1	
1	1	1	1	1	**Extension piece** 90° 1 ML				100	6-32104-00-0-1	
					Gear [2]					**Gear 15 GK**	**Gear 7,5 GK**
					SRH	Forend	ML	G			
1		1			350- 450	363		155	10	G-22120-00-0-1	
1		1			451- 550	390		155	10	G-22121-00-0-1	G-22141-00-0-1
1		1			551- 720	560		200	10	G-22122-00-0-1	G-22142-00-0-1
1	1	1	1		721- 850	690	1	250	10	G-22123-00-0-1	G-22143-00-0-1
1	1	1	1		851-1100	940	1	400	10	G-22124-00-0-1	G-22144-00-0-1
	1		1		1101-1350	1190	1	500	10	G-22125-00-0-1	G-22145-00-0-1
	1		1		1351-1600	1440	2	600	10	G-22127-00-0-1	G-22147-00-0-1
	1		1		1601-1850	1690	3	600	10	G-22128-00-0-1	G-22148-00-0-1
				1	1851-2100	1940	3	980	10	G-22133-00-0-1	G-22153-00-0-1
				1	2101-2350	2190	4	980	10	G-22134-00-0-1	G-22154-00-0-1
					Middle lock – top						
					SRW	Forend	ML				
		1	1		751- 950	530	1		10	6-32075-05-0-1	
		1	1		951-1200	740	1		10	6-32075-07-0-1	
		1	1		1201-1600	1050	2		10	6-32075-10-0-1	
					Middle lock Se – bottom						
					SRW	Forend	ML				
1	1			1	280- 750	230	1		10	6-32010-00-0-1	
		1	1		751- 950	530	2		10	6-32008-05-0-1	
		1	1		951-1200	740	2		10	6-32008-07-0-1	
		1	1		1201-1600	1050	3		10	6-32008-10-0-1	
1	1	1	1	1	**Locking plate Se**				100	(acc. to profile)	
					Locking plates – standard				100	(acc. to profile)	

SRH / SRW	280-750	751-1200	1201-1600
350- 720	1	3	5
721-1350	2	4	6
1351-1600	3	5	7
1601-2100	4	6	8
2101-2350	5	7	9

[1] * = Colour: 11 = F 1/EV 1, 22 = F 2/EV 2, 3 = F 3, A = F 4, 5 = dark brown (RAL 8022), 7 = white (RAL 9016), C = titanium colour

[2] SRH 350-450 only with corner transmission S 6-32238-00-0-1

Fixed gear position, groove position 9 and 13 mm

Basic security

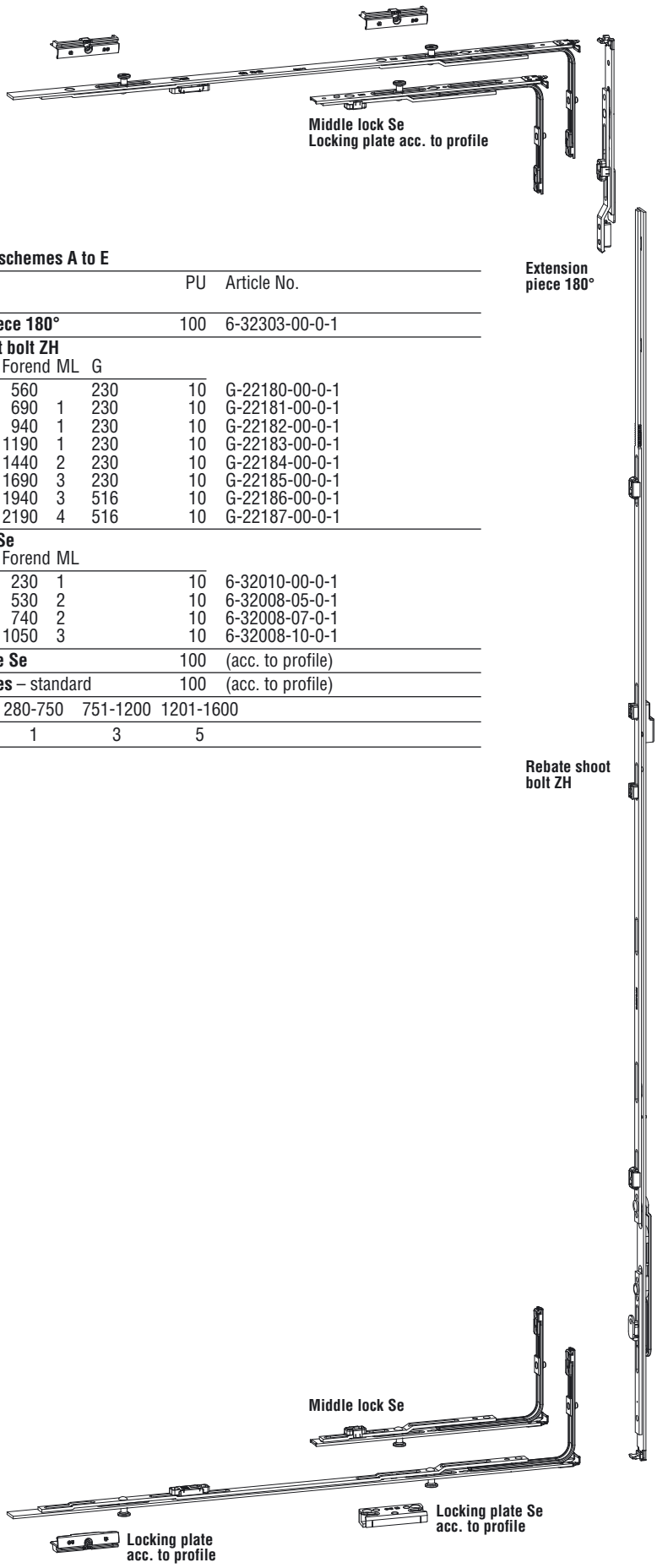

Fitting requirements according to size of sashes for schemes A to E

Quantity A	B	C	D	E	Description				PU	Article No.
1	1	1	1	1	**Extension piece 180°**				100	6-32303-00-0-1
					Rebate shoot bolt ZH					
					SRH	Forend	ML	G		
1		1			470- 720	560		230	10	G-22180-00-0-1
1	1	1	1		721- 850	690	1	230	10	G-22181-00-0-1
1	1	1	1		851-1100	940	1	230	10	G-22182-00-0-1
	1		1		1101-1350	1190	1	230	10	G-22183-00-0-1
	1		1		1351-1600	1440	2	230	10	G-22184-00-0-1
	1		1		1601-1850	1690	3	230	10	G-22185-00-0-1
				1	1851-2100	1940	3	516	10	G-22186-00-0-1
				1	2101-2350	2190	4	516	10	G-22187-00-0-1
					Middle lock Se					
					SRW	Forend	ML			
2	2			2	280- 750	230	1		10	6-32010-00-0-1
		2	2		751- 950	530	2		10	6-32008-05-0-1
		2	2		951-1200	740	2		10	6-32008-07-0-1
		2	2		1201-1600	1050	3		10	6-32008-10-0-1
1	1	1	1	1	**Locking plate Se**				100	(acc. to profile)
					Locking plates – standard				100	(acc. to profile)

SRH / SRW	280-750	751-1200	1201-1600
470-2350	1	3	5

Fixed gear position, groove position 9 and 13 mm

Basic security

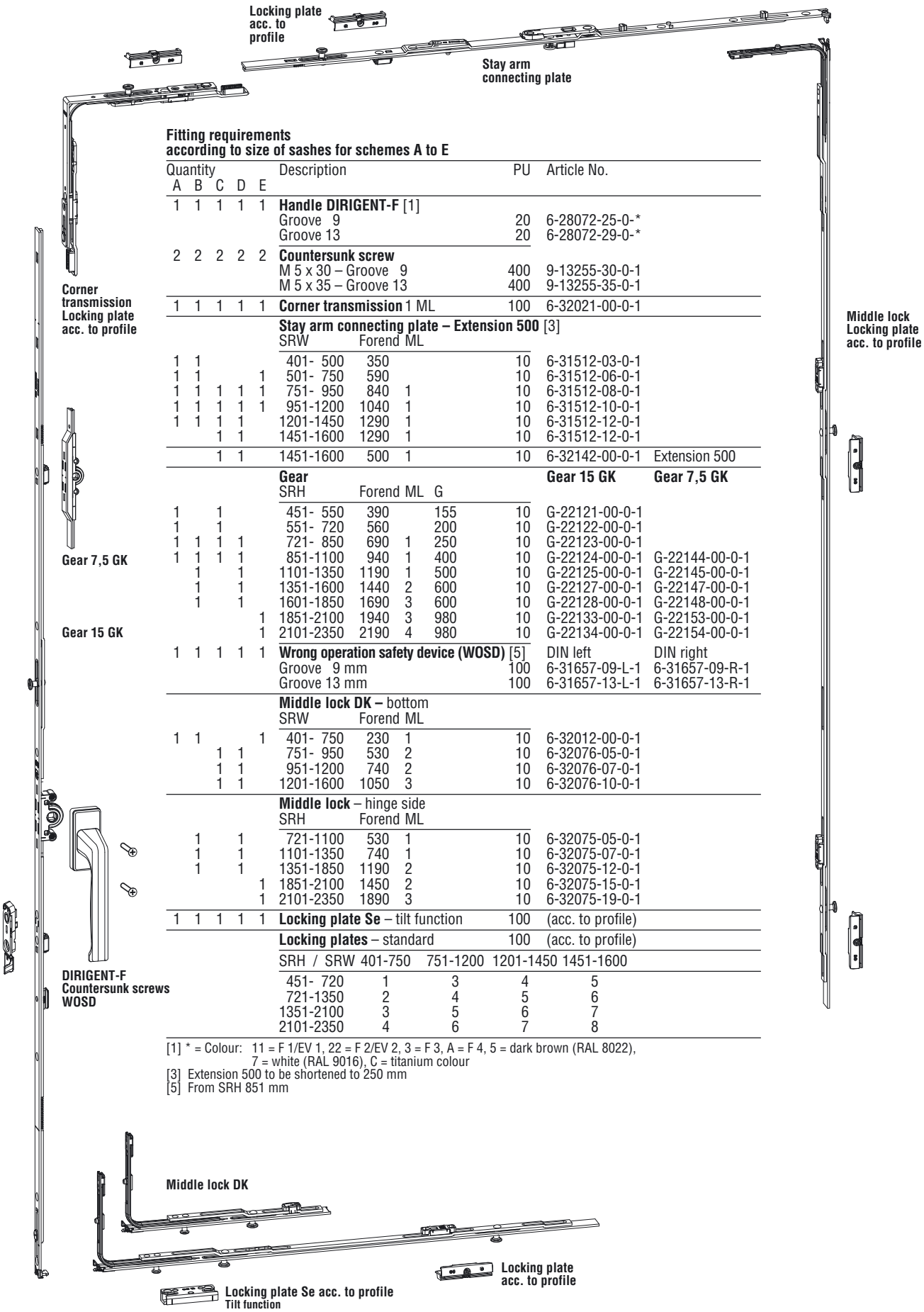

Fitting requirements according to size of sashes for schemes A to E

Quantity A	B	C	D	E	Description				PU	Article No.	
1	1	1	1	1	**Handle DIRIGENT-F** [1]						
					Groove 9				20	6-28072-25-0-*	
					Groove 13				20	6-28072-29-0-*	
2	2	2	2	2	**Countersunk screw**						
					M 5 x 30 – Groove 9				400	9-13255-30-0-1	
					M 5 x 35 – Groove 13				400	9-13255-35-0-1	
1	1	1	1	1	**Corner transmission** 1 ML				100	6-32021-00-0-1	
					Stay arm connecting plate – Extension 500 [3]						
					SRW	Forend	ML				
1	1				401- 500	350			10	6-31512-03-0-1	
1	1			1	501- 750	590			10	6-31512-06-0-1	
1	1	1	1	1	751- 950	840	1		10	6-31512-08-0-1	
1	1	1	1	1	951-1200	1040	1		10	6-31512-10-0-1	
1	1	1	1		1201-1450	1290	1		10	6-31512-12-0-1	
		1	1		1451-1600	1290	1		10	6-31512-12-0-1	
		1	1		1451-1600	500	1		10	6-32142-00-0-1	Extension 500
					Gear					**Gear 15 GK**	**Gear 7,5 GK**
					SRH	Forend	ML	G			
1		1			451- 550	390		155	10	G-22121-00-0-1	
1		1			551- 720	560		200	10	G-22122-00-0-1	
1	1	1	1		721- 850	690	1	250	10	G-22123-00-0-1	
1	1	1	1		851-1100	940	1	400	10	G-22124-00-0-1	G-22144-00-0-1
	1		1		1101-1350	1190	1	500	10	G-22125-00-0-1	G-22145-00-0-1
	1		1		1351-1600	1440	2	600	10	G-22127-00-0-1	G-22147-00-0-1
	1		1		1601-1850	1690	3	600	10	G-22128-00-0-1	G-22148-00-0-1
				1	1851-2100	1940	3	980	10	G-22133-00-0-1	G-22153-00-0-1
				1	2101-2350	2190	4	980	10	G-22134-00-0-1	G-22154-00-0-1
1	1	1	1	1	**Wrong operation safety device (WOSD)** [5]					DIN left	DIN right
					Groove 9 mm				100	6-31657-09-L-1	6-31657-09-R-1
					Groove 13 mm				100	6-31657-13-L-1	6-31657-13-R-1
					Middle lock DK – bottom						
					SRW	Forend	ML				
1	1			1	401- 750	230	1		10	6-32012-00-0-1	
		1	1		751- 950	530	2		10	6-32076-05-0-1	
		1	1		951-1200	740	2		10	6-32076-07-0-1	
		1	1		1201-1600	1050	3		10	6-32076-10-0-1	
					Middle lock – hinge side						
					SRH	Forend	ML				
	1		1		721-1100	530	1		10	6-32075-05-0-1	
	1		1		1101-1350	740	1		10	6-32075-07-0-1	
	1		1		1351-1850	1190	2		10	6-32075-12-0-1	
				1	1851-2100	1450	2		10	6-32075-15-0-1	
				1	2101-2350	1890	3		10	6-32075-19-0-1	
1	1	1	1	1	**Locking plate Se** – tilt function				100	(acc. to profile)	
					Locking plates – standard				100	(acc. to profile)	

SRH / SRW	401-750	751-1200	1201-1450	1451-1600
451- 720	1	3	4	5
721-1350	2	4	5	6
1351-2100	3	5	6	7
2101-2350	4	6	7	8

[1] * = Colour: 11 = F 1/EV 1, 22 = F 2/EV 2, 3 = F 3, A = F 4, 5 = dark brown (RAL 8022), 7 = white (RAL 9016), C = titanium colour
[3] Extension 500 to be shortened to 250 mm
[5] From SRH 851 mm

Fixed gear position, groove position 9 and 13 mm

Basic security

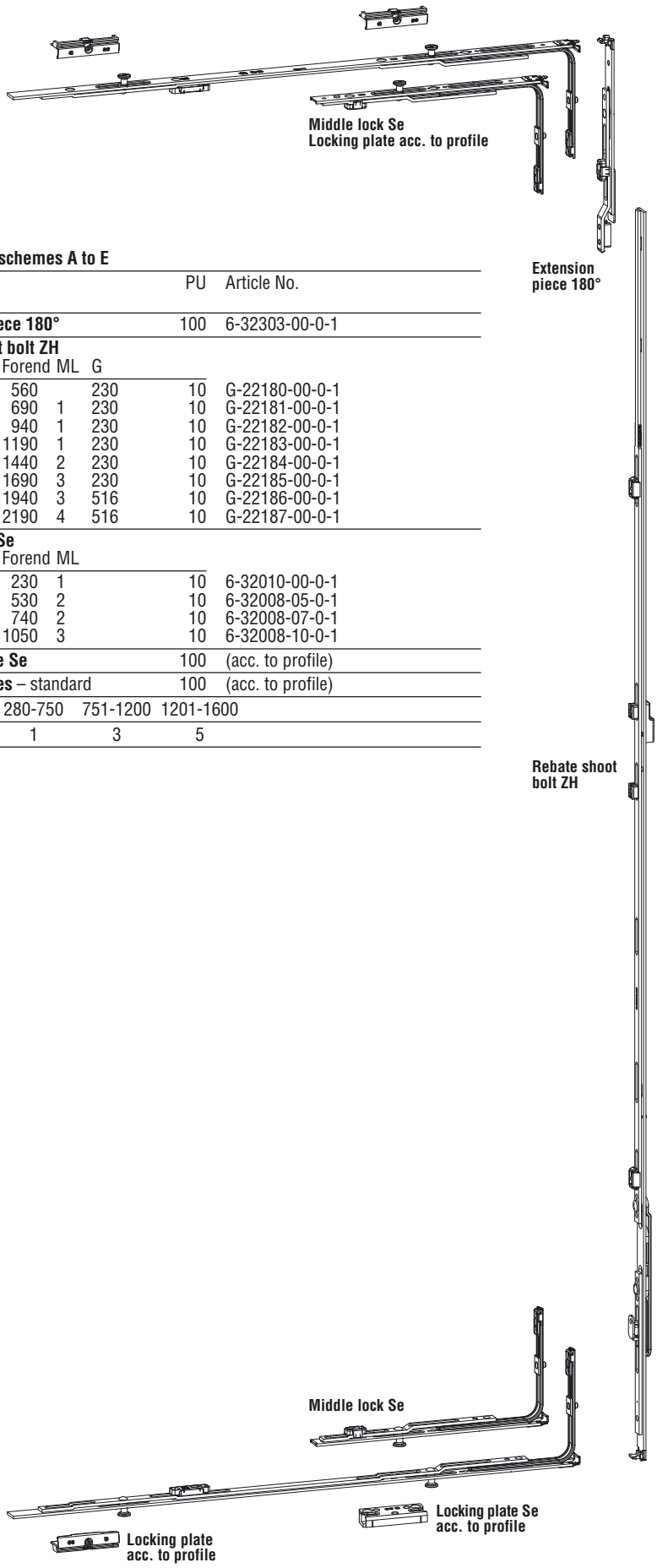

Fitting requirements according to size of sashes for schemes A to E

Quantity A	B	C	D	E	Description				PU	Article No.
1	1	1	1	1	**Extension piece 180°**				100	6-32303-00-0-1
					Rebate shoot bolt ZH					
					SRH	Forend	ML	G		
1		1			470- 720	560		230	10	G-22180-00-0-1
1	1	1	1		721- 850	690	1	230	10	G-22181-00-0-1
1	1	1	1		851-1100	940	1	230	10	G-22182-00-0-1
	1		1		1101-1350	1190	1	230	10	G-22183-00-0-1
	1		1		1351-1600	1440	2	230	10	G-22184-00-0-1
	1		1		1601-1850	1690	3	230	10	G-22185-00-0-1
				1	1851-2100	1940	3	516	10	G-22186-00-0-1
				1	2101-2350	2190	4	516	10	G-22187-00-0-1
					Middle lock Se					
					SRW	Forend	ML			
2	2			2	280- 750	230	1		10	6-32010-00-0-1
		2	2		751- 950	530	2		10	6-32008-05-0-1
		2	2		951-1200	740	2		10	6-32008-07-0-1
		2	2		1201-1600	1050	3		10	6-32008-10-0-1
1	1	1	1	1	**Locking plate Se**				100	(acc. to profile)
					Locking plates – standard				100	(acc. to profile)

SRH / SRW	280-750	751-1200	1201-1600
470-2350	1	3	5

Fixed gear position, groove position 9 and 13 mm

Basic security

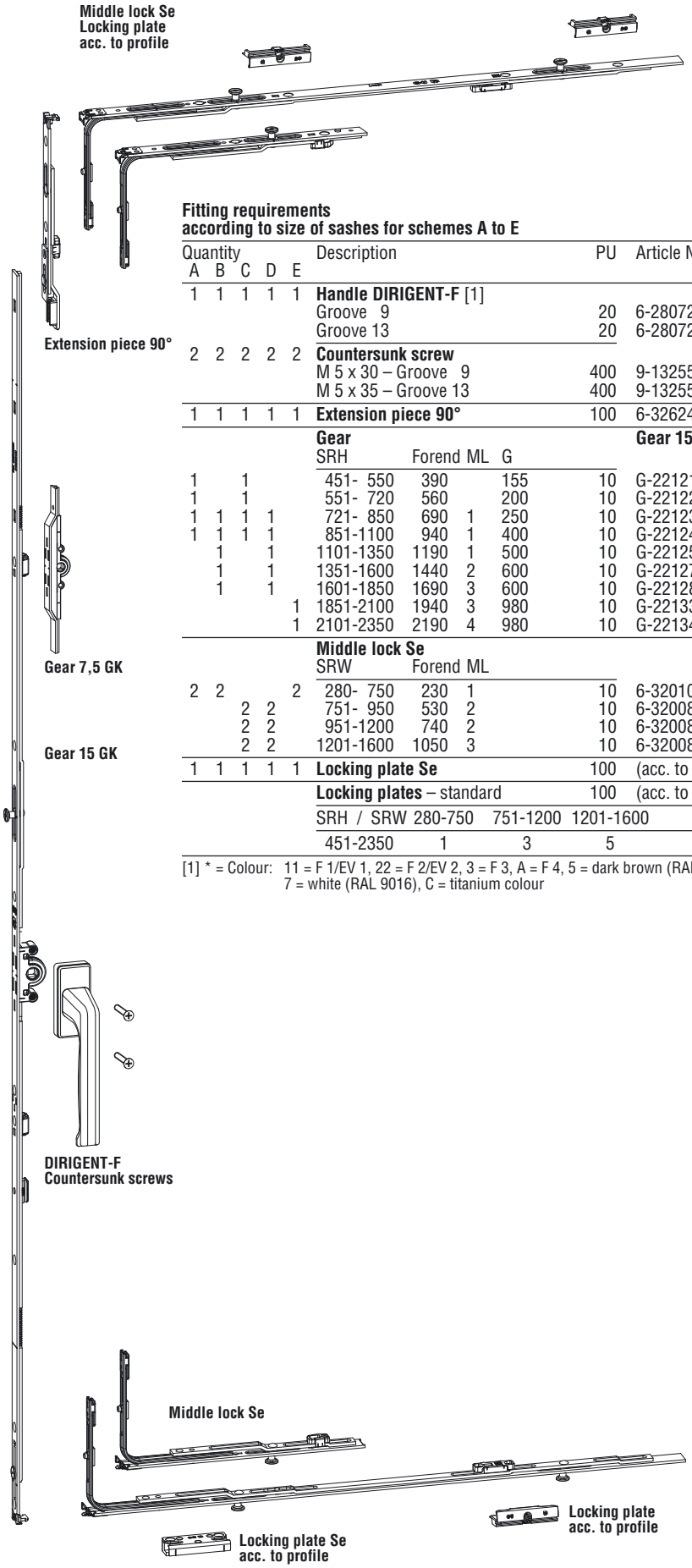

Fitting requirements according to size of sashes for schemes A to E

Quantity A	B	C	D	E	Description				PU	Article No.	
1	1	1	1	1	**Handle DIRIGENT-F** [1]						
					Groove 9				20	6-28072-25-0-*	
					Groove 13				20	6-28072-29-0-*	
2	2	2	2	2	**Countersunk screw**						
					M 5 x 30 – Groove 9				400	9-13255-30-0-1	
					M 5 x 35 – Groove 13				400	9-13255-35-0-1	
1	1	1	1	1	**Extension piece 90°**				100	6-32624-00-0-1	
					Gear					**Gear 15 GK**	**Gear 7,5 GK**
					SRH	Forend	ML	G			
1		1			451- 550	390		155	10	G-22121-00-0-1	
1		1			551- 720	560		200	10	G-22122-00-0-1	
1	1	1	1		721- 850	690	1	250	10	G-22123-00-0-1	
1	1	1	1		851-1100	940	1	400	10	G-22124-00-0-1	G-22144-00-0-1
	1		1		1101-1350	1190	1	500	10	G-22125-00-0-1	G-22145-00-0-1
	1		1		1351-1600	1440	2	600	10	G-22127-00-0-1	G-22147-00-0-1
	1		1		1601-1850	1690	3	600	10	G-22128-00-0-1	G-22148-00-0-1
				1	1851-2100	1940	3	980	10	G-22133-00-0-1	G-22153-00-0-1
				1	2101-2350	2190	4	980	10	G-22134-00-0-1	G-22154-00-0-1
					Middle lock Se						
					SRW	Forend	ML				
2	2			2	280- 750	230	1		10	6-32010-00-0-1	
		2	2		751- 950	530	2		10	6-32008-05-0-1	
		2	2		951-1200	740	2		10	6-32008-07-0-1	
		2	2		1201-1600	1050	3		10	6-32008-10-0-1	
1	1	1	1	1	**Locking plate Se**				100	(acc. to profile)	
					Locking plates – standard				100	(acc. to profile)	

SRH / SRW	280-750	751-1200	1201-1600
451-2350	1	3	5

[1] * = Colour: 11 = F 1/EV 1, 22 = F 2/EV 2, 3 = F 3, A = F 4, 5 = dark brown (RAL 8022), 7 = white (RAL 9016), C = titanium colour

Fixed gear position, groove position 9 and 13 mm

WK 2

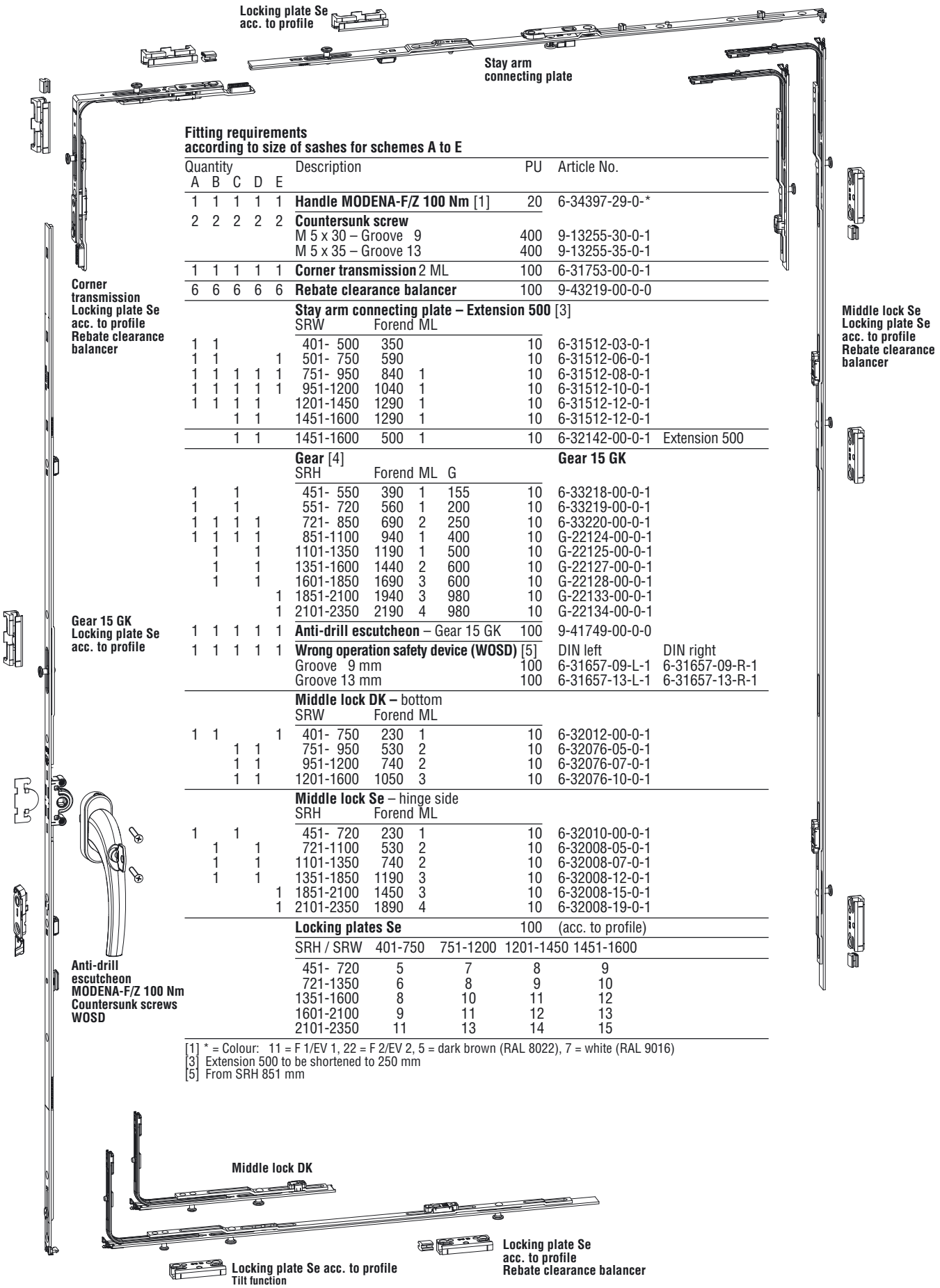

Fitting requirements according to size of sashes for schemes A to E

Quantity A	B	C	D	E	Description	PU	Article No.	
1	1	1	1	1	**Handle MODENA-F/Z 100 Nm** [1]	20	6-34397-29-0-*	
2	2	2	2	2	**Countersunk screw**			
					M 5 x 30 – Groove 9	400	9-13255-30-0-1	
					M 5 x 35 – Groove 13	400	9-13255-35-0-1	
1	1	1	1	1	**Corner transmission** 2 ML	100	6-31753-00-0-1	
6	6	6	6	6	**Rebate clearance balancer**	100	9-43219-00-0-0	
					Stay arm connecting plate – Extension 500 [3]			
					SRW / Forend / ML			
1	1				401- 500 / 350	10	6-31512-03-0-1	
1	1			1	501- 750 / 590	10	6-31512-06-0-1	
1	1	1	1	1	751- 950 / 840 / 1	10	6-31512-08-0-1	
1	1	1	1	1	951-1200 / 1040 / 1	10	6-31512-10-0-1	
1	1	1	1		1201-1450 / 1290 / 1	10	6-31512-12-0-1	
		1	1		1451-1600 / 1290 / 1	10	6-31512-12-0-1	
		1	1		1451-1600 / 500 / 1	10	6-32142-00-0-1	Extension 500
					Gear [4]		**Gear 15 GK**	
					SRH / Forend / ML / G			
1		1			451- 550 / 390 / 1 / 155	10	6-33218-00-0-1	
1		1			551- 720 / 560 / 1 / 200	10	6-33219-00-0-1	
1	1	1	1		721- 850 / 690 / 2 / 250	10	6-33220-00-0-1	
1	1	1	1		851-1100 / 940 / 1 / 400	10	G-22124-00-0-1	
	1		1		1101-1350 / 1190 / 1 / 500	10	G-22125-00-0-1	
	1		1		1351-1600 / 1440 / 2 / 600	10	G-22127-00-0-1	
	1		1		1601-1850 / 1690 / 3 / 600	10	G-22128-00-0-1	
				1	1851-2100 / 1940 / 3 / 980	10	G-22133-00-0-1	
				1	2101-2350 / 2190 / 4 / 980	10	G-22134-00-0-1	
1	1	1	1	1	**Anti-drill escutcheon** – Gear 15 GK	100	9-41749-00-0-0	
1	1	1	1	1	**Wrong operation safety device (WOSD)** [5]		DIN left	DIN right
					Groove 9 mm	100	6-31657-09-L-1	6-31657-09-R-1
					Groove 13 mm	100	6-31657-13-L-1	6-31657-13-R-1
					Middle lock DK – bottom			
					SRW / Forend / ML			
1	1			1	401- 750 / 230 / 1	10	6-32012-00-0-1	
		1	1		751- 950 / 530 / 2	10	6-32076-05-0-1	
		1	1		951-1200 / 740 / 2	10	6-32076-07-0-1	
		1	1		1201-1600 / 1050 / 3	10	6-32076-10-0-1	
					Middle lock Se – hinge side			
					SRH / Forend / ML			
1		1			451- 720 / 230 / 1	10	6-32010-00-0-1	
	1		1		721-1100 / 530 / 2	10	6-32008-05-0-1	
	1		1		1101-1350 / 740 / 2	10	6-32008-07-0-1	
	1		1		1351-1850 / 1190 / 3	10	6-32008-12-0-1	
				1	1851-2100 / 1450 / 3	10	6-32008-15-0-1	
				1	2101-2350 / 1890 / 4	10	6-32008-19-0-1	
					Locking plates Se	100	(acc. to profile)	

SRH / SRW	401-750	751-1200	1201-1450	1451-1600
451- 720	5	7	8	9
721-1350	6	8	9	10
1351-1600	8	10	11	12
1601-2100	9	11	12	13
2101-2350	11	13	14	15

[1] * = Colour: 11 = F 1/EV 1, 22 = F 2/EV 2, 5 = dark brown (RAL 8022), 7 = white (RAL 9016)
[3] Extension 500 to be shortened to 250 mm
[5] From SRH 851 mm

Fixed gear position, groove position 9 and 13 mm

WK 2

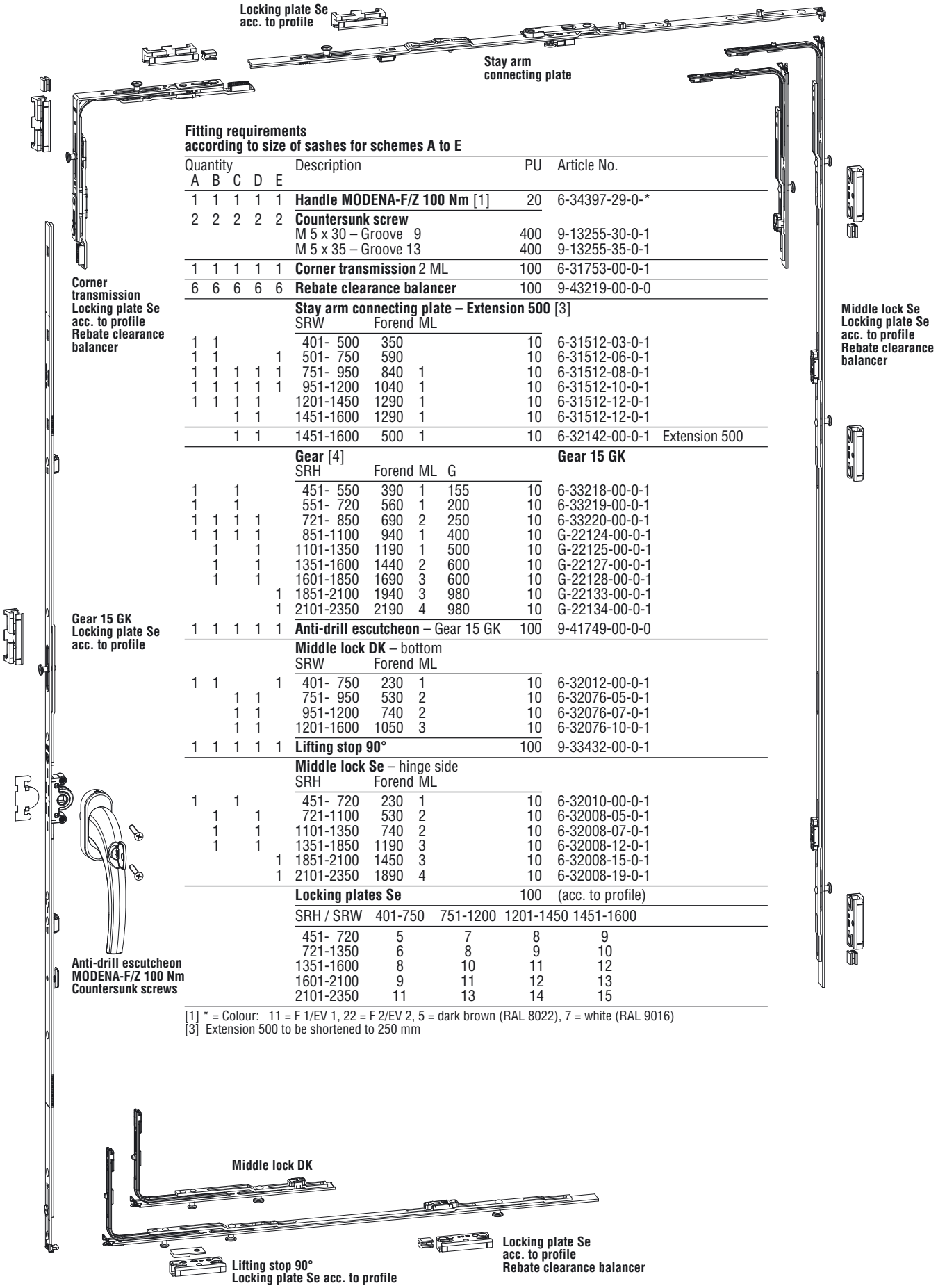

Fitting requirements according to size of sashes for schemes A to E

Quantity A	B	C	D	E	Description	PU	Article No.	
1	1	1	1	1	**Handle MODENA-F/Z 100 Nm** [1]	20	6-34397-29-0-*	
2	2	2	2	2	**Countersunk screw**			
					M 5 x 30 – Groove 9	400	9-13255-30-0-1	
					M 5 x 35 – Groove 13	400	9-13255-35-0-1	
1	1	1	1	1	**Corner transmission** 2 ML	100	6-31753-00-0-1	
6	6	6	6	6	**Rebate clearance balancer**	100	9-43219-00-0-0	
					Stay arm connecting plate – Extension 500 [3]			
					SRW Forend ML			
1	1				401- 500 350	10	6-31512-03-0-1	
1	1			1	501- 750 590	10	6-31512-06-0-1	
1	1	1	1	1	751- 950 840 1	10	6-31512-08-0-1	
1	1	1	1	1	951-1200 1040 1	10	6-31512-10-0-1	
1	1	1	1		1201-1450 1290 1	10	6-31512-12-0-1	
		1	1		1451-1600 1290 1	10	6-31512-12-0-1	
		1	1		1451-1600 500 1	10	6-32142-00-0-1	Extension 500
					Gear [4]		**Gear 15 GK**	
					SRH Forend ML G			
1		1			451- 550 390 1 155	10	6-33218-00-0-1	
1		1			551- 720 560 1 200	10	6-33219-00-0-1	
1	1	1	1		721- 850 690 2 250	10	6-33220-00-0-1	
1	1	1	1		851-1100 940 1 400	10	G-22124-00-0-1	
	1		1		1101-1350 1190 1 500	10	G-22125-00-0-1	
	1		1		1351-1600 1440 2 600	10	G-22127-00-0-1	
	1		1		1601-1850 1690 3 600	10	G-22128-00-0-1	
				1	1851-2100 1940 3 980	10	G-22133-00-0-1	
				1	2101-2350 2190 4 980	10	G-22134-00-0-1	
1	1	1	1	1	**Anti-drill escutcheon** – Gear 15 GK	100	9-41749-00-0-0	
					Middle lock DK – bottom			
					SRW Forend ML			
1	1			1	401- 750 230 1	10	6-32012-00-0-1	
		1	1		751- 950 530 2	10	6-32076-05-0-1	
		1	1		951-1200 740 2	10	6-32076-07-0-1	
		1	1		1201-1600 1050 3	10	6-32076-10-0-1	
1	1	1	1	1	**Lifting stop 90°**	100	9-33432-00-0-1	
					Middle lock Se – hinge side			
					SRH Forend ML			
1		1			451- 720 230 1	10	6-32010-00-0-1	
	1		1		721-1100 530 2	10	6-32008-05-0-1	
	1		1		1101-1350 740 2	10	6-32008-07-0-1	
	1		1		1351-1850 1190 3	10	6-32008-12-0-1	
				1	1851-2100 1450 3	10	6-32008-15-0-1	
				1	2101-2350 1890 4	10	6-32008-19-0-1	
					Locking plates Se	100	(acc. to profile)	

SRH / SRW	401-750	751-1200	1201-1450	1451-1600
451- 720	5	7	8	9
721-1350	6	8	9	10
1351-1600	8	10	11	12
1601-2100	9	11	12	13
2101-2350	11	13	14	15

[1] * = Colour: 11 = F 1/EV 1, 22 = F 2/EV 2, 5 = dark brown (RAL 8022), 7 = white (RAL 9016)
[3] Extension 500 to be shortened to 250 mm

Fixed gear position, groove position 9 and 13 mm

WK 2

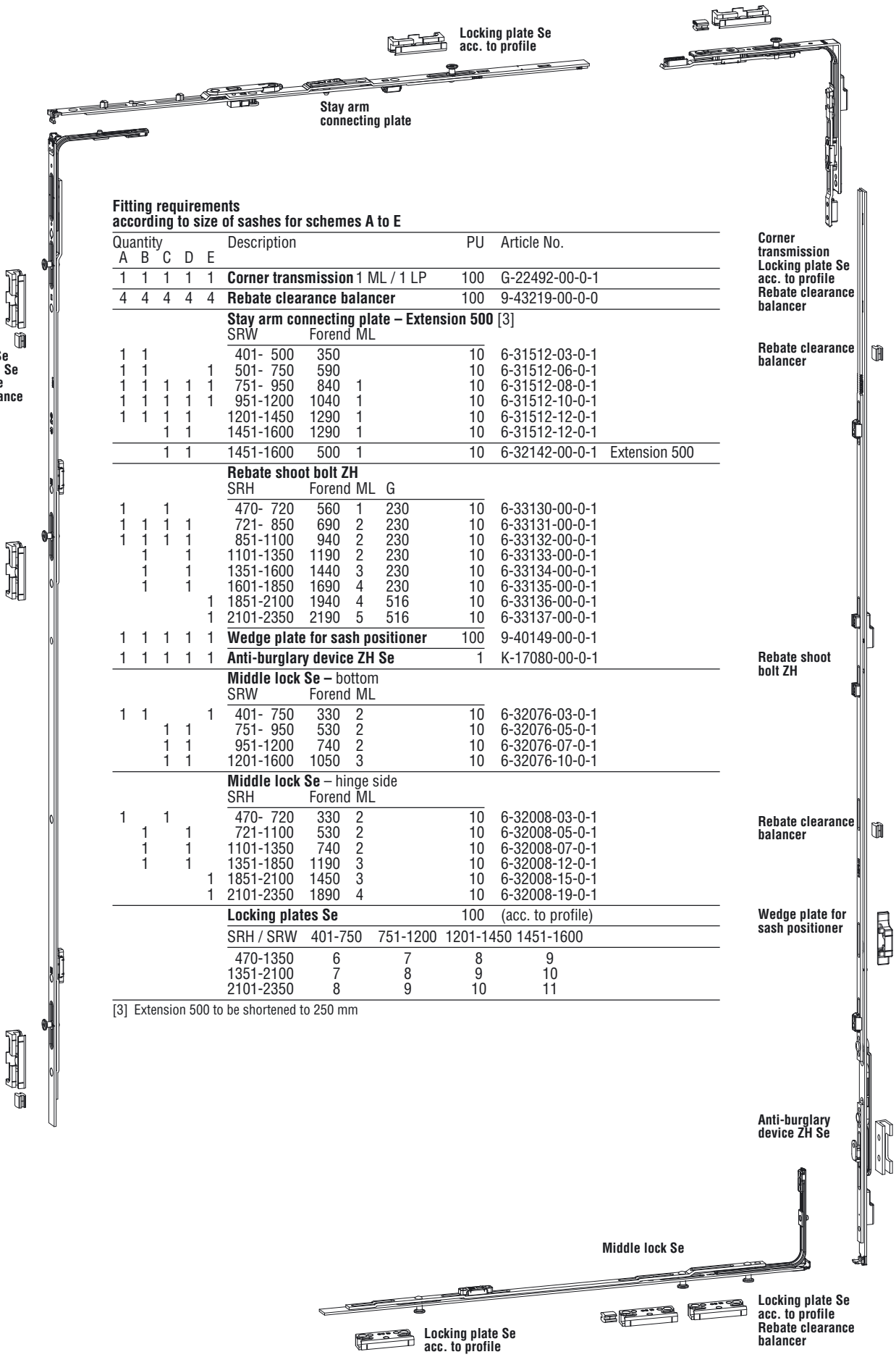

Fitting requirements according to size of sashes for schemes A to E

Quantity A	B	C	D	E	Description					PU	Article No.	
1	1	1	1	1	**Corner transmission** 1 ML / 1 LP					100	G-22492-00-0-1	
4	4	4	4	4	**Rebate clearance balancer**					100	9-43219-00-0-0	
					Stay arm connecting plate – Extension 500 [3]							
					SRW	Forend	ML					
1	1				401- 500	350				10	6-31512-03-0-1	
1	1			1	501- 750	590				10	6-31512-06-0-1	
1	1	1	1	1	751- 950	840	1			10	6-31512-08-0-1	
1	1	1	1	1	951-1200	1040	1			10	6-31512-10-0-1	
1	1	1	1		1201-1450	1290	1			10	6-31512-12-0-1	
		1	1		1451-1600	1290	1			10	6-31512-12-0-1	
		1	1		1451-1600	500	1			10	6-32142-00-0-1	Extension 500
					Rebate shoot bolt ZH							
					SRH	Forend	ML	G				
1		1			470- 720	560	1	230		10	6-33130-00-0-1	
1	1	1	1		721- 850	690	2	230		10	6-33131-00-0-1	
1	1	1	1		851-1100	940	2	230		10	6-33132-00-0-1	
	1		1		1101-1350	1190	2	230		10	6-33133-00-0-1	
	1		1		1351-1600	1440	3	230		10	6-33134-00-0-1	
	1		1		1601-1850	1690	4	230		10	6-33135-00-0-1	
				1	1851-2100	1940	4	516		10	6-33136-00-0-1	
				1	2101-2350	2190	5	516		10	6-33137-00-0-1	
1	1	1	1	1	**Wedge plate for sash positioner**					100	9-40149-00-0-1	
1	1	1	1	1	**Anti-burglary device ZH Se**					1	K-17080-00-0-1	
					Middle lock Se – bottom							
					SRW	Forend	ML					
1	1			1	401- 750	330	2			10	6-32076-03-0-1	
		1	1		751- 950	530	2			10	6-32076-05-0-1	
		1	1		951-1200	740	2			10	6-32076-07-0-1	
		1	1		1201-1600	1050	3			10	6-32076-10-0-1	
					Middle lock Se – hinge side							
					SRH	Forend	ML					
1		1			470- 720	330	2			10	6-32008-03-0-1	
	1		1		721-1100	530	2			10	6-32008-05-0-1	
	1		1		1101-1350	740	2			10	6-32008-07-0-1	
	1		1		1351-1850	1190	3			10	6-32008-12-0-1	
				1	1851-2100	1450	3			10	6-32008-15-0-1	
				1	2101-2350	1890	4			10	6-32008-19-0-1	
					Locking plates Se					100	(acc. to profile)	
					SRH / SRW	401-750	751-1200	1201-1450	1451-1600			
					470-1350	6	7	8	9			
					1351-2100	7	8	9	10			
					2101-2350	8	9	10	11			

[3] Extension 500 to be shortened to 250 mm

Fixed gear position, groove position 9 and 13 mm

WK 2

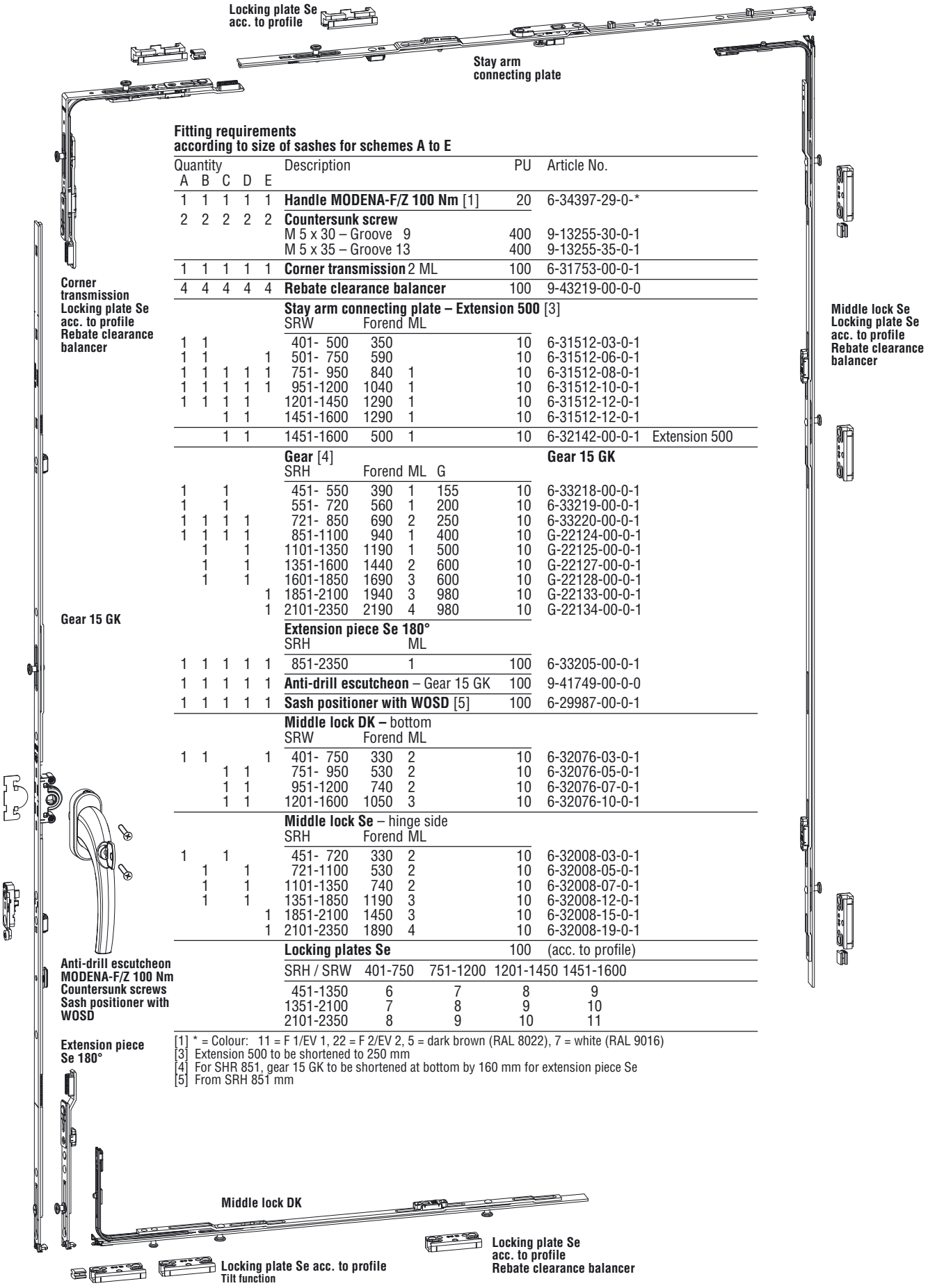

Fitting requirements according to size of sashes for schemes A to E

Quantity A	B	C	D	E	Description	PU	Article No.	
1	1	1	1	1	**Handle MODENA-F/Z 100 Nm** [1]	20	6-34397-29-0-*	
2	2	2	2	2	**Countersunk screw**			
					M 5 x 30 – Groove 9	400	9-13255-30-0-1	
					M 5 x 35 – Groove 13	400	9-13255-35-0-1	
1	1	1	1	1	**Corner transmission** 2 ML	100	6-31753-00-0-1	
4	4	4	4	4	**Rebate clearance balancer**	100	9-43219-00-0-0	
					Stay arm connecting plate – Extension 500 [3]			
					SRW / Forend / ML			
1	1				401- 500 / 350	10	6-31512-03-0-1	
1	1			1	501- 750 / 590	10	6-31512-06-0-1	
1	1	1	1	1	751- 950 / 840 / 1	10	6-31512-08-0-1	
1	1	1	1	1	951-1200 / 1040 / 1	10	6-31512-10-0-1	
1	1	1	1		1201-1450 / 1290 / 1	10	6-31512-12-0-1	
		1	1		1451-1600 / 1290 / 1	10	6-31512-12-0-1	
		1	1		1451-1600 / 500 / 1	10	6-32142-00-0-1	Extension 500
					Gear [4]		**Gear 15 GK**	
					SRH / Forend / ML / G			
1		1			451- 550 / 390 / 1 / 155	10	6-33218-00-0-1	
1		1			551- 720 / 560 / 1 / 200	10	6-33219-00-0-1	
1	1	1	1		721- 850 / 690 / 2 / 250	10	6-33220-00-0-1	
1	1	1	1		851-1100 / 940 / 1 / 400	10	G-22124-00-0-1	
	1		1		1101-1350 / 1190 / 1 / 500	10	G-22125-00-0-1	
	1		1		1351-1600 / 1440 / 2 / 600	10	G-22127-00-0-1	
	1		1		1601-1850 / 1690 / 3 / 600	10	G-22128-00-0-1	
				1	1851-2100 / 1940 / 3 / 980	10	G-22133-00-0-1	
				1	2101-2350 / 2190 / 4 / 980	10	G-22134-00-0-1	
					Extension piece Se 180°			
					SRH / ML			
1	1	1	1	1	851-2350 / 1	100	6-33205-00-0-1	
1	1	1	1	1	**Anti-drill escutcheon** – Gear 15 GK	100	9-41749-00-0-0	
1	1	1	1	1	**Sash positioner with WOSD** [5]	100	6-29987-00-0-1	
					Middle lock DK – bottom			
					SRW / Forend / ML			
1	1			1	401- 750 / 330 / 2	10	6-32076-03-0-1	
		1	1		751- 950 / 530 / 2	10	6-32076-05-0-1	
		1	1		951-1200 / 740 / 2	10	6-32076-07-0-1	
		1	1		1201-1600 / 1050 / 3	10	6-32076-10-0-1	
					Middle lock Se – hinge side			
					SRH / Forend / ML			
1		1			451- 720 / 330 / 2	10	6-32008-03-0-1	
	1		1		721-1100 / 530 / 2	10	6-32008-05-0-1	
	1		1		1101-1350 / 740 / 2	10	6-32008-07-0-1	
	1		1		1351-1850 / 1190 / 3	10	6-32008-12-0-1	
				1	1851-2100 / 1450 / 3	10	6-32008-15-0-1	
				1	2101-2350 / 1890 / 4	10	6-32008-19-0-1	
					Locking plates Se	100	(acc. to profile)	

SRH / SRW	401-750	751-1200	1201-1450	1451-1600
451-1350	6	7	8	9
1351-2100	7	8	9	10
2101-2350	8	9	10	11

[1] * = Colour: 11 = F 1/EV 1, 22 = F 2/EV 2, 5 = dark brown (RAL 8022), 7 = white (RAL 9016)
[3] Extension 500 to be shortened to 250 mm
[4] For SHR 851, gear 15 GK to be shortened at bottom by 160 mm for extension piece Se
[5] From SRH 851 mm

Fixed gear position, groove position 9 and 13 mm

WK 2

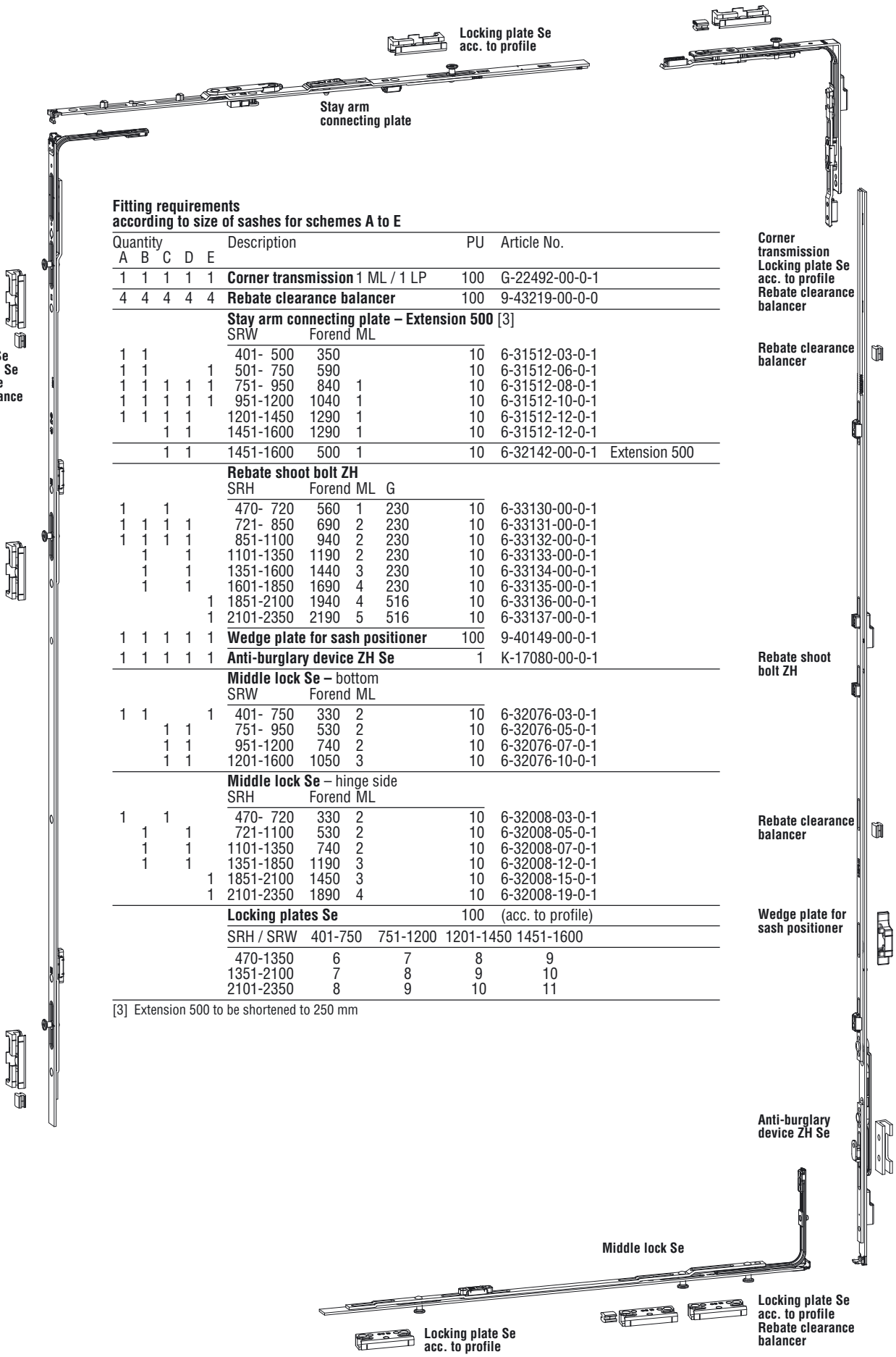

Fitting requirements according to size of sashes for schemes A to E

Quantity A	B	C	D	E	Description				PU	Article No.	
1	1	1	1	1	**Corner transmission** 1 ML / 1 LP				100	G-22492-00-0-1	
4	4	4	4	4	**Rebate clearance balancer**				100	9-43219-00-0-0	
					Stay arm connecting plate – Extension 500 [3]						
					SRW	Forend	ML				
1	1				401- 500	350			10	6-31512-03-0-1	
1	1			1	501- 750	590			10	6-31512-06-0-1	
1	1	1	1	1	751- 950	840	1		10	6-31512-08-0-1	
1	1	1	1	1	951-1200	1040	1		10	6-31512-10-0-1	
1	1	1	1		1201-1450	1290	1		10	6-31512-12-0-1	
		1	1		1451-1600	1290	1		10	6-31512-12-0-1	
		1	1		1451-1600	500	1		10	6-32142-00-0-1	Extension 500
					Rebate shoot bolt ZH						
					SRH	Forend	ML	G			
1		1			470- 720	560	1	230	10	6-33130-00-0-1	
1	1	1	1		721- 850	690	2	230	10	6-33131-00-0-1	
1	1	1	1		851-1100	940	2	230	10	6-33132-00-0-1	
	1		1		1101-1350	1190	2	230	10	6-33133-00-0-1	
	1		1		1351-1600	1440	3	230	10	6-33134-00-0-1	
	1		1		1601-1850	1690	4	230	10	6-33135-00-0-1	
				1	1851-2100	1940	4	516	10	6-33136-00-0-1	
				1	2101-2350	2190	5	516	10	6-33137-00-0-1	
1	1	1	1	1	**Wedge plate for sash positioner**				100	9-40149-00-0-1	
1	1	1	1	1	**Anti-burglary device ZH Se**				1	K-17080-00-0-1	
					Middle lock Se – bottom						
					SRW	Forend	ML				
1	1			1	401- 750	330	2		10	6-32076-03-0-1	
		1	1		751- 950	530	2		10	6-32076-05-0-1	
		1	1		951-1200	740	2		10	6-32076-07-0-1	
		1	1		1201-1600	1050	3		10	6-32076-10-0-1	
					Middle lock Se – hinge side						
					SRH	Forend	ML				
1		1			470- 720	330	2		10	6-32008-03-0-1	
	1		1		721-1100	530	2		10	6-32008-05-0-1	
	1		1		1101-1350	740	2		10	6-32008-07-0-1	
	1		1		1351-1850	1190	3		10	6-32008-12-0-1	
				1	1851-2100	1450	3		10	6-32008-15-0-1	
				1	2101-2350	1890	4		10	6-32008-19-0-1	
					Locking plates Se				100	(acc. to profile)	

SRH / SRW	401-750	751-1200	1201-1450	1451-1600
470-1350	6	7	8	9
1351-2100	7	8	9	10
2101-2350	8	9	10	11

[3] Extension 500 to be shortened to 250 mm

Fixed gear position, groove position 9 and 13 mm

WK 2

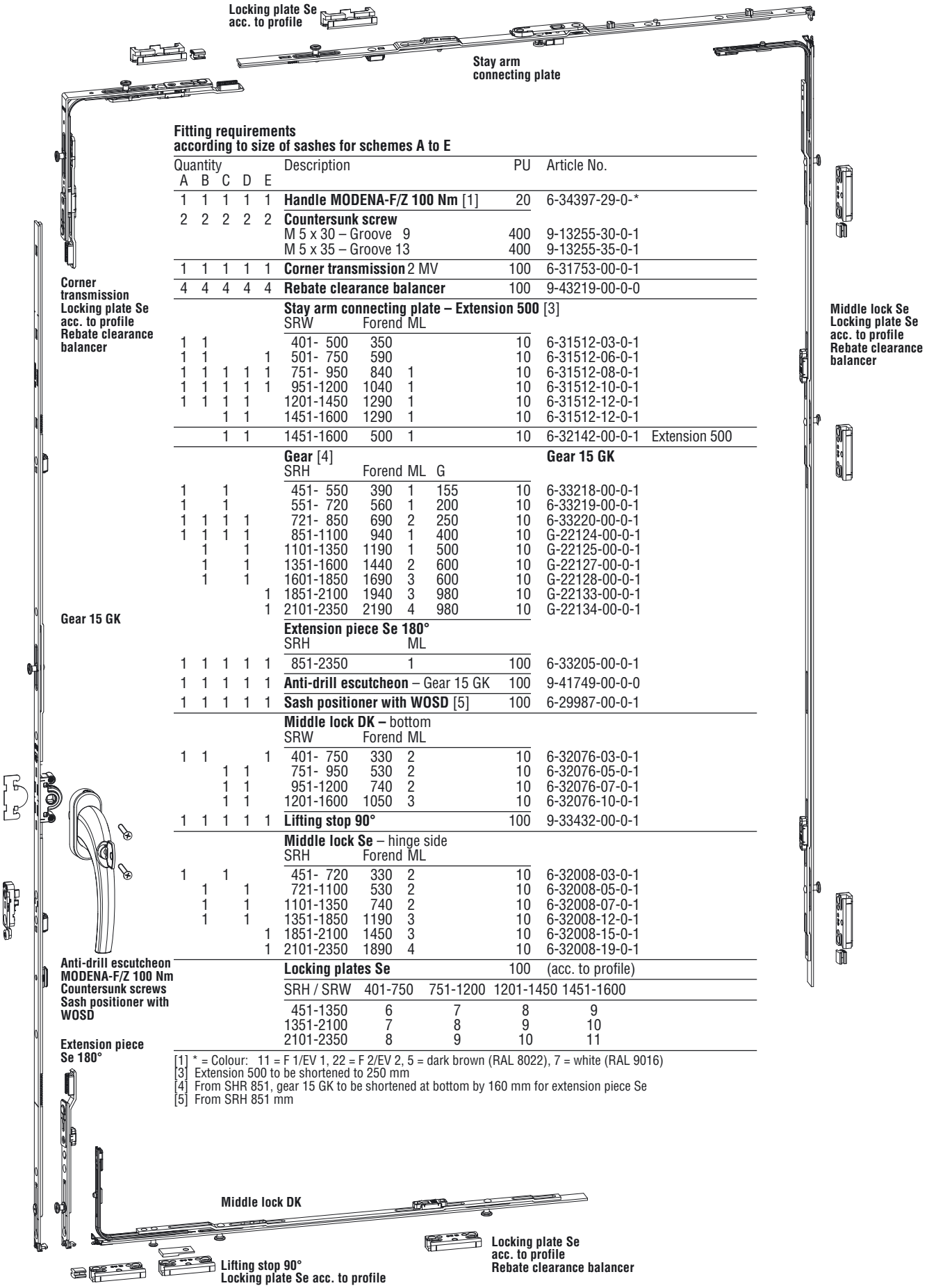

Fitting requirements
according to size of sashes for schemes A to E

Quantity A	B	C	D	E	Description				PU	Article No.	
1	1	1	1	1	**Handle MODENA-F/Z 100 Nm** [1]				20	6-34397-29-0-*	
2	2	2	2	2	**Countersunk screw**						
					M 5 x 30 – Groove 9				400	9-13255-30-0-1	
					M 5 x 35 – Groove 13				400	9-13255-35-0-1	
1	1	1	1	1	**Corner transmission** 2 MV				100	6-31753-00-0-1	
4	4	4	4	4	**Rebate clearance balancer**				100	9-43219-00-0-0	
					Stay arm connecting plate – Extension 500 [3]						
					SRW	Forend	ML				
1	1				401- 500	350			10	6-31512-03-0-1	
1	1			1	501- 750	590			10	6-31512-06-0-1	
1	1	1	1	1	751- 950	840	1		10	6-31512-08-0-1	
1	1	1	1	1	951-1200	1040	1		10	6-31512-10-0-1	
1	1	1	1		1201-1450	1290	1		10	6-31512-12-0-1	
		1	1		1451-1600	1290	1		10	6-31512-12-0-1	
		1	1		1451-1600	500	1		10	6-32142-00-0-1	Extension 500
					Gear [4]					**Gear 15 GK**	
					SRH	Forend	ML	G			
1		1			451- 550	390	1	155	10	6-33218-00-0-1	
1		1			551- 720	560	1	200	10	6-33219-00-0-1	
1	1	1	1		721- 850	690	2	250	10	6-33220-00-0-1	
1	1	1	1		851-1100	940	1	400	10	G-22124-00-0-1	
	1		1		1101-1350	1190	1	500	10	G-22125-00-0-1	
	1		1		1351-1600	1440	2	600	10	G-22127-00-0-1	
	1		1		1601-1850	1690	3	600	10	G-22128-00-0-1	
				1	1851-2100	1940	3	980	10	G-22133-00-0-1	
				1	2101-2350	2190	4	980	10	G-22134-00-0-1	
					Extension piece Se 180°						
					SRH		ML				
1	1	1	1	1	851-2350		1		100	6-33205-00-0-1	
1	1	1	1	1	**Anti-drill escutcheon** – Gear 15 GK				100	9-41749-00-0-0	
1	1	1	1	1	**Sash positioner with WOSD** [5]				100	6-29987-00-0-1	
					Middle lock DK – bottom						
					SRW	Forend	ML				
1	1			1	401- 750	330	2		10	6-32076-03-0-1	
		1	1		751- 950	530	2		10	6-32076-05-0-1	
		1	1		951-1200	740	2		10	6-32076-07-0-1	
		1	1		1201-1600	1050	3		10	6-32076-10-0-1	
1	1	1	1	1	**Lifting stop 90°**				100	9-33432-00-0-1	
					Middle lock Se – hinge side						
					SRH	Forend	ML				
1		1			451- 720	330	2		10	6-32008-03-0-1	
	1		1		721-1100	530	2		10	6-32008-05-0-1	
	1		1		1101-1350	740	2		10	6-32008-07-0-1	
	1		1		1351-1850	1190	3		10	6-32008-12-0-1	
				1	1851-2100	1450	3		10	6-32008-15-0-1	
				1	2101-2350	1890	4		10	6-32008-19-0-1	

Locking plates Se 100 (acc. to profile)

SRH / SRW	401-750	751-1200	1201-1450	1451-1600
451-1350	6	7	8	9
1351-2100	7	8	9	10
2101-2350	8	9	10	11

[1] * = Colour: 11 = F 1/EV 1, 22 = F 2/EV 2, 5 = dark brown (RAL 8022), 7 = white (RAL 9016)
[3] Extension 500 to be shortened to 250 mm
[4] From SHR 851, gear 15 GK to be shortened at bottom by 160 mm for extension piece Se
[5] From SRH 851 mm

Variable gear position, groove position 9 and 13 mm

Basic security

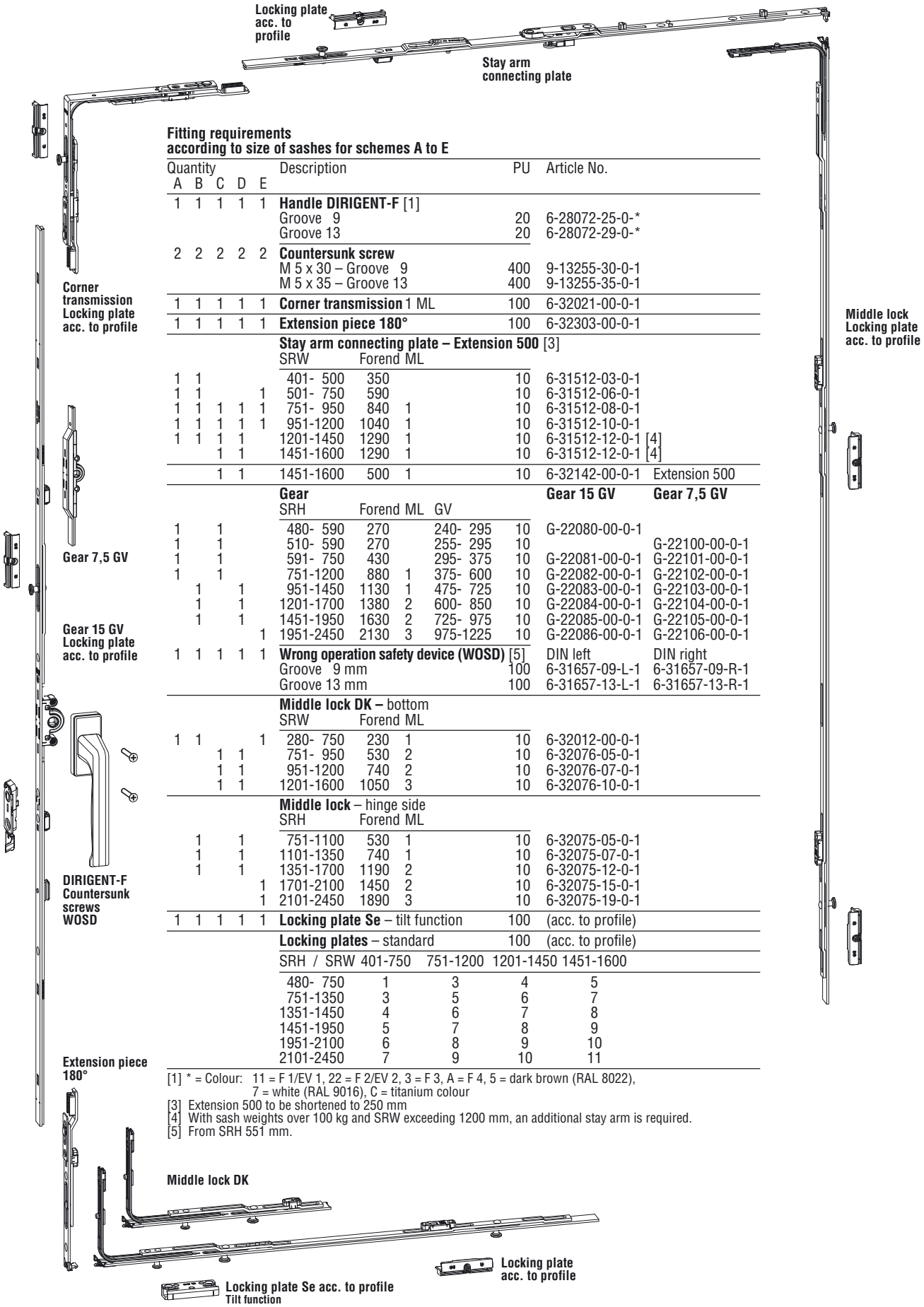

Fitting requirements according to size of sashes for schemes A to E

Quantity A	B	C	D	E	Description	PU	Article No.	
1	1	1	1	1	**Handle DIRIGENT-F** [1]			
					Groove 9	20	6-28072-25-0-*	
					Groove 13	20	6-28072-29-0-*	
2	2	2	2	2	**Countersunk screw**			
					M 5 x 30 – Groove 9	400	9-13255-30-0-1	
					M 5 x 35 – Groove 13	400	9-13255-35-0-1	
1	1	1	1	1	**Corner transmission** 1 ML	100	6-32021-00-0-1	
1	1	1	1	1	**Extension piece 180°**	100	6-32303-00-0-1	
					Stay arm connecting plate – Extension 500 [3]			
					SRW Forend ML			
1	1				401- 500 350	10	6-31512-03-0-1	
1	1			1	501- 750 590	10	6-31512-06-0-1	
1	1	1	1	1	751- 950 840 1	10	6-31512-08-0-1	
1	1	1	1	1	951-1200 1040 1	10	6-31512-10-0-1	
1	1	1	1		1201-1450 1290 1	10	6-31512-12-0-1 [4]	
		1	1		1451-1600 1290 1	10	6-31512-12-0-1 [4]	
		1	1		1451-1600 500 1	10	6-32142-00-0-1	Extension 500
					Gear		**Gear 15 GV**	**Gear 7,5 GV**
					SRH Forend ML GV			
1		1			480- 590 270 240- 295	10	G-22080-00-0-1	
1		1			510- 590 270 255- 295	10		G-22100-00-0-1
1		1			591- 750 430 295- 375	10	G-22081-00-0-1	G-22101-00-0-1
1		1			751-1200 880 1 375- 600	10	G-22082-00-0-1	G-22102-00-0-1
	1		1		951-1450 1130 1 475- 725	10	G-22083-00-0-1	G-22103-00-0-1
	1		1		1201-1700 1380 2 600- 850	10	G-22084-00-0-1	G-22104-00-0-1
	1		1		1451-1950 1630 2 725- 975	10	G-22085-00-0-1	G-22105-00-0-1
				1	1951-2450 2130 3 975-1225	10	G-22086-00-0-1	G-22106-00-0-1
1	1	1	1	1	**Wrong operation safety device (WOSD)** [5]		DIN left	DIN right
					Groove 9 mm	100	6-31657-09-L-1	6-31657-09-R-1
					Groove 13 mm	100	6-31657-13-L-1	6-31657-13-R-1
					Middle lock DK – bottom			
					SRW Forend ML			
1	1			1	280- 750 230 1	10	6-32012-00-0-1	
		1	1		751- 950 530 2	10	6-32076-05-0-1	
		1	1		951-1200 740 2	10	6-32076-07-0-1	
		1	1		1201-1600 1050 3	10	6-32076-10-0-1	
					Middle lock – hinge side			
					SRH Forend ML			
	1		1		751-1100 530 1	10	6-32075-05-0-1	
	1		1		1101-1350 740 1	10	6-32075-07-0-1	
	1		1		1351-1700 1190 2	10	6-32075-12-0-1	
				1	1701-2100 1450 2	10	6-32075-15-0-1	
				1	2101-2450 1890 3	10	6-32075-19-0-1	
1	1	1	1	1	**Locking plate Se** – tilt function	100	(acc. to profile)	
					Locking plates – standard	100	(acc. to profile)	

SRH / SRW	401-750	751-1200	1201-1450	1451-1600
480- 750	1	3	4	5
751-1350	3	5	6	7
1351-1450	4	6	7	8
1451-1950	5	7	8	9
1951-2100	6	8	9	10
2101-2450	7	9	10	11

[1] * = Colour: 11 = F 1/EV 1, 22 = F 2/EV 2, 3 = F 3, A = F 4, 5 = dark brown (RAL 8022), 7 = white (RAL 9016), C = titanium colour
[3] Extension 500 to be shortened to 250 mm
[4] With sash weights over 100 kg and SRW exceeding 1200 mm, an additional stay arm is required.
[5] From SRH 551 mm.

Variable gear position, groove position 9 and 13 mm

Basic security

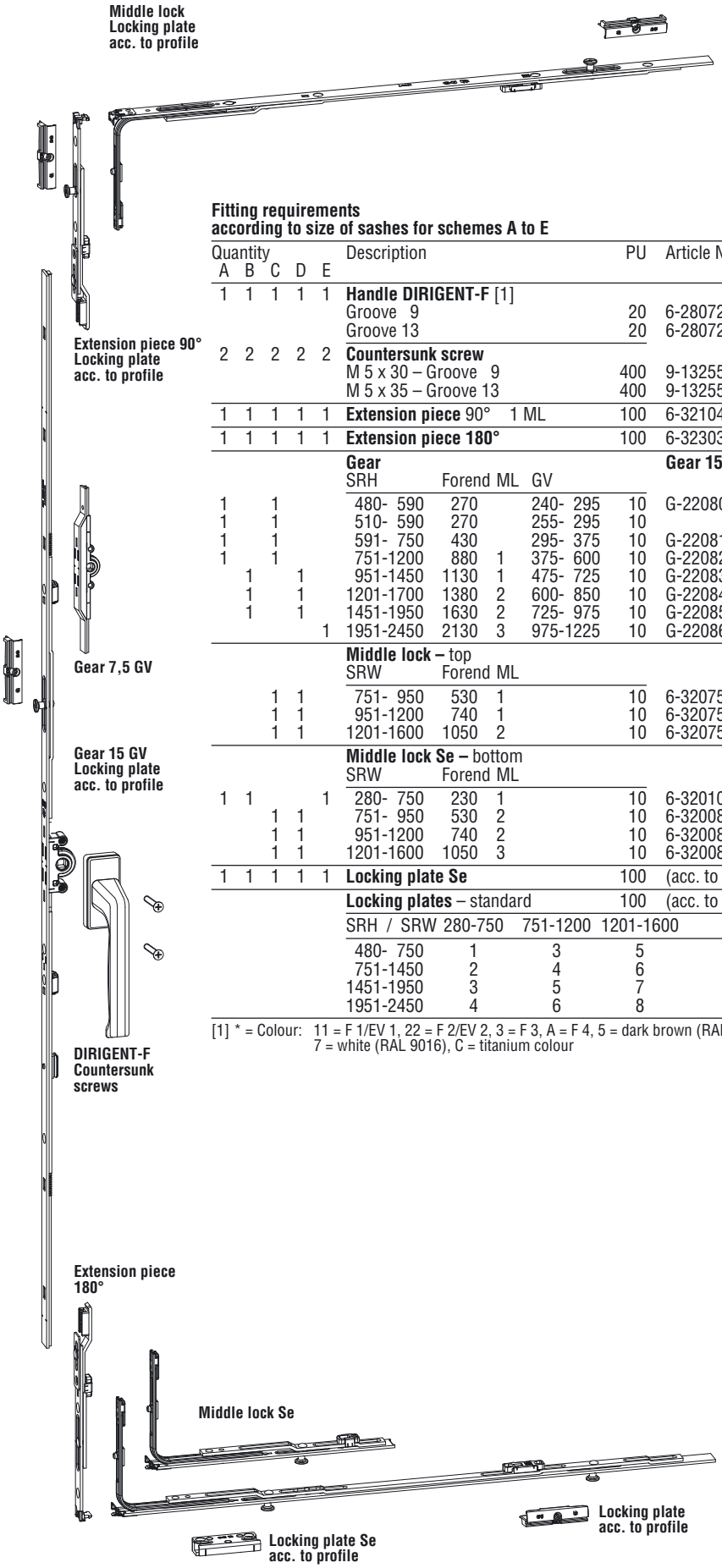

Fitting requirements according to size of sashes for schemes A to E

Quantity A	B	C	D	E	Description				PU	Article No.	
1	1	1	1	1	**Handle DIRIGENT-F** [1]						
					Groove 9				20	6-28072-25-0-*	
					Groove 13				20	6-28072-29-0-*	
2	2	2	2	2	**Countersunk screw**						
					M 5 x 30 – Groove 9				400	9-13255-30-0-1	
					M 5 x 35 – Groove 13				400	9-13255-35-0-1	
1	1	1	1	1	**Extension piece** 90° 1 ML				100	6-32104-00-0-1	
1	1	1	1	1	**Extension piece 180°**				100	6-32303-00-0-1	
					Gear					**Gear 15 GV**	**Gear 7,5 GV**
					SRH	Forend	ML	GV			
1		1			480- 590	270		240- 295	10	G-22080-00-0-1	
1		1			510- 590	270		255- 295	10		G-22100-00-0-1
1		1			591- 750	430		295- 375	10	G-22081-00-0-1	G-22101-00-0-1
1		1			751-1200	880	1	375- 600	10	G-22082-00-0-1	G-22102-00-0-1
	1		1		951-1450	1130	1	475- 725	10	G-22083-00-0-1	G-22103-00-0-1
	1		1		1201-1700	1380	2	600- 850	10	G-22084-00-0-1	G-22104-00-0-1
	1		1		1451-1950	1630	2	725- 975	10	G-22085-00-0-1	G-22105-00-0-1
				1	1951-2450	2130	3	975-1225	10	G-22086-00-0-1	G-22106-00-0-1
					Middle lock – top						
					SRW	Forend	ML				
		1	1		751- 950	530	1		10	6-32075-05-0-1	
		1	1		951-1200	740	1		10	6-32075-07-0-1	
		1	1		1201-1600	1050	2		10	6-32075-10-0-1	
					Middle lock Se – bottom						
					SRW	Forend	ML				
1	1			1	280- 750	230	1		10	6-32010-00-0-1	
		1	1		751- 950	530	2		10	6-32008-05-0-1	
		1	1		951-1200	740	2		10	6-32008-07-0-1	
		1	1		1201-1600	1050	3		10	6-32008-10-0-1	
1	1	1	1	1	**Locking plate Se**				100	(acc. to profile)	
					Locking plates – standard				100	(acc. to profile)	

SRH / SRW	280-750	751-1200	1201-1600
480- 750	1	3	5
751-1450	2	4	6
1451-1950	3	5	7
1951-2450	4	6	8

[1] * = Colour: 11 = F 1/EV 1, 22 = F 2/EV 2, 3 = F 3, A = F 4, 5 = dark brown (RAL 8022), 7 = white (RAL 9016), C = titanium colour

Variable gear position, groove position 9 and 13 mm

Basic security

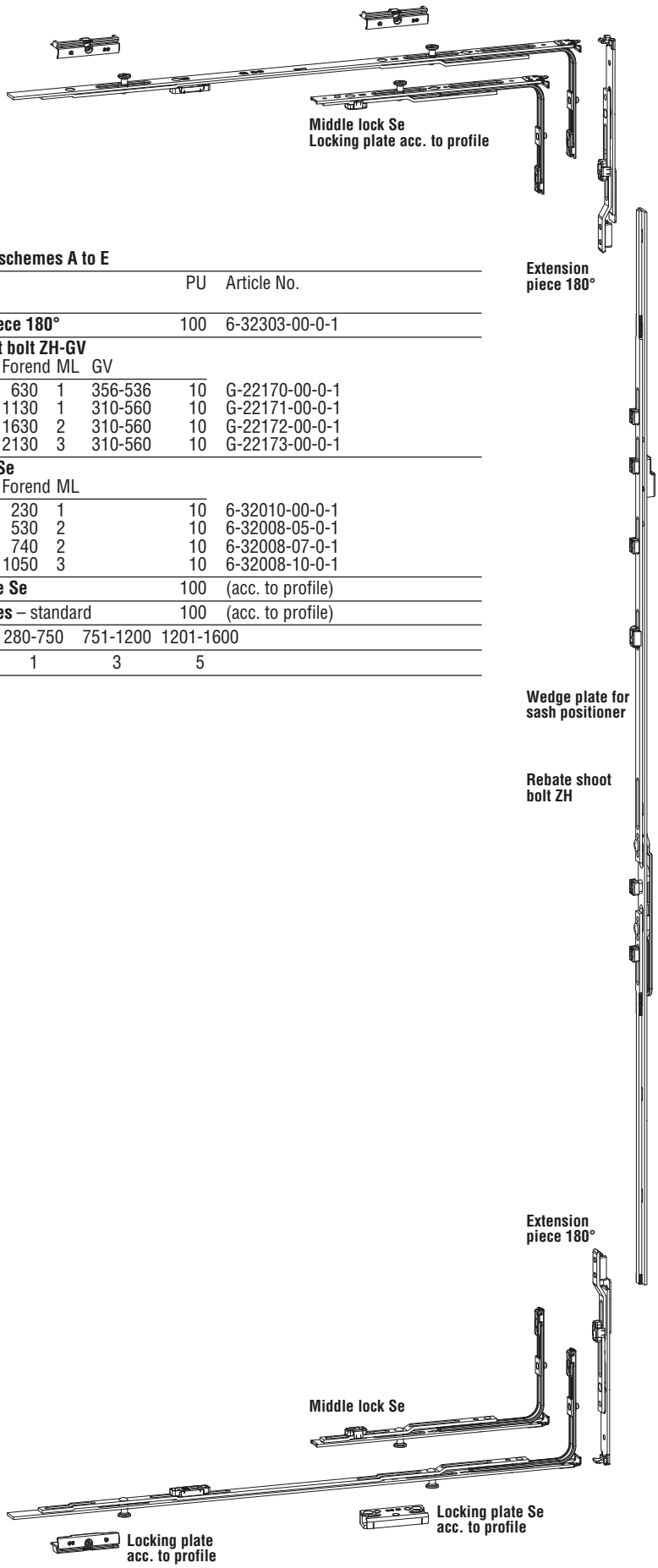

Fitting requirements according to size of sashes for schemes A to E

Quantity A	B	C	D	E	Description				PU	Article No.
2	2	2	2	2	**Extension piece 180°**				100	6-32303-00-0-1
					Rebate shoot bolt ZH-GV					
					SRH	Forend	ML	GV		
1		1			781- 950	630	1	356-536	10	G-22170-00-0-1
1	1	1	1		951-1450	1130	1	310-560	10	G-22171-00-0-1
1	1	1	1		1451-1950	1630	2	310-560	10	G-22172-00-0-1
	1		1		1951-2450	2130	3	310-560	10	G-22173-00-0-1
					Middle lock Se					
					SRW	Forend	ML			
2	2			2	280- 750	230	1		10	6-32010-00-0-1
		2	2		751- 950	530	2		10	6-32008-05-0-1
		2	2		951-1200	740	2		10	6-32008-07-0-1
		2	2		1201-1600	1050	3		10	6-32008-10-0-1
1	1	1	1	1	**Locking plate Se**				100	(acc. to profile)
					Locking plates – standard				100	(acc. to profile)
					SRH / SRW	280-750	751-1200	1201-1600		
					781-2450	1	3	5		

Variable gear position, groove position 9 and 13 mm

Basic security

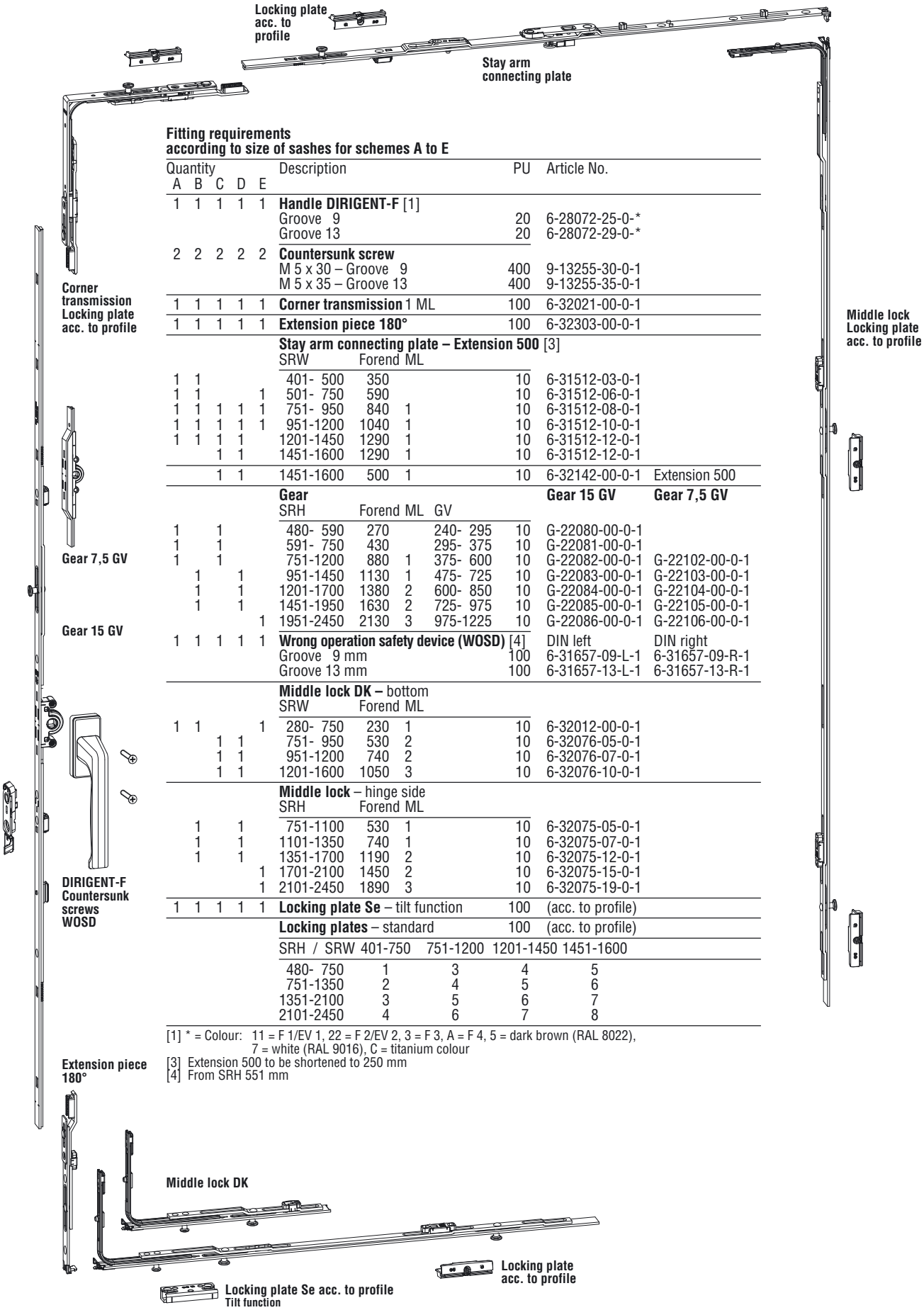

Fitting requirements according to size of sashes for schemes A to E

Quantity A	B	C	D	E	Description	PU	Article No.	
1	1	1	1	1	**Handle DIRIGENT-F** [1]			
					Groove 9	20	6-28072-25-0-*	
					Groove 13	20	6-28072-29-0-*	
2	2	2	2	2	**Countersunk screw**			
					M 5 x 30 – Groove 9	400	9-13255-30-0-1	
					M 5 x 35 – Groove 13	400	9-13255-35-0-1	
1	1	1	1	1	**Corner transmission** 1 ML	100	6-32021-00-0-1	
1	1	1	1	1	**Extension piece 180°**	100	6-32303-00-0-1	
					Stay arm connecting plate – Extension 500 [3]			
					SRW Forend ML			
1	1				401- 500 350	10	6-31512-03-0-1	
1	1			1	501- 750 590	10	6-31512-06-0-1	
1	1	1	1	1	751- 950 840 1	10	6-31512-08-0-1	
1	1	1	1	1	951-1200 1040 1	10	6-31512-10-0-1	
1	1	1	1		1201-1450 1290 1	10	6-31512-12-0-1	
		1	1		1451-1600 1290 1	10	6-31512-12-0-1	
		1	1		1451-1600 500 1	10	6-32142-00-0-1	Extension 500
					Gear		**Gear 15 GV**	**Gear 7,5 GV**
					SRH Forend ML GV			
1		1			480- 590 270 240- 295	10	G-22080-00-0-1	
1		1			591- 750 430 295- 375	10	G-22081-00-0-1	
1		1			751-1200 880 1 375- 600	10	G-22082-00-0-1	G-22102-00-0-1
	1		1		951-1450 1130 1 475- 725	10	G-22083-00-0-1	G-22103-00-0-1
	1		1		1201-1700 1380 2 600- 850	10	G-22084-00-0-1	G-22104-00-0-1
	1		1		1451-1950 1630 2 725- 975	10	G-22085-00-0-1	G-22105-00-0-1
				1	1951-2450 2130 3 975-1225	10	G-22086-00-0-1	G-22106-00-0-1
1	1	1	1	1	**Wrong operation safety device (WOSD)** [4]		DIN left	DIN right
					Groove 9 mm	100	6-31657-09-L-1	6-31657-09-R-1
					Groove 13 mm	100	6-31657-13-L-1	6-31657-13-R-1
					Middle lock DK – bottom			
					SRW Forend ML			
1	1			1	280- 750 230 1	10	6-32012-00-0-1	
		1	1		751- 950 530 2	10	6-32076-05-0-1	
		1	1		951-1200 740 2	10	6-32076-07-0-1	
		1	1		1201-1600 1050 3	10	6-32076-10-0-1	
					Middle lock – hinge side			
					SRH Forend ML			
	1		1		751-1100 530 1	10	6-32075-05-0-1	
	1		1		1101-1350 740 1	10	6-32075-07-0-1	
	1		1		1351-1700 1190 2	10	6-32075-12-0-1	
				1	1701-2100 1450 2	10	6-32075-15-0-1	
				1	2101-2450 1890 3	10	6-32075-19-0-1	
1	1	1	1	1	**Locking plate Se** – tilt function	100	(acc. to profile)	
					Locking plates – standard	100	(acc. to profile)	

SRH / SRW	401-750	751-1200	1201-1450	1451-1600
480- 750	1	3	4	5
751-1350	2	4	5	6
1351-2100	3	5	6	7
2101-2450	4	6	7	8

[1] * = Colour: 11 = F 1/EV 1, 22 = F 2/EV 2, 3 = F 3, A = F 4, 5 = dark brown (RAL 8022), 7 = white (RAL 9016), C = titanium colour
[3] Extension 500 to be shortened to 250 mm
[4] From SRH 551 mm

Variable gear position, groove position 9 and 13 mm

Basic security

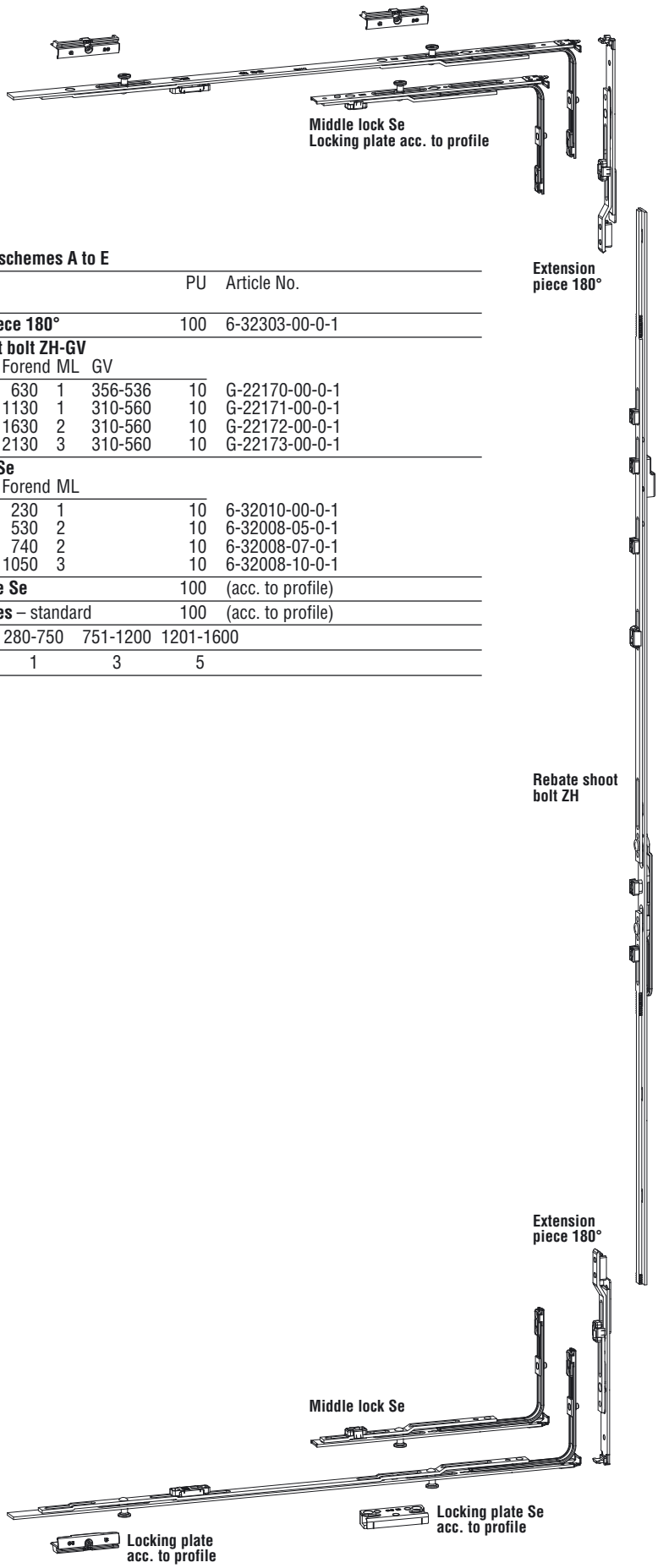

Fitting requirements according to size of sashes for schemes A to E

Quantity A	B	C	D	E	Description				PU	Article No.
2	2	2	2	2	**Extension piece 180°**				100	6-32303-00-0-1
					Rebate shoot bolt ZH-GV					
					SRH	Forend	ML	GV		
1		1			781- 950	630	1	356-536	10	G-22170-00-0-1
1	1	1	1		951-1450	1130	1	310-560	10	G-22171-00-0-1
1	1	1	1		1451-1950	1630	2	310-560	10	G-22172-00-0-1
	1		1		1951-2450	2130	3	310-560	10	G-22173-00-0-1
					Middle lock Se					
					SRW	Forend	ML			
2	2			2	280- 750	230	1		10	6-32010-00-0-1
		2	2		751- 950	530	2		10	6-32008-05-0-1
		2	2		951-1200	740	2		10	6-32008-07-0-1
		2	2		1201-1600	1050	3		10	6-32008-10-0-1
1	1	1	1	1	**Locking plate Se**				100	(acc. to profile)
					Locking plates – standard				100	(acc. to profile)
					SRH / SRW	280-750	751-1200	1201-1600		
					781-2450	1	3	5		

Variable gear position, groove position 9 and 13 mm

Basic security

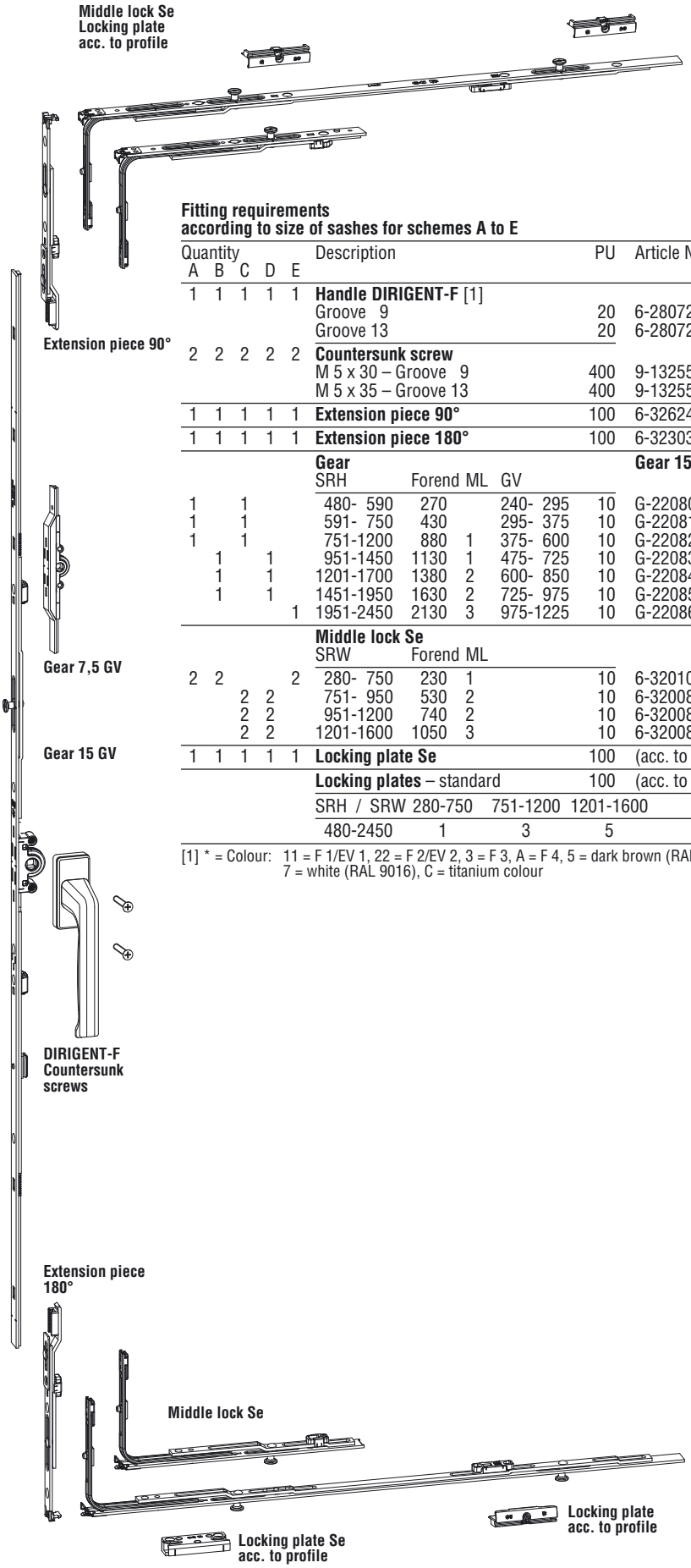

Fitting requirements according to size of sashes for schemes A to E

Quantity A	B	C	D	E	Description				PU	Article No.	
1	1	1	1	1	**Handle DIRIGENT-F** [1]						
					Groove 9				20	6-28072-25-0-*	
					Groove 13				20	6-28072-29-0-*	
2	2	2	2	2	**Countersunk screw**						
					M 5 x 30 – Groove 9				400	9-13255-30-0-1	
					M 5 x 35 – Groove 13				400	9-13255-35-0-1	
1	1	1	1	1	**Extension piece 90°**				100	6-32624-00-0-1	
1	1	1	1	1	**Extension piece 180°**				100	6-32303-00-0-1	
					Gear					**Gear 15 GV**	**Gear 7,5 GV**
					SRH	Forend	ML	GV			
1		1			480- 590	270		240- 295	10	G-22080-00-0-1	
1		1			591- 750	430		295- 375	10	G-22081-00-0-1	
1		1			751-1200	880	1	375- 600	10	G-22082-00-0-1	G-22102-00-0-1
	1		1		951-1450	1130	1	475- 725	10	G-22083-00-0-1	G-22103-00-0-1
	1		1		1201-1700	1380	2	600- 850	10	G-22084-00-0-1	G-22104-00-0-1
	1		1		1451-1950	1630	2	725- 975	10	G-22085-00-0-1	G-22105-00-0-1
				1	1951-2450	2130	3	975-1225	10	G-22086-00-0-1	G-22106-00-0-1
					Middle lock Se						
					SRW	Forend	ML				
2	2			2	280- 750	230	1		10	6-32010-00-0-1	
		2	2		751- 950	530	2		10	6-32008-05-0-1	
		2	2		951-1200	740	2		10	6-32008-07-0-1	
		2	2		1201-1600	1050	3		10	6-32008-10-0-1	
1	1	1	1	1	**Locking plate Se**				100	(acc. to profile)	
					Locking plates – standard				100	(acc. to profile)	

SRH / SRW	280-750	751-1200	1201-1600
480-2450	1	3	5

[1] * = Colour: 11 = F 1/EV 1, 22 = F 2/EV 2, 3 = F 3, A = F 4, 5 = dark brown (RAL 8022), 7 = white (RAL 9016), C = titanium colour

Variable gear position, groove position 9 and 13 mm

WK 2

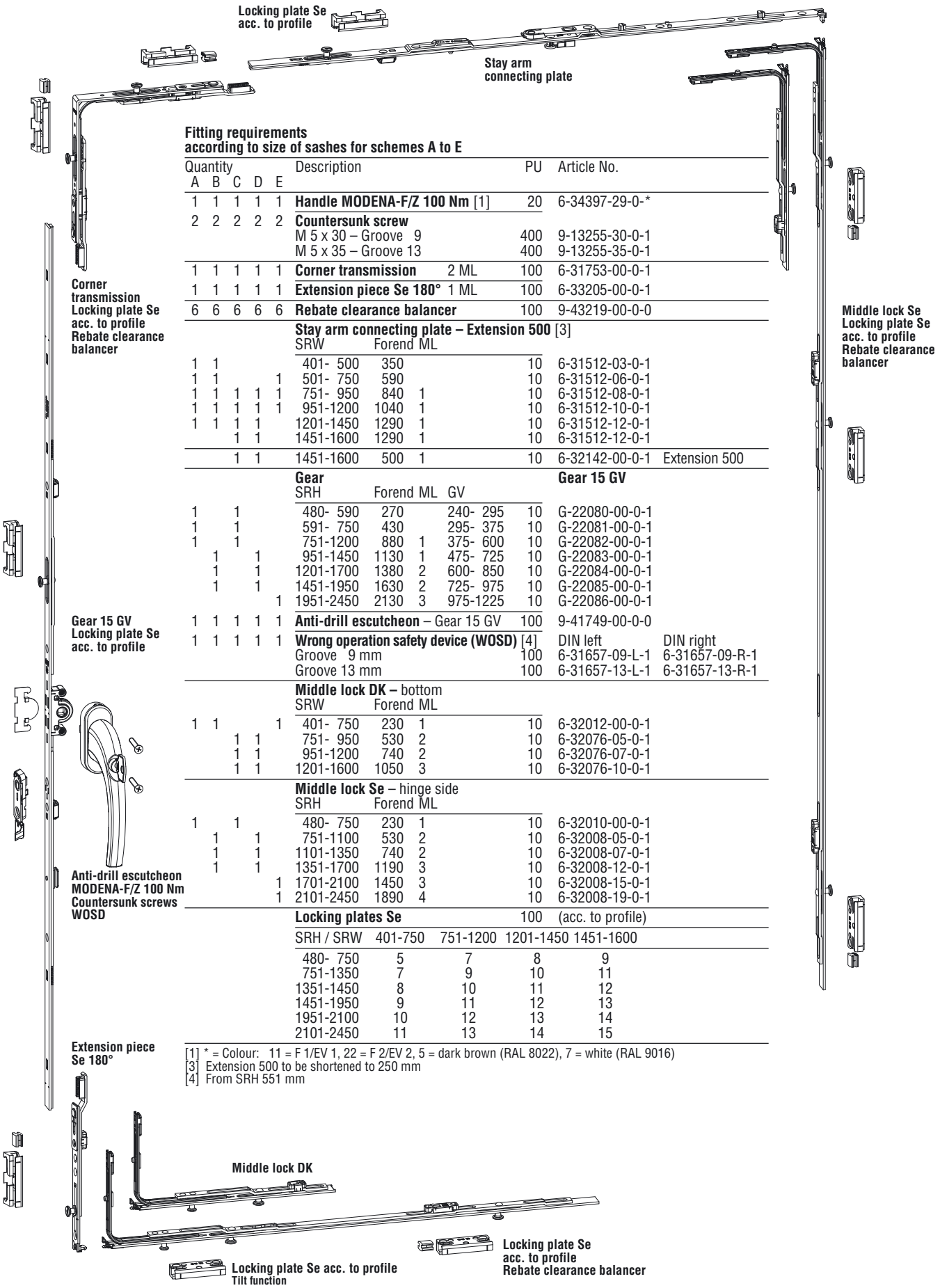

Fitting requirements according to size of sashes for schemes A to E

Quantity A	B	C	D	E	Description				PU	Article No.	
1	1	1	1	1	**Handle MODENA-F/Z 100 Nm** [1]				20	6-34397-29-0-*	
2	2	2	2	2	**Countersunk screw**						
					M 5 x 30 – Groove 9				400	9-13255-30-0-1	
					M 5 x 35 – Groove 13				400	9-13255-35-0-1	
1	1	1	1	1	**Corner transmission**	2 ML			100	6-31753-00-0-1	
1	1	1	1	1	**Extension piece Se 180°**	1 ML			100	6-33205-00-0-1	
6	6	6	6	6	**Rebate clearance balancer**				100	9-43219-00-0-0	
					Stay arm connecting plate – Extension 500 [3]						
					SRW	Forend	ML				
1	1				401- 500	350			10	6-31512-03-0-1	
1	1			1	501- 750	590			10	6-31512-06-0-1	
1	1	1	1	1	751- 950	840	1		10	6-31512-08-0-1	
1	1	1	1	1	951-1200	1040	1		10	6-31512-10-0-1	
1	1	1	1		1201-1450	1290	1		10	6-31512-12-0-1	
		1	1		1451-1600	1290	1		10	6-31512-12-0-1	
		1	1		1451-1600	500	1		10	6-32142-00-0-1	Extension 500
					Gear					**Gear 15 GV**	
					SRH	Forend	ML	GV			
1		1			480- 590	270		240- 295	10	G-22080-00-0-1	
1		1			591- 750	430		295- 375	10	G-22081-00-0-1	
1		1			751-1200	880	1	375- 600	10	G-22082-00-0-1	
	1		1		951-1450	1130	1	475- 725	10	G-22083-00-0-1	
	1		1		1201-1700	1380	2	600- 850	10	G-22084-00-0-1	
	1		1		1451-1950	1630	2	725- 975	10	G-22085-00-0-1	
				1	1951-2450	2130	3	975-1225	10	G-22086-00-0-1	
1	1	1	1	1	**Anti-drill escutcheon** – Gear 15 GV				100	9-41749-00-0-0	
1	1	1	1	1	**Wrong operation safety device (WOSD)** [4]					DIN left	DIN right
					Groove 9 mm				100	6-31657-09-L-1	6-31657-09-R-1
					Groove 13 mm				100	6-31657-13-L-1	6-31657-13-R-1
					Middle lock DK – bottom						
					SRW	Forend	ML				
1	1			1	401- 750	230	1		10	6-32012-00-0-1	
		1	1		751- 950	530	2		10	6-32076-05-0-1	
		1	1		951-1200	740	2		10	6-32076-07-0-1	
		1	1		1201-1600	1050	3		10	6-32076-10-0-1	
					Middle lock Se – hinge side						
					SRH	Forend	ML				
1		1			480- 750	230	1		10	6-32010-00-0-1	
	1		1		751-1100	530	2		10	6-32008-05-0-1	
	1		1		1101-1350	740	2		10	6-32008-07-0-1	
	1		1		1351-1700	1190	3		10	6-32008-12-0-1	
				1	1701-2100	1450	3		10	6-32008-15-0-1	
				1	2101-2450	1890	4		10	6-32008-19-0-1	
					Locking plates Se				100	(acc. to profile)	

SRH / SRW	401-750	751-1200	1201-1450	1451-1600
480- 750	5	7	8	9
751-1350	7	9	10	11
1351-1450	8	10	11	12
1451-1950	9	11	12	13
1951-2100	10	12	13	14
2101-2450	11	13	14	15

[1] * = Colour: 11 = F 1/EV 1, 22 = F 2/EV 2, 5 = dark brown (RAL 8022), 7 = white (RAL 9016)
[3] Extension 500 to be shortened to 250 mm
[4] From SRH 551 mm

Variable gear position, groove position 9 and 13 mm

WK 2

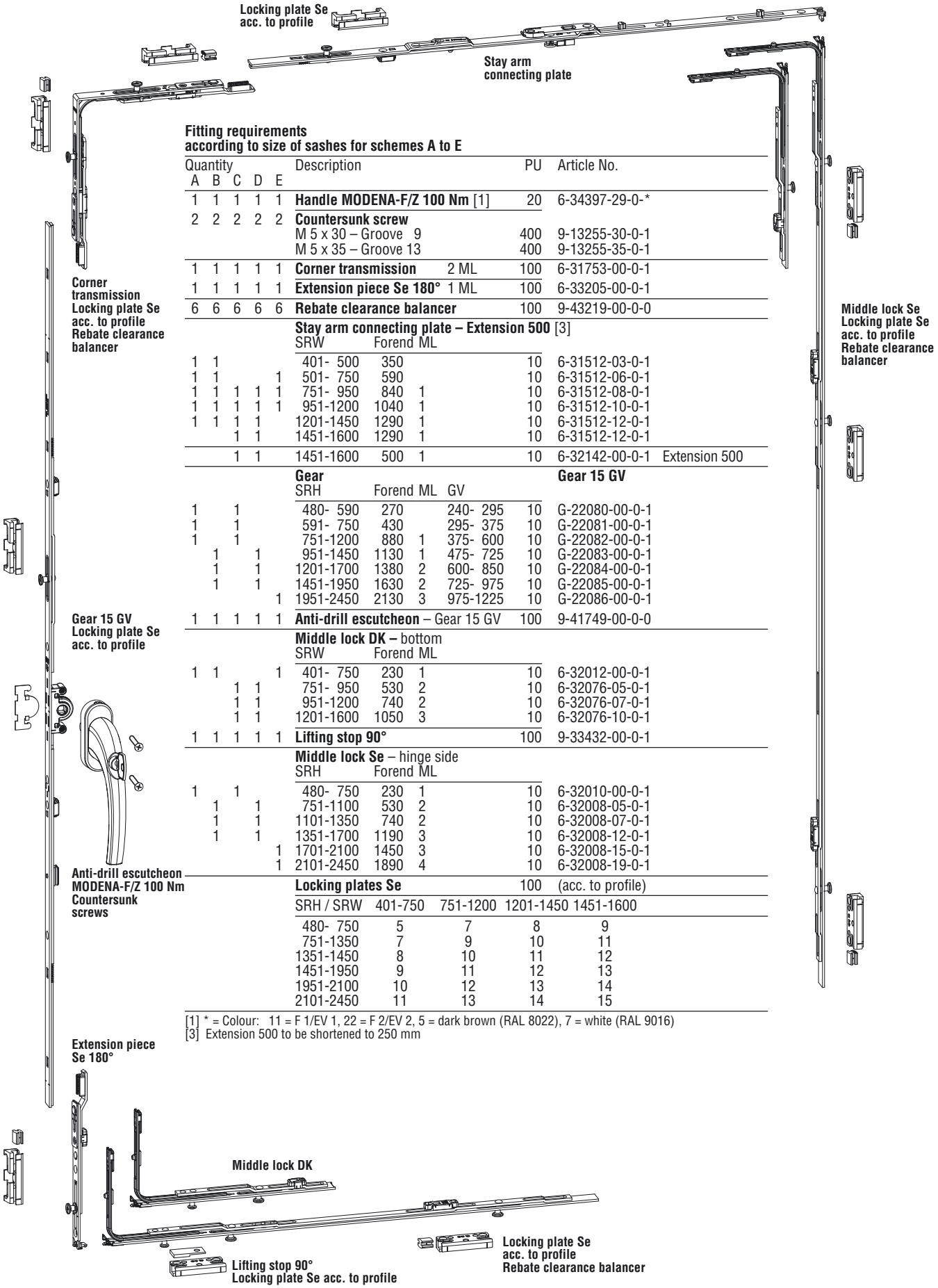

Fitting requirements according to size of sashes for schemes A to E

Quantity A	B	C	D	E	Description				PU	Article No.	
1	1	1	1	1	**Handle MODENA-F/Z 100 Nm** [1]				20	6-34397-29-0-*	
2	2	2	2	2	**Countersunk screw**						
					M 5 x 30 – Groove 9				400	9-13255-30-0-1	
					M 5 x 35 – Groove 13				400	9-13255-35-0-1	
1	1	1	1	1	**Corner transmission**	2 ML			100	6-31753-00-0-1	
1	1	1	1	1	**Extension piece Se 180°**	1 ML			100	6-33205-00-0-1	
6	6	6	6	6	**Rebate clearance balancer**				100	9-43219-00-0-0	
					Stay arm connecting plate – Extension 500 [3]						
					SRW	Forend	ML				
1	1				401- 500	350			10	6-31512-03-0-1	
1	1			1	501- 750	590			10	6-31512-06-0-1	
1	1	1	1	1	751- 950	840	1		10	6-31512-08-0-1	
1	1	1	1	1	951-1200	1040	1		10	6-31512-10-0-1	
1	1	1	1		1201-1450	1290	1		10	6-31512-12-0-1	
		1	1		1451-1600	1290	1		10	6-31512-12-0-1	
		1	1		1451-1600	500	1		10	6-32142-00-0-1	Extension 500
					Gear					**Gear 15 GV**	
					SRH	Forend	ML	GV			
1		1			480- 590	270		240- 295	10	G-22080-00-0-1	
1		1			591- 750	430		295- 375	10	G-22081-00-0-1	
1		1			751-1200	880	1	375- 600	10	G-22082-00-0-1	
	1		1		951-1450	1130	1	475- 725	10	G-22083-00-0-1	
	1		1		1201-1700	1380	2	600- 850	10	G-22084-00-0-1	
	1		1		1451-1950	1630	2	725- 975	10	G-22085-00-0-1	
				1	1951-2450	2130	3	975-1225	10	G-22086-00-0-1	
1	1	1	1	1	**Anti-drill escutcheon** – Gear 15 GV				100	9-41749-00-0-0	
					Middle lock DK – bottom						
					SRW	Forend	ML				
1	1			1	401- 750	230	1		10	6-32012-00-0-1	
		1	1		751- 950	530	2		10	6-32076-05-0-1	
		1	1		951-1200	740	2		10	6-32076-07-0-1	
		1	1		1201-1600	1050	3		10	6-32076-10-0-1	
1	1	1	1	1	**Lifting stop 90°**				100	9-33432-00-0-1	
					Middle lock Se – hinge side						
					SRH	Forend	ML				
1		1			480- 750	230	1		10	6-32010-00-0-1	
	1		1		751-1100	530	2		10	6-32008-05-0-1	
	1		1		1101-1350	740	2		10	6-32008-07-0-1	
	1		1		1351-1700	1190	3		10	6-32008-12-0-1	
				1	1701-2100	1450	3		10	6-32008-15-0-1	
				1	2101-2450	1890	4		10	6-32008-19-0-1	

Locking plates Se 100 (acc. to profile)

SRH / SRW	401-750	751-1200	1201-1450	1451-1600
480- 750	5	7	8	9
751-1350	7	9	10	11
1351-1450	8	10	11	12
1451-1950	9	11	12	13
1951-2100	10	12	13	14
2101-2450	11	13	14	15

[1] * = Colour: 11 = F 1/EV 1, 22 = F 2/EV 2, 5 = dark brown (RAL 8022), 7 = white (RAL 9016)
[3] Extension 500 to be shortened to 250 mm

Variable gear position, groove position 9 and 13 mm

WK 2

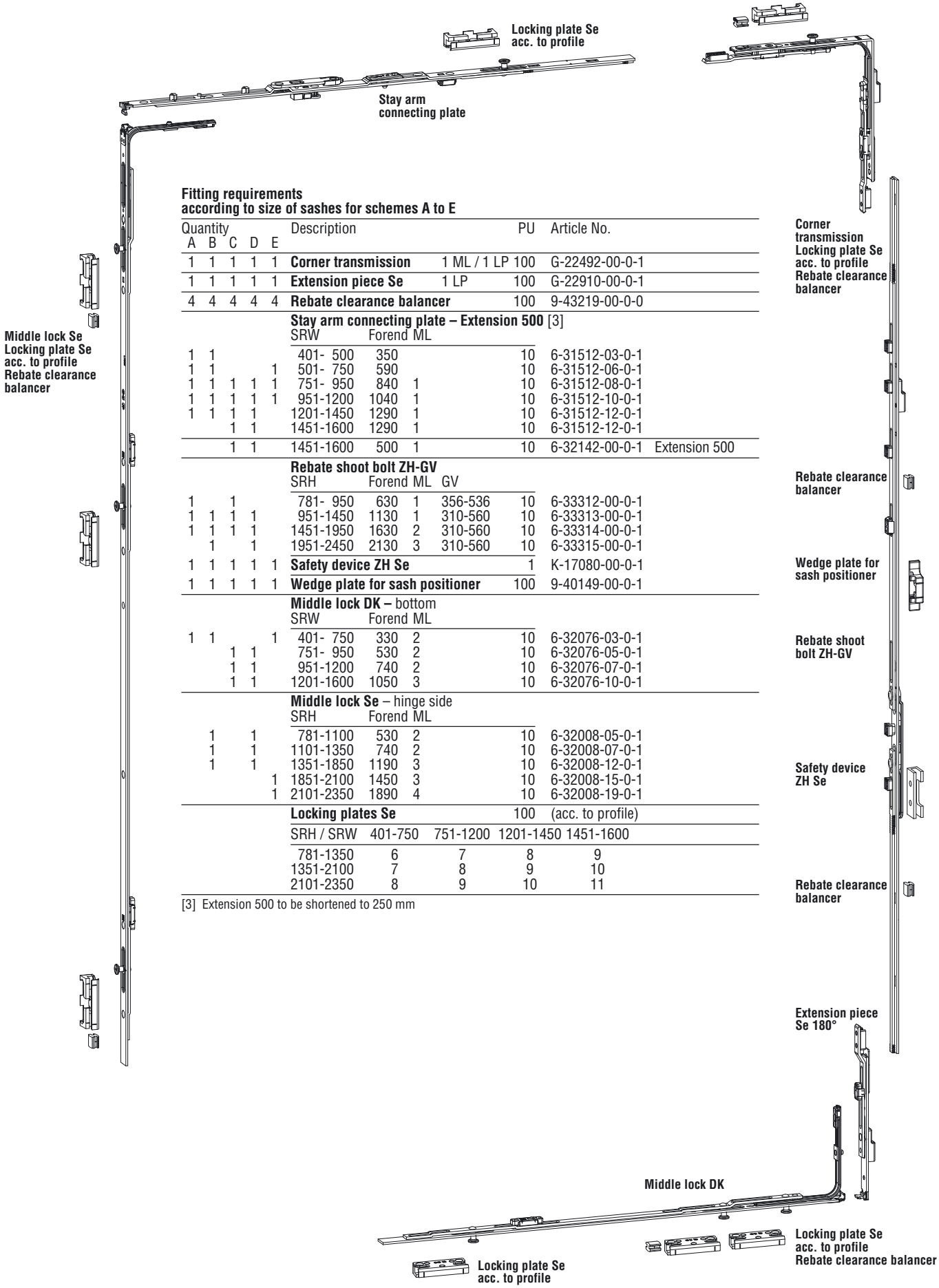

Fitting requirements according to size of sashes for schemes A to E

Quantity A	B	C	D	E	Description				PU	Article No.	
1	1	1	1	1	**Corner transmission**		1 ML / 1 LP		100	G-22492-00-0-1	
1	1	1	1	1	**Extension piece Se**		1 LP		100	G-22910-00-0-1	
4	4	4	4	4	**Rebate clearance balancer**				100	9-43219-00-0-0	
					Stay arm connecting plate – Extension 500 [3]						
					SRW	Forend	ML				
1	1				401- 500	350			10	6-31512-03-0-1	
1	1			1	501- 750	590			10	6-31512-06-0-1	
1	1	1	1	1	751- 950	840	1		10	6-31512-08-0-1	
1	1	1	1	1	951-1200	1040	1		10	6-31512-10-0-1	
1	1	1	1		1201-1450	1290	1		10	6-31512-12-0-1	
		1	1		1451-1600	1290	1		10	6-31512-12-0-1	
		1	1		1451-1600	500	1		10	6-32142-00-0-1	Extension 500
					Rebate shoot bolt ZH-GV						
					SRH	Forend	ML	GV			
1		1			781- 950	630	1	356-536	10	6-33312-00-0-1	
1	1	1	1		951-1450	1130	1	310-560	10	6-33313-00-0-1	
1	1	1	1		1451-1950	1630	2	310-560	10	6-33314-00-0-1	
	1		1		1951-2450	2130	3	310-560	10	6-33315-00-0-1	
1	1	1	1	1	**Safety device ZH Se**				1	K-17080-00-0-1	
1	1	1	1	1	**Wedge plate for sash positioner**				100	9-40149-00-0-1	
					Middle lock DK – bottom						
					SRW	Forend	ML				
1	1			1	401- 750	330	2		10	6-32076-03-0-1	
		1	1		751- 950	530	2		10	6-32076-05-0-1	
		1	1		951-1200	740	2		10	6-32076-07-0-1	
		1	1		1201-1600	1050	3		10	6-32076-10-0-1	
					Middle lock Se – hinge side						
					SRH	Forend	ML				
	1		1		781-1100	530	2		10	6-32008-05-0-1	
	1		1		1101-1350	740	2		10	6-32008-07-0-1	
	1		1		1351-1850	1190	3		10	6-32008-12-0-1	
				1	1851-2100	1450	3		10	6-32008-15-0-1	
				1	2101-2350	1890	4		10	6-32008-19-0-1	
					Locking plates Se				100	(acc. to profile)	

SRH / SRW	401-750	751-1200	1201-1450	1451-1600
781-1350	6	7	8	9
1351-2100	7	8	9	10
2101-2350	8	9	10	11

[3] Extension 500 to be shortened to 250 mm

Variable gear position, groove position 9 and 13 mm

WK 2

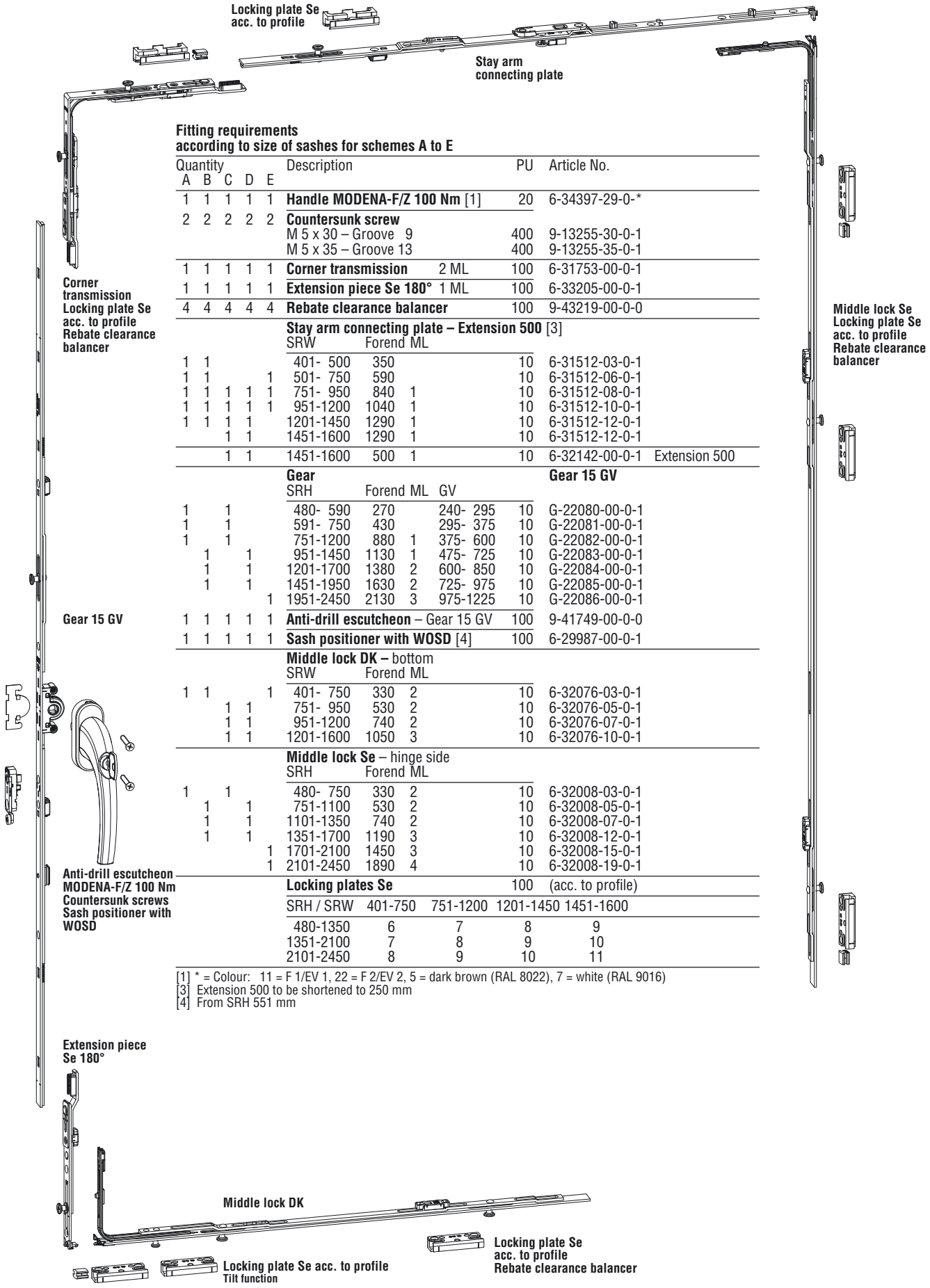

Fitting requirements according to size of sashes for schemes A to E

Quantity A	B	C	D	E	Description				PU	Article No.	
1	1	1	1	1	**Handle MODENA-F/Z 100 Nm** [1]				20	6-34397-29-0-*	
2	2	2	2	2	**Countersunk screw**						
					M 5 x 30 – Groove 9				400	9-13255-30-0-1	
					M 5 x 35 – Groove 13				400	9-13255-35-0-1	
1	1	1	1	1	**Corner transmission**	2 ML			100	6-31753-00-0-1	
1	1	1	1	1	**Extension piece Se 180°**	1 ML			100	6-33205-00-0-1	
4	4	4	4	4	**Rebate clearance balancer**				100	9-43219-00-0-0	
					Stay arm connecting plate – Extension 500 [3]						
					SRW	Forend	ML				
1	1				401- 500	350			10	6-31512-03-0-1	
1	1			1	501- 750	590			10	6-31512-06-0-1	
1	1	1	1	1	751- 950	840	1		10	6-31512-08-0-1	
1	1	1	1	1	951-1200	1040	1		10	6-31512-10-0-1	
1	1	1	1		1201-1450	1290	1		10	6-31512-12-0-1	
		1	1		1451-1600	1290	1		10	6-31512-12-0-1	
		1	1		1451-1600	500	1		10	6-32142-00-0-1	Extension 500
					Gear					**Gear 15 GV**	
					SRH	Forend	ML	GV			
1		1			480- 590	270		240- 295	10	G-22080-00-0-1	
1		1			591- 750	430		295- 375	10	G-22081-00-0-1	
1		1			751-1200	880	1	375- 600	10	G-22082-00-0-1	
	1		1		951-1450	1130	1	475- 725	10	G-22083-00-0-1	
	1		1		1201-1700	1380	2	600- 850	10	G-22084-00-0-1	
	1		1		1451-1950	1630	2	725- 975	10	G-22085-00-0-1	
				1	1951-2450	2130	3	975-1225	10	G-22086-00-0-1	
1	1	1	1	1	**Anti-drill escutcheon** – Gear 15 GV				100	9-41749-00-0-0	
1	1	1	1	1	**Sash positioner with WOSD** [4]				100	6-29987-00-0-1	
					Middle lock DK – bottom						
					SRW	Forend	ML				
1	1			1	401- 750	330	2		10	6-32076-03-0-1	
		1	1		751- 950	530	2		10	6-32076-05-0-1	
		1	1		951-1200	740	2		10	6-32076-07-0-1	
		1	1		1201-1600	1050	3		10	6-32076-10-0-1	
					Middle lock Se – hinge side						
					SRH	Forend	ML				
1		1			480- 750	330	2		10	6-32008-03-0-1	
	1		1		751-1100	530	2		10	6-32008-05-0-1	
	1		1		1101-1350	740	2		10	6-32008-07-0-1	
	1		1		1351-1700	1190	3		10	6-32008-12-0-1	
				1	1701-2100	1450	3		10	6-32008-15-0-1	
				1	2101-2450	1890	4		10	6-32008-19-0-1	
					Locking plates Se				100	(acc. to profile)	

SRH / SRW	401-750	751-1200	1201-1450	1451-1600
480-1350	6	7	8	9
1351-2100	7	8	9	10
2101-2450	8	9	10	11

[1] * = Colour: 11 = F 1/EV 1, 22 = F 2/EV 2, 5 = dark brown (RAL 8022), 7 = white (RAL 9016)
[3] Extension 500 to be shortened to 250 mm
[4] From SRH 551 mm

Variable gear position, groove position 9 and 13 mm

WK 2

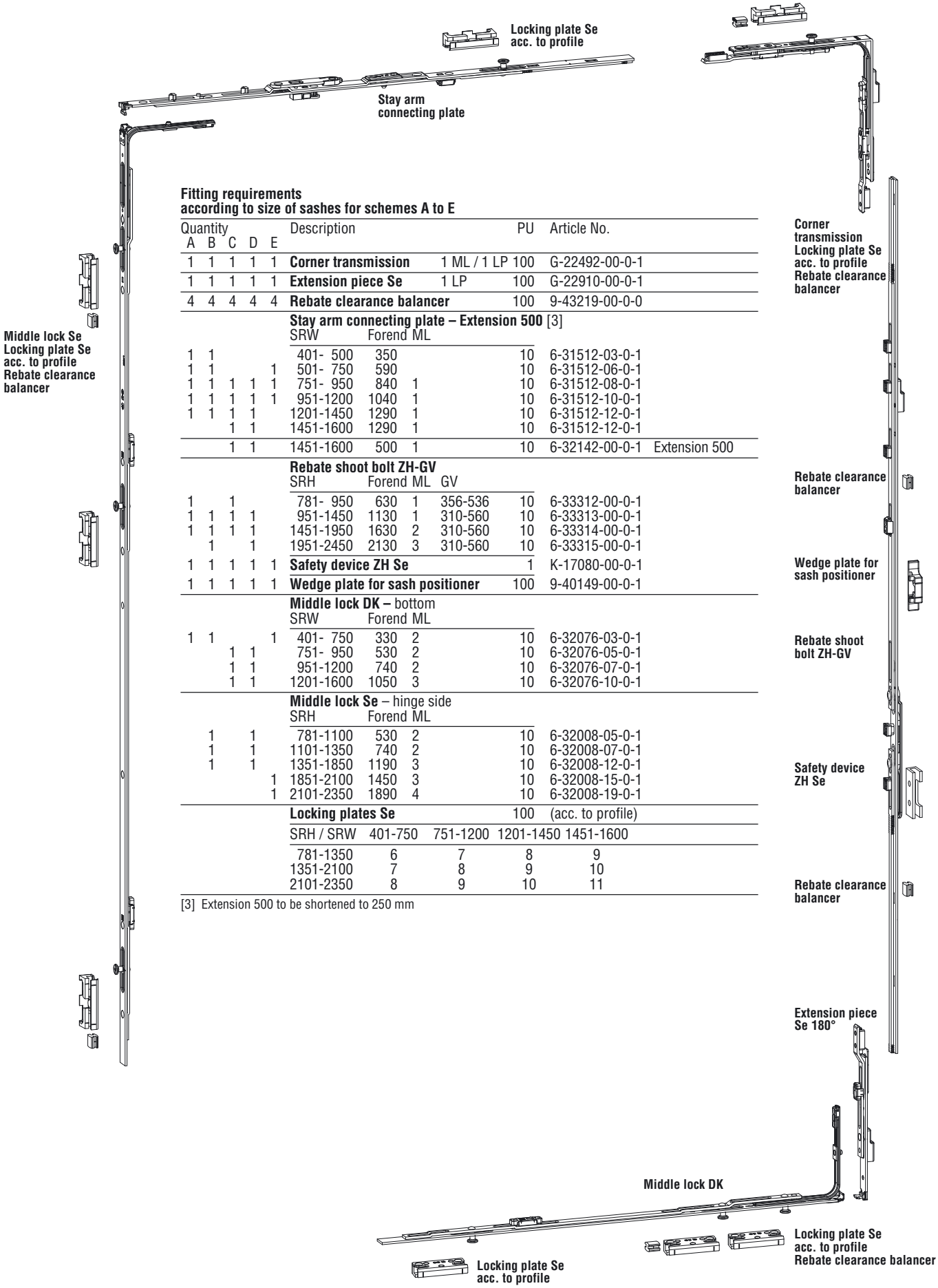

Fitting requirements according to size of sashes for schemes A to E

Quantity A	B	C	D	E	Description				PU	Article No.	
1	1	1	1	1	**Corner transmission**	1 ML / 1 LP			100	G-22492-00-0-1	
1	1	1	1	1	**Extension piece Se**	1 LP			100	G-22910-00-0-1	
4	4	4	4	4	**Rebate clearance balancer**				100	9-43219-00-0-0	
					Stay arm connecting plate – Extension 500 [3]						
					SRW	Forend	ML				
1	1				401- 500	350			10	6-31512-03-0-1	
1	1			1	501- 750	590			10	6-31512-06-0-1	
1	1	1	1	1	751- 950	840	1		10	6-31512-08-0-1	
1	1	1	1	1	951-1200	1040	1		10	6-31512-10-0-1	
1	1	1	1		1201-1450	1290	1		10	6-31512-12-0-1	
		1	1		1451-1600	1290	1		10	6-31512-12-0-1	
		1	1		1451-1600	500	1		10	6-32142-00-0-1	Extension 500
					Rebate shoot bolt ZH-GV						
					SRH	Forend	ML	GV			
1		1			781- 950	630	1	356-536	10	6-33312-00-0-1	
1	1	1	1		951-1450	1130	1	310-560	10	6-33313-00-0-1	
1	1	1	1		1451-1950	1630	2	310-560	10	6-33314-00-0-1	
	1		1		1951-2450	2130	3	310-560	10	6-33315-00-0-1	
1	1	1	1	1	**Safety device ZH Se**				1	K-17080-00-0-1	
1	1	1	1	1	**Wedge plate for sash positioner**				100	9-40149-00-0-1	
					Middle lock DK – bottom						
					SRW	Forend	ML				
1	1			1	401- 750	330	2		10	6-32076-03-0-1	
		1	1		751- 950	530	2		10	6-32076-05-0-1	
		1	1		951-1200	740	2		10	6-32076-07-0-1	
		1	1		1201-1600	1050	3		10	6-32076-10-0-1	
					Middle lock Se – hinge side						
					SRH	Forend	ML				
	1		1		781-1100	530	2		10	6-32008-05-0-1	
	1		1		1101-1350	740	2		10	6-32008-07-0-1	
	1		1		1351-1850	1190	3		10	6-32008-12-0-1	
				1	1851-2100	1450	3		10	6-32008-15-0-1	
				1	2101-2350	1890	4		10	6-32008-19-0-1	
					Locking plates Se				100	(acc. to profile)	

SRH / SRW	401-750	751-1200	1201-1450	1451-1600
781-1350	6	7	8	9
1351-2100	7	8	9	10
2101-2350	8	9	10	11

[3] Extension 500 to be shortened to 250 mm

Variable gear position, groove position 9 and 13 mm

WK 2

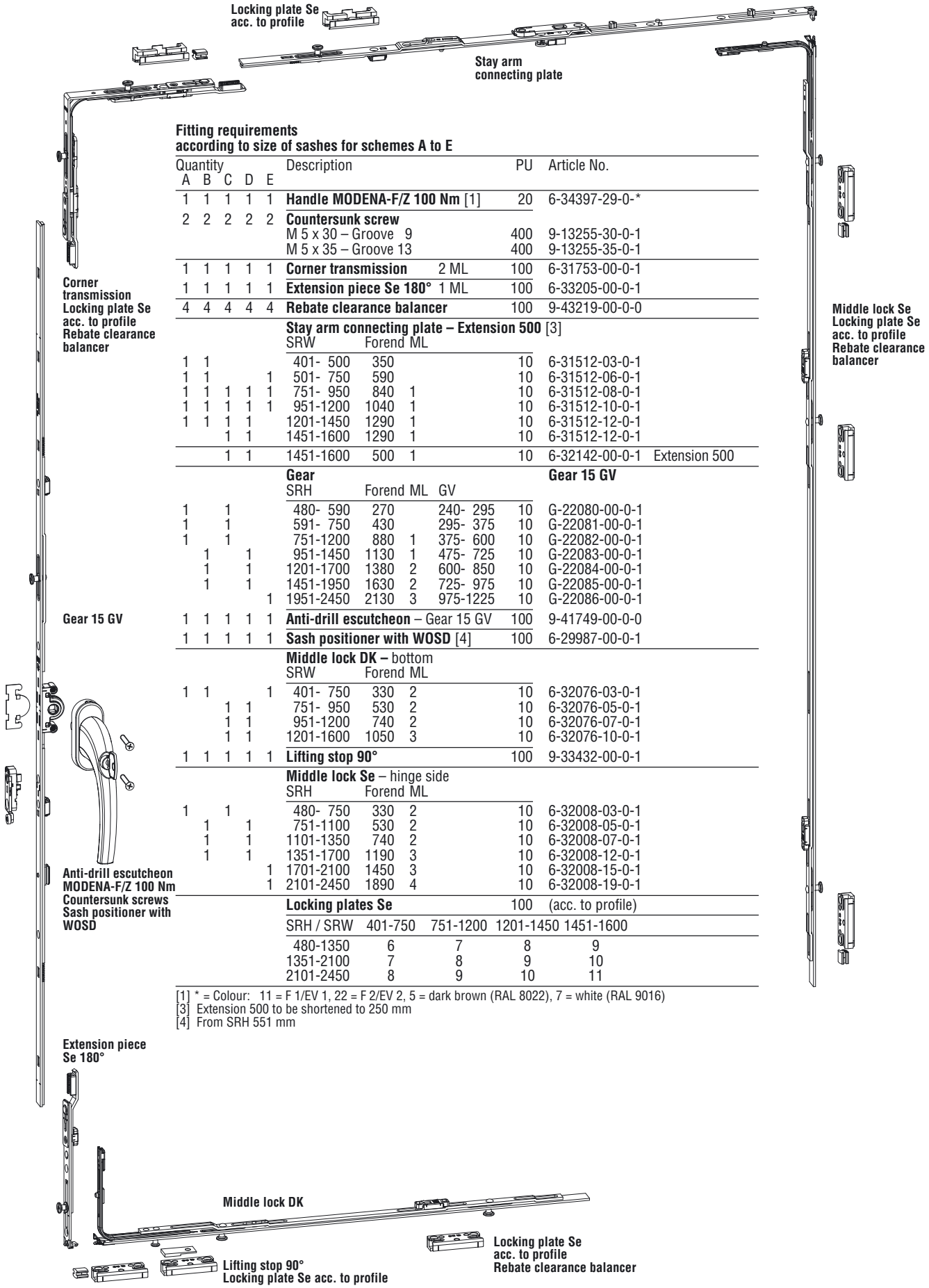

Fitting requirements according to size of sashes for schemes A to E

Quantity A	B	C	D	E	Description				PU	Article No.	
1	1	1	1	1	**Handle MODENA-F/Z 100 Nm** [1]				20	6-34397-29-0-*	
2	2	2	2	2	**Countersunk screw**						
					M 5 x 30 – Groove 9				400	9-13255-30-0-1	
					M 5 x 35 – Groove 13				400	9-13255-35-0-1	
1	1	1	1	1	**Corner transmission**	2 ML			100	6-31753-00-0-1	
1	1	1	1	1	**Extension piece Se 180°**	1 ML			100	6-33205-00-0-1	
4	4	4	4	4	**Rebate clearance balancer**				100	9-43219-00-0-0	
					Stay arm connecting plate – Extension 500 [3]						
					SRW	Forend	ML				
1	1				401- 500	350			10	6-31512-03-0-1	
1	1			1	501- 750	590			10	6-31512-06-0-1	
1	1	1	1	1	751- 950	840	1		10	6-31512-08-0-1	
1	1	1	1	1	951-1200	1040	1		10	6-31512-10-0-1	
1	1	1	1		1201-1450	1290	1		10	6-31512-12-0-1	
		1	1		1451-1600	1290	1		10	6-31512-12-0-1	
		1	1		1451-1600	500	1		10	6-32142-00-0-1	Extension 500
					Gear					**Gear 15 GV**	
					SRH	Forend	ML	GV			
1		1			480- 590	270		240- 295	10	G-22080-00-0-1	
1		1			591- 750	430		295- 375	10	G-22081-00-0-1	
1		1			751-1200	880	1	375- 600	10	G-22082-00-0-1	
	1		1		951-1450	1130	1	475- 725	10	G-22083-00-0-1	
	1		1		1201-1700	1380	2	600- 850	10	G-22084-00-0-1	
	1		1		1451-1950	1630	2	725- 975	10	G-22085-00-0-1	
				1	1951-2450	2130	3	975-1225	10	G-22086-00-0-1	
1	1	1	1	1	**Anti-drill escutcheon** – Gear 15 GV				100	9-41749-00-0-0	
1	1	1	1	1	**Sash positioner with WOSD** [4]				100	6-29987-00-0-1	
					Middle lock DK – bottom						
					SRW	Forend	ML				
1	1			1	401- 750	330	2		10	6-32076-03-0-1	
		1	1		751- 950	530	2		10	6-32076-05-0-1	
		1	1		951-1200	740	2		10	6-32076-07-0-1	
		1	1		1201-1600	1050	3		10	6-32076-10-0-1	
1	1	1	1	1	**Lifting stop 90°**				100	9-33432-00-0-1	
					Middle lock Se – hinge side						
					SRH	Forend	ML				
1		1			480- 750	330	2		10	6-32008-03-0-1	
	1		1		751-1100	530	2		10	6-32008-05-0-1	
	1		1		1101-1350	740	2		10	6-32008-07-0-1	
	1		1		1351-1700	1190	3		10	6-32008-12-0-1	
				1	1701-2100	1450	3		10	6-32008-15-0-1	
				1	2101-2450	1890	4		10	6-32008-19-0-1	
					Locking plates Se				100	(acc. to profile)	

SRH / SRW	401-750	751-1200	1201-1450	1451-1600
480-1350	6	7	8	9
1351-2100	7	8	9	10
2101-2450	8	9	10	11

[1] * = Colour: 11 = F 1/EV 1, 22 = F 2/EV 2, 5 = dark brown (RAL 8022), 7 = white (RAL 9016)
[3] Extension 500 to be shortened to 250 mm
[4] From SRH 551 mm

Variable gear position, groove position 9 and 13 mm

Basic security

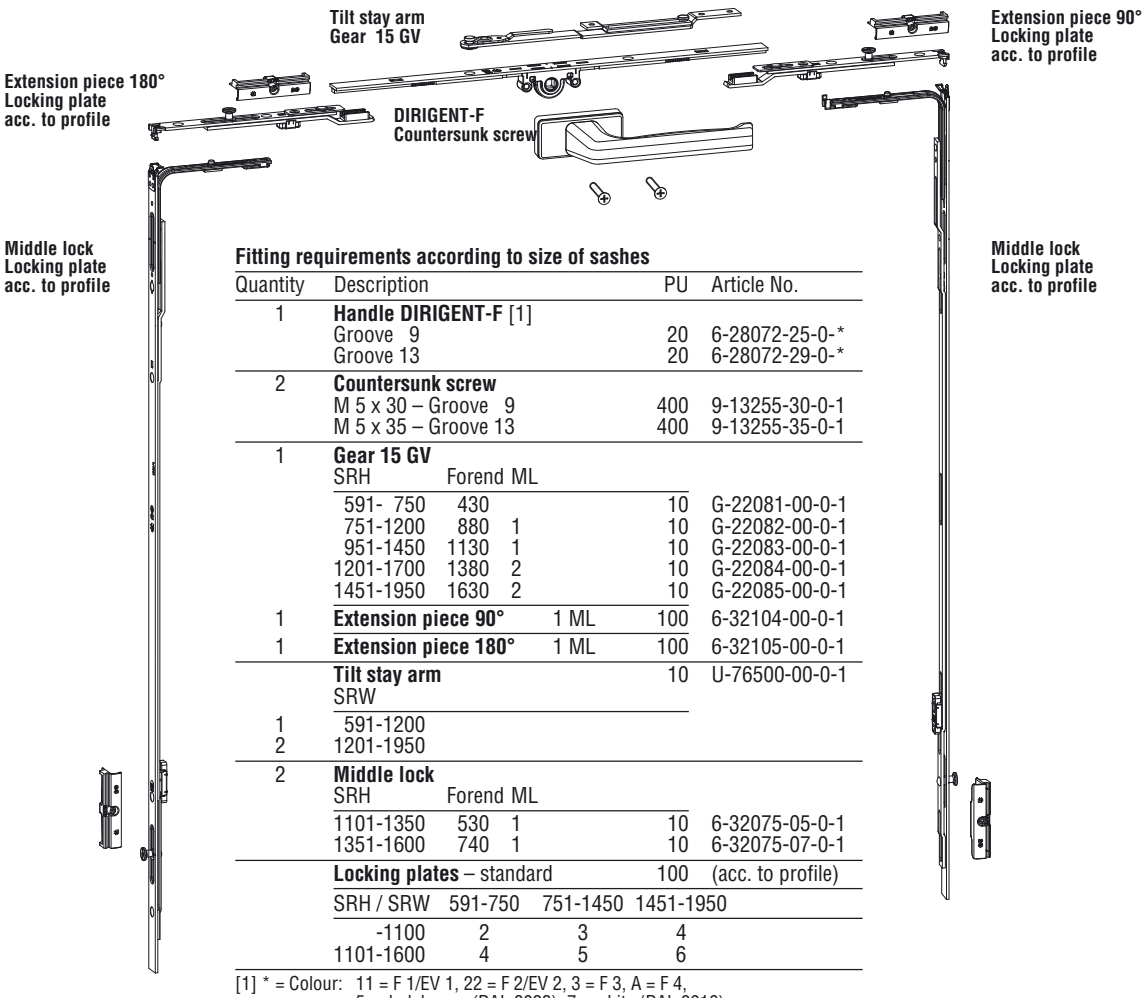

Fitting requirements according to size of sashes

Quantity	Description				PU	Article No.
1	**Handle DIRIGENT-F** [1]					
	Groove 9				20	6-28072-25-0-*
	Groove 13				20	6-28072-29-0-*
2	**Countersunk screw**					
	M 5 x 30 – Groove 9				400	9-13255-30-0-1
	M 5 x 35 – Groove 13				400	9-13255-35-0-1
1	**Gear 15 GV**					
	SRH	Forend	ML			
	591- 750	430			10	G-22081-00-0-1
	751-1200	880	1		10	G-22082-00-0-1
	951-1450	1130	1		10	G-22083-00-0-1
	1201-1700	1380	2		10	G-22084-00-0-1
	1451-1950	1630	2		10	G-22085-00-0-1
1	**Extension piece 90°**			1 ML	100	6-32104-00-0-1
1	**Extension piece 180°**			1 ML	100	6-32105-00-0-1
	Tilt stay arm				10	U-76500-00-0-1
	SRW					
1	591-1200					
2	1201-1950					
2	**Middle lock**					
	SRH	Forend	ML			
	1101-1350	530	1		10	6-32075-05-0-1
	1351-1600	740	1		10	6-32075-07-0-1
	Locking plates – standard				100	(acc. to profile)
	SRH / SRW	591-750	751-1450	1451-1950		
	-1100	2	3	4		
	1101-1600	4	5	6		

[1] * = Colour: 11 = F 1/EV 1, 22 = F 2/EV 2, 3 = F 3, A = F 4,
5 = dark brown (RAL 8022), 7 = white (RAL 9016),
C = titanium painted

Tilt-turn, first tilt, side hung, inactive and tilt sashes – for sash with undercut fitting groove 16 mm

Tilt-turn, first tilt, side hung and inactive sashes

Fitting requirements for schemes A to E

Qty.	Description	PU	Article No.
1	**Stay arm tilt-turn**		
	SRW		
	280- 500	10	6-31518-03-0-1
	501- 750	10	6-31518-06-0-1
	751-1200	10	6-31518-08-0-1
	1201-1600	10	6-31518-12-0-1
1	**Stay arm first tilt**		
	SRW		
	280- 500	10	6-33777-03-0-1
	501- 750	10	6-33777-06-0-1
	751-1200	10	6-33777-08-0-1
	1201-1600	10	6-33777-12-0-1
1	**Side hung sash hinge**	10	6-31519-00-0-1

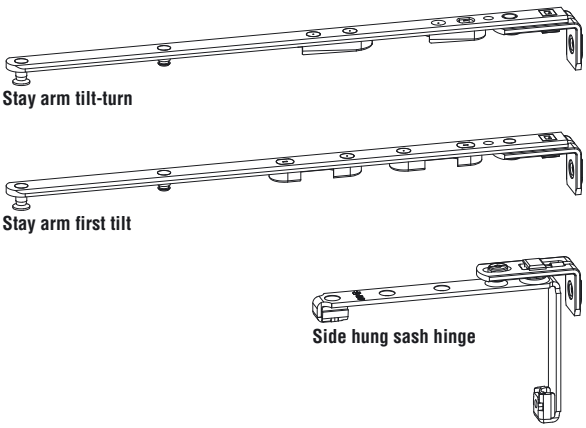

Tilt-turn, first tilt, side hung, inactive and tilt sashes

Fitting requirements for schemes A to E

Qty.	Description		PU	Article No.
1	**Bag of hinge side** [1]			
	for sash with undercut fitting groove 16 mm			
	Groove 9	Sash overlap 18	10	K-17125-18-0-*
	Frame groove 14 / 18	Sash overlap 20	10	K-17125-20-0-*
	Groove 9	Sash overlap 18	10	K-17506-18-0-*
	Frame groove 10 / 14	Sash overlap 20	10	K-17506-20-0-*
	Contents			
	1 Stay arm bearing [1]	Sash overlap 18		6-31591-18-0-*
		Sash overlap 20		6-31591-20-0-*
	1 Stay arm bearing axle			6-30874-00-0-6
	1 Stay arm hinge [1]	Sash overlap 18		6-31592-18-0-*
		Sash overlap 20		6-31592-20-0-*
	1 Bearing sleeve			9-39805-00-0-6
	2 Covers			9-39807-00-0-6
	1 Corner bearing [1]	Sash overlap 18		9-39812-00-0-*
		Sash overlap 20		9-43356-00-0-*
	1 Corner bearing case	Frame groove 14/18		6-30872-00-0-1
		Frame groove 10/14		6-32055-00-0-1
	1 Corner bearing axle			6-31087-00-0-6
	1 Corner hinge [1]	Sash overlap 18		6-31575-18-0-*
		Sash overlap 20		6-31575-20-0-*
	1 Clamping angle			6-33462-00-0-1
	2 Countersunk screws			9-13489-12-R-8
	1 Bearing sleeve 130	Sash weight > 80 kg		9-43545-00-0-1
1	**Bag of additional parts – 130 kg** [1]		1	K-16595-00-0-*
	Contents			
	1 Stay arm bearing 130 [1]			9-41710-00-0-*
	1 Stay arm bearing axle 130			9-39809-01-0-6
	1 Countersunk screw M 5 x 16			9-33841-16-R-8
1	**Bag of middle hinge** [1]			
	for sash with undercut fitting groove 16 mm			
	Groove 9	Sash overlap 18	10	K-17216-18-0-*
		Sash overlap 20	10	K-17216-20-0-*
	Contents			
	1 Bearing hinge [1]	Sash overlap 18		6-33727-18-0-*
		Sash overlap 20		6-33727-20-0-*
	1 Middle hinge [1]	Sash overlap 18		6-33751-18-0-*
		Sash overlap 20		6-33751-20-0-*
	1 Stay arm bearing axle			6-30874-00-0-6
	1 Bearing sleeve			9-39805-00-0-6
	1 Cover			9-39807-00-0-6
1	**Bag of tilt sash hinge**[1]			
	for sash with undercut fitting groove 16 mm			
	Groove 9	Sash overlap 18	10	K-17212-18-0-*
		Sash overlap 20	10	K-17212-20-0-*
	Contents			
	1 Bearing hinge [1]	Sash overlap 18		6-33727-18-0-*
		Sash overlap 20		6-33727-20-0-*
	1 Middle hinge [1]	Sash overlap 18		6-33749-18-0-*
		Sash overlap 20		6-33749-20-0-*
	1 Clamping plate			6-33728-00-0-1
	1 Stay arm bearing axle			6-30874-00-0-6
	1 Bearing sleeve			9-39805-00-0-6
	1 Cover			9-39807-00-0-6
	2 Raised countersunk head screw M 5 x 16			9-13489-16-R-8

[1] * = Colour: 0 = uncoated, 1 = F 1/EV 1, 6 = black (RAL 9005), 7 = white (RAL 9016), 7T = white (RAL 9010)

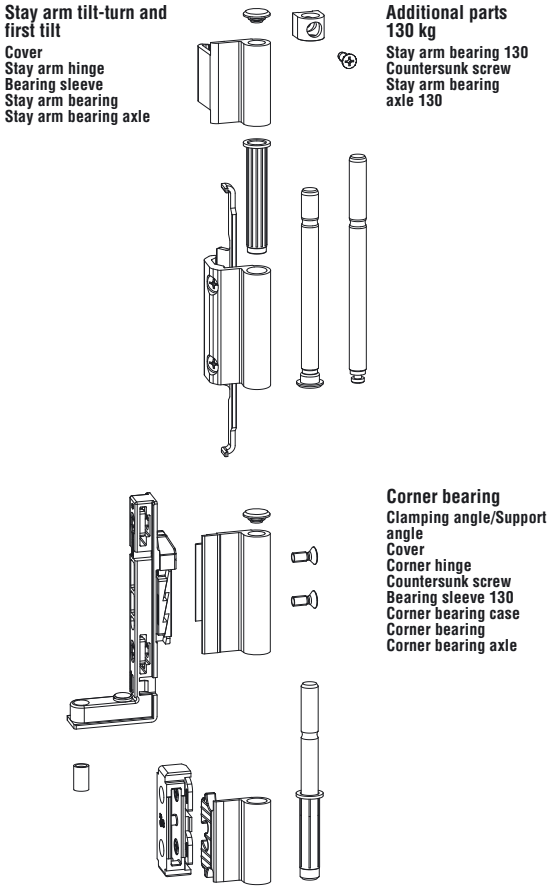

Optional part

Qty.	Description	PU	Article No.
1	**Bag of bearing sleeves/covers light grey** [1]	1	K-17803-00-0-1
	for all bags of hinge side/middle hinge UNI-JET C		
	Contents		
	1 Bearing sleeve		9-39805-00-0-1
	2 Covers		9-39807-00-0-1
	1 Corner bearing sleeve		9-39831-00-0-1
	1 Safety cover		9-39806-00-0-1

[1] * = Colour: 0 = uncoated, 1 = F 1/EV 1, 6 = black (RAL 9005), 7 = white (RAL 9016), 7T = white (RAL 9010)

Working drawing 0-44708

Tilt-turn, first tilt, side hung, inactive and tilt sashes – for sash with plane fitting groove 16 mm

Tilt-turn, first tilt, side hung and inactive sashes

Fitting requirements for schemes A to E

Qty.	Description	PU	Article No.
1	**Stay arm tilt-turn**		
	SRW		
	280- 500	10	6-31518-03-0-1
	501- 750	10	6-31518-06-0-1
	751-1200	10	6-31518-08-0-1
	1201-1600	10	6-31518-12-0-1
1	**Stay arm first tilt**		
	SRW		
	280- 500	10	6-33777-03-0-1
	501- 750	10	6-33777-06-0-1
	751-1200	10	6-33777-08-0-1
	1201-1600	10	6-33777-12-0-1
1	**Side hung sash hinge**	10	6-31519-00-0-1

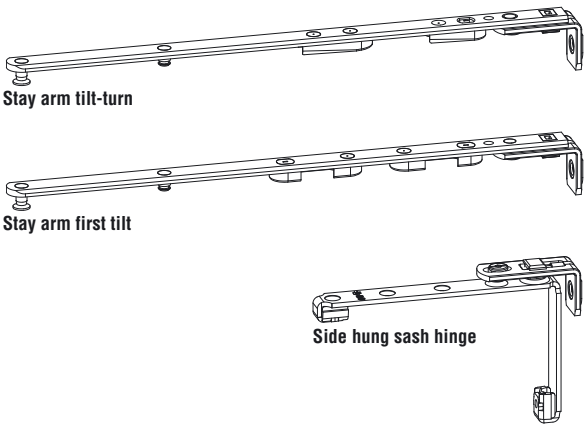

Tilt-turn, first tilt, side hung, inactive and tilt sashes

Fitting requirements for schemes A to E

Qty.	Description		PU	Article No.
1	**Bag of hinge side** [1]			
	for sash with plane fitting groove 16 mm			
	Groove 9	Sash overlap 18	10	K-17126-18-0-*
	Frame groove 14 / 18	Sash overlap 20	10	K-17126-20-0-*
	Groove 9	Sash overlap 18	10	K-17507-18-0-*
	Frame groove 10 / 14	Sash overlap 20	10	K-17507-20-0-*
	Contents			
	1 Stay arm bearing [1]	Sash overlap 18		6-31591-18-0-*
		Sash overlap 20		6-31591-20-0-*
	1 Stay arm bearing axle			6-30874-00-0-6
	1 Stay arm hinge [1]	Sash overlap 18		6-31592-18-0-*
		Sash overlap 20		6-31592-20-0-*
	1 Bearing sleeve			9-39805-00-0-6
	2 Covers			9-39807-00-0-6
	1 Corner bearing [1]	Sash overlap 18		9-39812-00-0-*
		Sash overlap 20		9-43356-00-0-*
	1 Corner bearing case	Frame groove 14/18		6-30872-00-0-1
		Frame groove 10/14		6-32055-00-0-1
	1 Corner bearing axle			6-31087-00-0-6
	1 Corner hinge [1]	Sash overlap 18		6-31575-18-0-*
		Sash overlap 20		6-31575-20-0-*
	1 Support angle			6-33463-00-0-1
	2 Countersunk screws			9-13489-12-R-8
	1 Bearing sleeve 130	Sash weight > 80 kg		9-43545-00-0-1
1	**Bag of additional parts – 130 kg** [1]		1	K-16595-00-0-*
	Contents			
	1 Stay arm bearing 130 [1]			9-41710-00-0-*
	1 Stay arm bearing axle 130			9-39809-01-0-6
	1 Countersunk screw M 5 x 16			9-33841-16-R-8
1	**Bag of middle hinge** [1]			
	for sash with plane fitting groove 16 mm			
	Groove 9	Sash overlap 18	10	K-17217-18-0-*
		Sash overlap 20	10	K-17217-20-0-*
	Contents			
	1 Bearing hinge [1]	Sash overlap 18		6-33727-18-0-*
		Sash overlap 20		6-33727-20-0-*
	1 Middle hinge [1]	Sash overlap 18		6-33752-18-0-*
		Sash overlap 20		6-33752-20-0-*
	1 Stay arm bearing axle			6-30874-00-0-6
	1 Bearing sleeve			9-39805-00-0-6
	1 Cover			9-39807-00-0-6
1	**Bag of tilt sash hinge**[1]			
	for sash with plane fitting groove 16 mm			
	Groove 9	Sash overlap 18	10	K-17213-18-0-*
		Sash overlap 20	10	K-17213-20-0-*
	Contents			
	1 Bearing hinge [1]	Sash overlap 18		6-33727-18-0-*
		Sash overlap 20		6-33727-20-0-*
	1 Middle hinge [1]	Sash overlap 18		6-33749-18-0-*
		Sash overlap 20		6-33749-20-0-*
	1 Screw plate			6-33729-00-0-1
	1 Stay arm bearing axle			6-30874-00-0-6
	1 Bearing sleeve			9-39805-00-0-6
	1 Cover			9-39807-00-0-6
	2 Raised countersunk head screw M 5 x 16			9-13489-16-R-8

[1] * = Colour: 0 = uncoated, 1 = F 1/EV 1, 6 = black (RAL 9005), 7 = white (RAL 9016), 7T = white (RAL 9010)

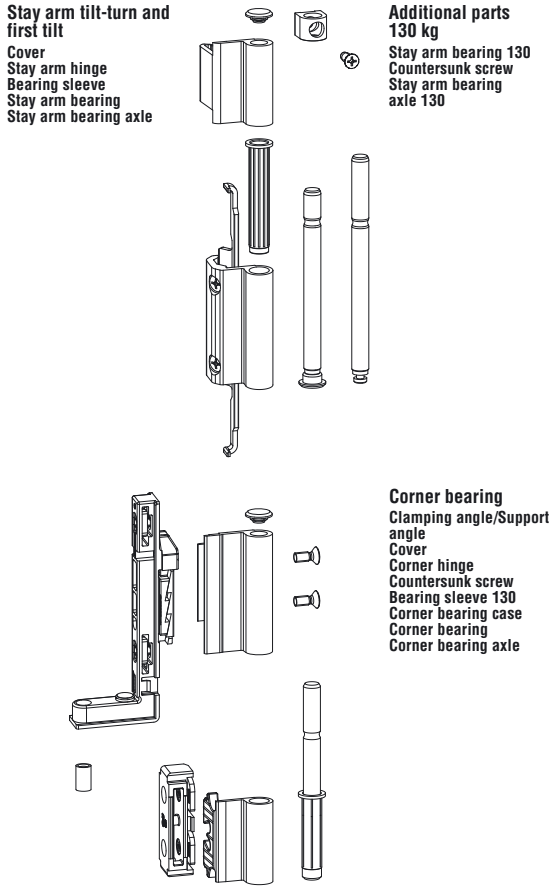

Optional part

Qty.	Description	PU	Article No.
1	**Bag of bearing sleeves/covers light grey** [1]	1	K-17803-00-0-1
	for all bags of hinge side/middle hinge UNI-JET C		
	Contents		
	1 Bearing sleeve		9-39805-00-0-1
	2 Covers		9-39807-00-0-1
	1 Corner bearing sleeve		9-39831-00-0-1
	1 Safety cover		9-39806-00-0-1

[1] * = Colour: 0 = uncoated, 1 = F 1/EV 1, 6 = black (RAL 9005), 7 = white (RAL 9016), 7T = white (RAL 9010)

Working drawing 0-44708

Tilt-turn, first tilt, side hung, inactive and tilt sashes – for sash with undercut fitting groove 16 mm

Tilt-turn, first tilt, side hung and inactive sashes

Fitting requirements for schemes A to E

Qty.	Description	PU	Article No.
1	**Stay arm tilt-turn** SRW		
	280- 500	10	6-31518-03-0-1
	501- 750	10	6-31518-06-0-1
	751-1200	10	6-31518-08-0-1
	1201-1600	10	6-31518-12-0-1
1	**Stay arm first tilt** FFB		
	280- 500	10	6-33777-03-0-1
	501- 750	10	6-33777-06-0-1
	751-1200	10	6-33777-08-0-1
	1201-1600	10	6-33777-12-0-1
1	**Side hung sash hinge**	10	6-31519-00-0-1

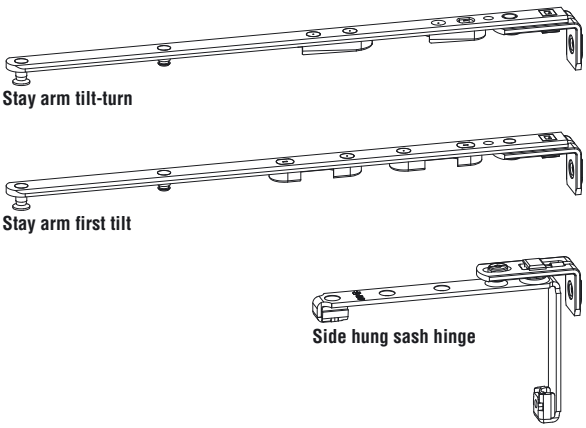

Tilt-turn, first tilt, side hung, inactive and tilt sashes

Fitting requirements for schemes A to E

Qty.	Description		PU	Article No.
1	**Bag of hinge side** [1] **for sash with plane fitting groove 16 mm**			
	Groove 13	Sash overlap 18	10	K-17127-18-0-*
	Frame groove 14 / 18	Sash overlap 20	10	K-17127-20-0-*
	Groove 13	Sash overlap 18	10	K-17508-18-0-*
	Frame groove 10 / 14			
	Contents			
	1 Stay arm bearing [1]	Sash overlap 18		6-31591-18-0-*
		Sash overlap 20		6-31591-20-0-*
	1 Stay arm bearing axle			6-30874-00-0-6
	1 Stay arm hinge [1]	Sash overlap 18		6-33433-18-0-*
		Sash overlap 20		6-33433-20-0-*
	1 Bearing sleeve			9-39805-00-0-6
	2 Covers			9-39807-00-0-6
	1 Corner bearing [1]	Sash overlap 18		9-39812-00-0-*
		Sash overlap 20		9-43356-00-0-*
	1 Corner bearing case	Frame groove 14/18		6-30872-00-0-1
		Frame groove 10/14		6-32055-00-0-1
	1 Corner bearing axle			6-31087-00-0-6
	1 Corner hinge [1]	Sash overlap 18		6-33432-18-0-*
		Sash overlap 20		6-33432-20-0-*
	1 Clamping angle			6-33462-00-0-1
	2 Countersunk screws			9-13489-12-R-8
	1 Bearing sleeve 130	Sash weight > 80 kg		9-43545-00-0-1
1	**Bag of additional parts 130 kg** [1]		1	K-16595-00-0-*
	Contents			
	1 Stay arm bearing 130 [1]			9-41710-00-0-*
	1 Stay arm bearing axle 130			9-39809-01-0-6
	1 Countersunk screw M 5 x 16			9-33841-16-R-8
1	**Bag of middle hinge** [1] **for sash with undercut fitting groove 16 mm**			
	Groove 13	Sash overlap 18	10	K-17218-18-0-*
		Sash overlap 20	10	K-17218-20-0-*
	Contents			
	1 Bearing hinge [1]	Sash overlap 18		6-33727-18-0-*
		Sash overlap 20		6-33727-20-0-*
	1 Middle hinge [1]	Sash overlap 18		6-33806-18-0-*
		Sash overlap 20		6-33806-20-0-*
	1 Stay arm bearing axle			6-30874-00-0-6
	1 Bearing sleeve			9-39805-00-0-6
	1 Cover			9-39807-00-0-6
1	**Bag of tilt sash hinge**[1] **for sash with undercut fitting groove 16 mm**			
	Groove 13	Sash overlap 18	10	K-17214-18-0-*
		Sash overlap 20	10	K-17214-20-0-*
	Contents			
	1 Bearing hinge [1]	Sash overlap 18		6-33727-18-0-*
		Sash overlap 20		6-33727-20-0-*
	1 Middle hinge [1]	Sash overlap 18		6-33750-18-0-*
		Sash overlap 20		6-33750-20-0-*
	1 Clamping plate			6-33728-00-0-1
	1 Stay arm bearing axle			6-30874-00-0-6
	1 Bearing sleeve			9-39805-00-0-6
	1 Cover			9-39807-00-0-6
	2 Raised countersunk head screw M 5 x 16			9-13489-16-R-8

[1] * = Colour: 0 = uncoated, 1 = F 1/EV 1, 6 = black (RAL 9005), 7 = white (RAL 9016), 7T = white (RAL 9010)

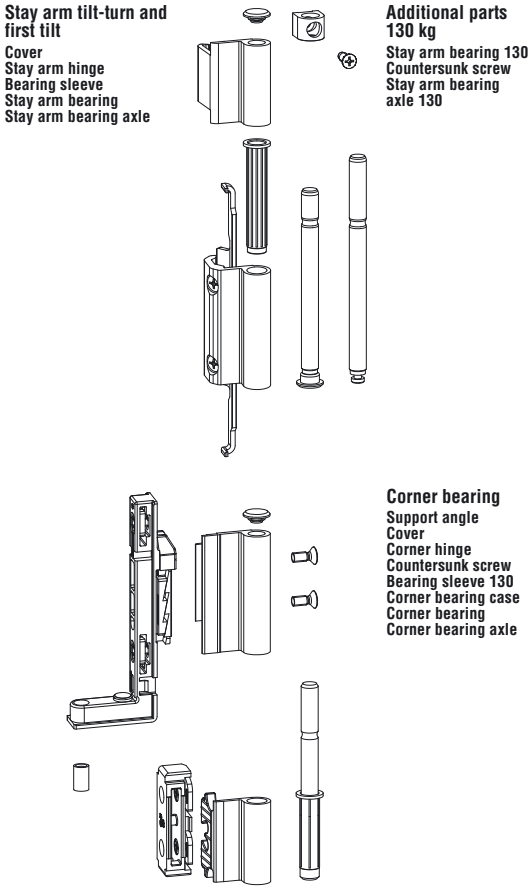

Optional part

Qty.	Description	PU	Article No.
1	**Bag of bearing sleeves/covers light grey** [1] for all bags of hinge side/middle hinge UNI-JET C	1	K-17803-00-0-1
	Contents		
	1 Bearing sleeve		9-39805-00-0-1
	2 Covers		9-39807-00-0-1
	1 Corner bearing sleeve		9-39831-00-0-1
	1 Safety cover		9-39806-00-0-1

[1] * = Colour: 0 = uncoated, 1 = F 1/EV 1, 6 = black (RAL 9005), 7 = white (RAL 9016), 7T = white (RAL 9010)

Working drawing 0-44708

Tilt-turn, first tilt, side hung, inactive and tilt sashes – for sash with plane fitting groove 16 mm

Tilt-turn, first tilt, side hung and inactive sashes

Fitting requirements for schemes A to E

Qty.	Description	PU	Article No.
1	**Stay arm tilt-turn**		
	SRW		
	280- 500	10	6-31518-03-0-1
	501- 750	10	6-31518-06-0-1
	751-1200	10	6-31518-08-0-1
	1201-1600	10	6-31518-12-0-1
1	**Stay arm first tilt**		
	FFB		
	280- 500	10	6-33777-03-0-1
	501- 750	10	6-33777-06-0-1
	751-1200	10	6-33777-08-0-1
	1201-1600	10	6-33777-12-0-1
1	**Side hung sash hinge**	10	6-31519-00-0-1

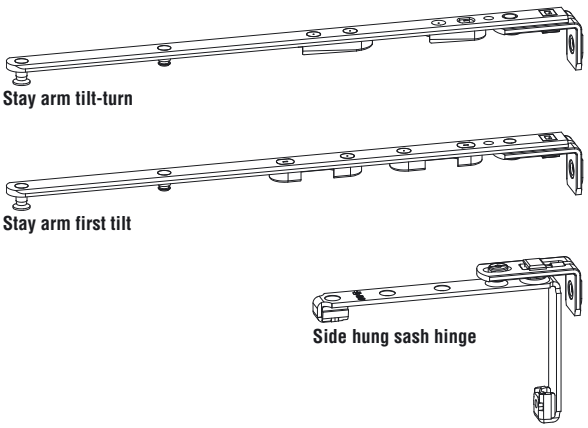

Tilt-turn, first tilt, side hung, inactive and tilt sashes

Fitting requirements for schemes A to E

Qty.	Description		PU	Article No.
1	**Bag of hinge side** [1]			
	for sash with plane fitting groove 16 mm			
	Groove 13	Sash overlap 20	10	K-17128-20-0-*
	Frame groove 14 / 18			
	Groove 13	Sash overlap 18	10	K-17509-18-0-*
	Frame groove 10 / 14	Sash overlap 20	10	K-17509-20-0-*
	Contents			
	1 Stay arm bearing [1]	Sash overlap 18		6-31591-18-0-*
		Sash overlap 20		6-31591-20-0-*
	1 Stay arm bearing axle			6-30874-00-0-6
	1 Stay arm hinge [1]	Sash overlap 18		6-33433-18-0-*
		Sash overlap 20		6-33433-20-0-*
	1 Bearing sleeve			9-39805-00-0-6
	2 Covers			9-39807-00-0-6
	1 Corner bearing [1]	Sash overlap 18		9-39812-00-0-*
		Sash overlap 20		9-43356-00-0-*
	1 Corner bearing case	Frame groove 14/18		6-30872-00-0-1
		Frame groove 10/14		6-32055-00-0-1
	1 Corner bearing axle			6-31087-00-0-6
	1 Corner hinge [1]	Sash overlap 18		6-33432-18-0-*
		Sash overlap 20		6-33432-20-0-*
	1 Support angle			6-33463-00-0-1
	2 Countersunk screws			9-13489-12-R-8
	1 Bearing sleeve 130	Sash weight > 80 kg		9-43545-00-0-1
1	**Bag of additional parts 130 kg** [1]		1	K-16595-00-0-*
	Contents			
	1 Stay arm bearing 130 [1]			9-41710-00-0-*
	1 Stay arm bearing axle 130			9-39809-01-0-6
	1 Countersunk screw M 5 x 16			9-33841-16-R-8
1	**Bag of middle hinge** [1]			
	for sash with plane fitting groove 16 mm			
	Groove 13	Sash overlap 18	10	K-17219-18-0-*
		Sash overlap 20	10	K-17219-20-0-*
	Contents			
	1 Bearing hinge [1]	Sash overlap 18		6-33727-18-0-*
		Sash overlap 20		6-33727-20-0-*
	1 Middle hinge [1]	Sash overlap 18		6-33807-18-0-*
		Sash overlap 20		6-33807-20-0-*
	1 Stay arm bearing axle			6-30874-00-0-6
	1 Bearing sleeve			9-39805-00-0-6
	1 Cover			9-39807-00-0-6
1	**Bag of tilt sash hinge**[1]			
	for sash with plane fitting groove 16 mm			
	Groove 13	Sash overlap 18	10	K-17215-18-0-*
		Sash overlap 20	10	K-17215-20-0-*
	Contents			
	1 Bearing hinge [1]	Sash overlap 18		6-33727-18-0-*
		Sash overlap 20		6-33727-20-0-*
	1 Middle hinge [1]	Sash overlap 18		6-33750-18-0-*
		Sash overlap 20		6-33750-20-0-*
	1 Screw plate			6-33729-00-0-1
	1 Stay arm bearing axle			6-30874-00-0-6
	1 Bearing sleeve			9-39805-00-0-6
	1 Cover			9-39807-00-0-6
	2 Raised countersunk head screw M 5 x 16			9-13489-16-R-8

[1] * = Colour: 0 = uncoated, 1 = F 1/EV 1, 6 = black (RAL 9005), 7 = white (RAL 9016), 7T = white (RAL 9010)

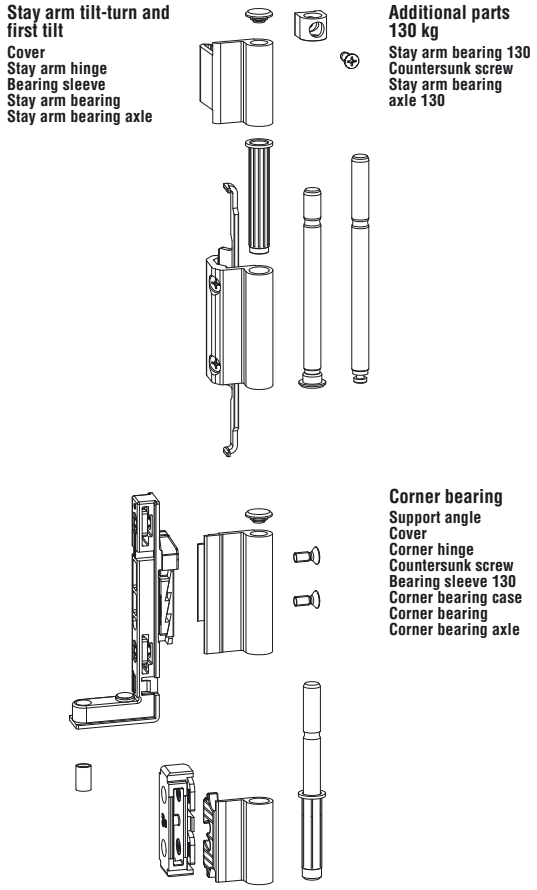

Optional part

Qty.	Description	PU	Article No.
1	**Bag of bearing sleeves/covers light grey** [1]	1	K-17803-00-0-1
	for all bags of hinge side/middle hinge UNI-JET C		
	Contents		
	1 Bearing sleeve		9-39805-00-0-1
	2 Covers		9-39807-00-0-1
	1 Corner bearing sleeve		9-39831-00-0-1
	1 Safety cover		9-39806-00-0-1

[1] * = Colour: 0 = uncoated, 1 = F 1/EV 1, 6 = black (RAL 9005), 7 = white (RAL 9016), 7T = white (RAL 9010)

Working drawing 0-44708

Tilt-turn, side hung, inactive and tilt sashes

Tilt-turn sash

Fitting requirements for schemes A to E

Qty.	Description	PU	Article No.
1	**Stay arm** [2][3]		
	SRW		
	280- 500	10	6-32970-**-*-1
	501- 750	10	6-32971-**-*-1
	751-1200	10	6-32972-**-*-1
	1201-1600	10	6-32973-**-*-1
1	**Stay arm bearing** Ø 3, L = 2,5	100	6-31636-03-0-1
	with supporting pins Ø 6, L = 2,5	100	6-31636-06-0-1
1	**Cover** for stay arm bearing [1]	100	9-41653-00-0-*
1	**Cover** for stay arm hinge [1]	100	9-41695-00-0-*
1	**Rebate corner hinge** without brake [2][3]	100	6-31521-**-*-1
1	**Corner bearing** [1] Ø 3, L = 2,5	100	6-28743-03-0-*
	with supporting pins Ø 6, L = 22	100	6-28742-22-0-*
1	**Cover** for rebate hinge [1][3]	100	9-40487-00-*-*
1	**Cover** for corner bearing [1]	100	9-35461-00-0-*

[1] * Colour: 1 = EV 1, 3 = F 3, 5 = brown (RAL 8022), 6 = black (RAL 9005), 7 = white (RAL 9016), 8 = stainless steel colour
[2] ** Size 18, 20 or 22 according to sash overlap
[3] * L = DIN left, R = DIN right

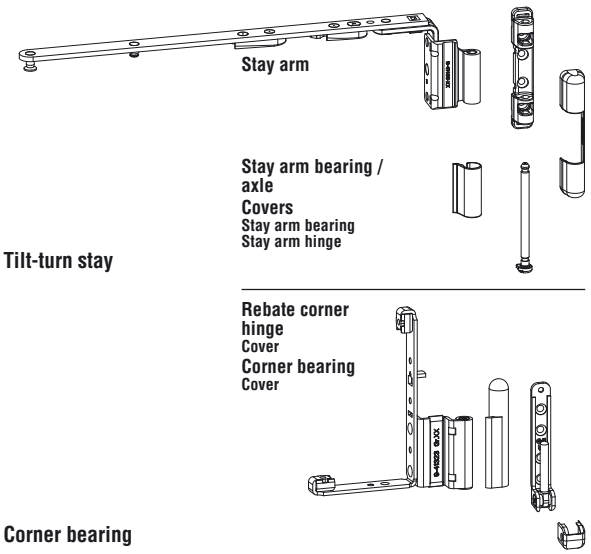

Side hung and inactive sash

Fitting requirements for schemes A to E

Qty.	Description	PU	Article No.
1	**Side hung sash hinge** [2]	100	6-31852-**-0-1
1	**Stay arm bearing** Ø 3, L = 2,5	100	6-31636-03-0-1
	with supporting pins Ø 6, L = 2,5	100	6-31636-06-0-1
1	**Cover** for stay arm bearing [1]	100	9-41653-00-0-*
1	**Cover** for stay arm hinge [1]	100	9-41695-00-0-*
1	**Middle hinge** [2]		
	from SRH 1101 mm	100	6-31854-**-0-1
1	**Stay arm bearing** Ø 3, L = 2,5	100	6-31636-03-0-1
	with supporting pins Ø 6, L = 2,5	100	6-31636-06-0-1
1	**Bag of covers** [1]	20	K-16791-00-0-*
1	**Rebate corner hinge** without brake [2][3]	100	6-31521-**-*-1
1	**Corner bearing** [1] Ø 3, L = 2,5	100	6-28743-03-0-*
	with supporting pins Ø 6, L = 22	100	6-28742-22-0-*
1	**Cover** for rebate hinge [1][3]	100	9-40487-00-*-*
1	**Cover** for corner bearing [1]	100	9-35461-00-0-*

[1] * Colour: 1 = EV 1, 3 = F 3, 5 = brown (RAL 8022), 6 = black (RAL 9005), 7 = white (RAL 9016), 8 = stainless steel colour
[2] ** Size 18, 20 or 22 according to sash overlap
[3] * L = DIN left, R = DIN right

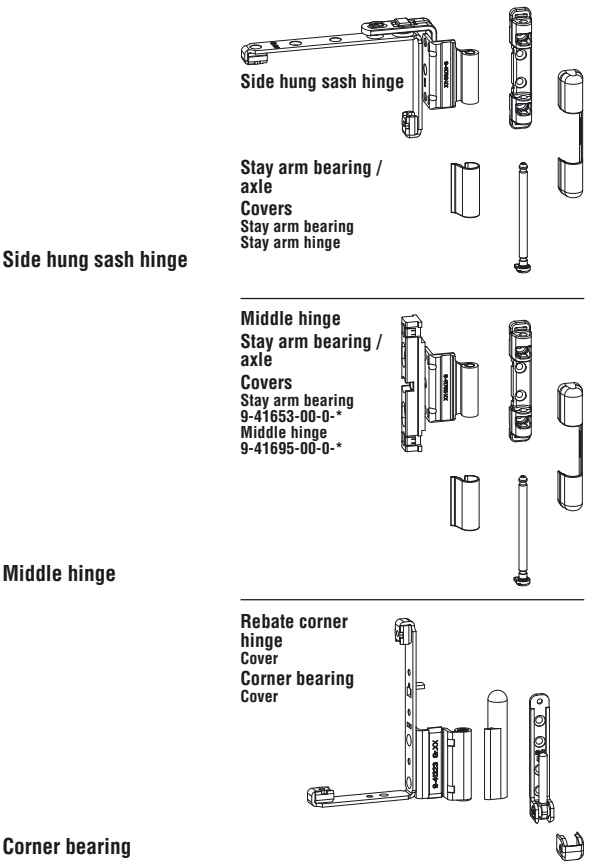

Tilt sash

Fitting requirements

Qty.	Description	PU	Article No.
	Tilt sash hinge [2]	100	6-31847-**-0-1
	Stay arm bearing Ø 3, L = 2,5	100	6-31636-03-0-1
	with supporting pins Ø 6, L = 2,5	100	6-31636-06-0-1
	Bag of covers [1]	20	K-16791-00-0-*
	SRW		
2	591-1200		
3	1201-1950		

[1] * Colour: 1 = EV 1, 3 = F 3, 5 = brown (RAL 8022), 6 = black (RAL 9005), 7 = white (RAL 9016), 8 = stainless steel colour
[2] ** Size 18, 20 or 22 according to sash overlap

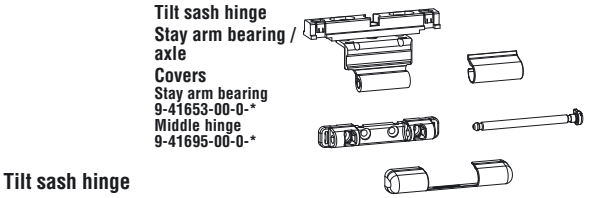

Tilt-turn, side hung, inactive and tilt sashes

Tilt-turn sash

Fitting requirements for schemes A to E

Qty.	Description	PU	Article No.
1	**Stay arm** [2][3]		
	SRW		
	280- 500	10	6-34185-**-*-1
	501- 750	10	6-34186-**-*-1
	751-1200	10	6-34187-**-*-1
	1201-1600	10	6-34188-**-*-1
1	**Stay arm bearing** Ø 3, L = 2,5	100	6-31636-03-0-1
	with supporting pins Ø 6, L = 2,5	100	6-31636-06-0-1
1	**Cover** for stay arm bearing [1]	100	9-41653-00-0-*
1	**Cover** for stay arm hinge [1]	100	9-41695-00-0-*
1	**Rebate corner hinge** without brake [2][3]	100	6-31522-**-*-1
1	**Corner bearing** [1] Ø 3, L = 2,5	100	6-28743-03-0-*
	with supporting pins Ø 6, L = 22	100	6-28742-22-0-*
1	**Cover** for rebate hinge [1][3]	100	9-40487-00-*-*
1	**Cover** for corner bearing [1]	100	9-35461-00-0-*

[1] * Colour: 1 = EV 1, 3 = F 3, 5 = brown (RAL 8022), 6 = black (RAL 9005), 7 = white (RAL 9016), 8 = stainless steel colour
[2] ** Size 18, 20 or 22 according to sash overlap
[3] * L = DIN left, R = DIN right

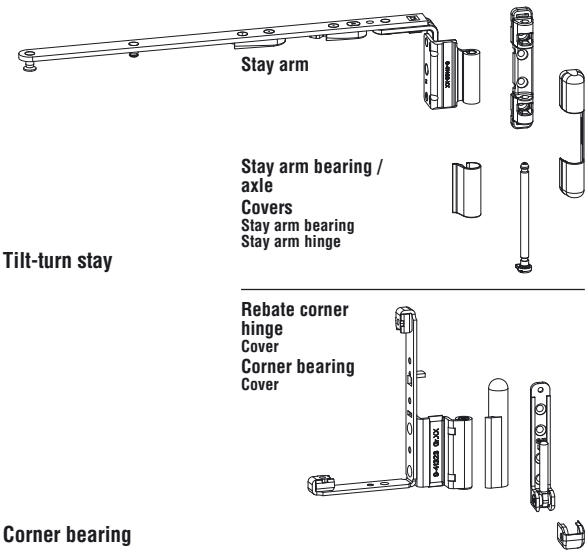

Side hung and inactive sash

Fitting requirements for schemes A to E

Qty.	Description	PU	Article No.
1	**Side hung sash hinge** [2]	100	6-31853-**-0-1
1	**Stay arm bearing** Ø 3, L = 2,5	100	6-31636-03-0-1
	with supporting pins Ø 6, L = 2,5	100	6-31636-06-0-1
1	**Cover** for stay arm bearing [1]	100	9-41653-00-0-*
1	**Cover** for stay arm hinge [1]	100	9-41695-00-0-*
1	**Middle hinge** [2]		
	from SRH 1101 mm	100	6-31855-**-0-1
1	**Stay arm bearing** Ø 3, L = 2,5	100	6-31636-03-0-1
	with supporting pins Ø 6, L = 2,5	100	6-31636-06-0-1
1	**Bag of covers** [1]	20	K-16791-00-0-*
1	**Rebate corner hinge** without brake [2][3]	100	6-31522-**-*-1
1	**Corner bearing** [1] Ø 3, L = 2,5	100	6-28743-03-0-*
	with supporting pins Ø 6, L = 22	100	6-28742-22-0-*
1	**Cover** for rebate hinge [1][3]	100	9-40487-00-*-*
1	**Cover** for corner bearing [1]	100	9-35461-00-0-*

[1] * Colour: 1 = EV 1, 3 = F 3, 5 = brown (RAL 8022), 6 = black (RAL 9005), 7 = white (RAL 9016), 8 = stainless steel colour
[2] ** Size 18, 20 or 22 according to sash overlap
[3] * L = DIN left, R = DIN right

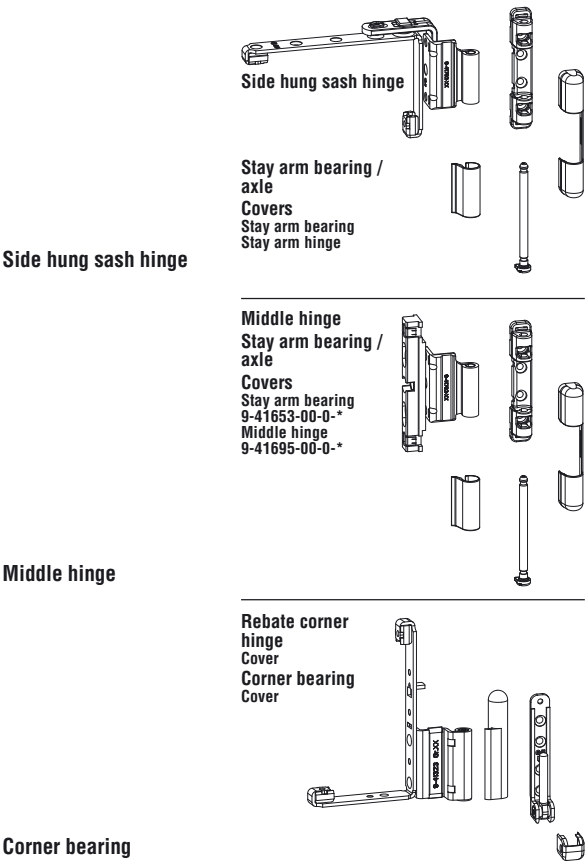

Tilt sash

Fitting requirements

Qty.	Description	PU	Article No.
	Tilt sash hinge [2]	100	6-31848-**-0-1
	Stay arm bearing Ø 3, L = 2,5	100	6-31636-03-0-1
	with supporting pins Ø 6, L = 2,5	100	6-31636-06-0-1
	Bag of covers [1]	20	K-16791-00-0-*
	SRW		
2	591-1200		
3	1201-1950		

[1] * Colour: 1 = EV 1, 3 = F 3, 5 = brown (RAL 8022), 6 = black (RAL 9005), 7 = white (RAL 9016), 8 = stainless steel colour
[2] ** Size 18, 20 or 22 according to sash overlap

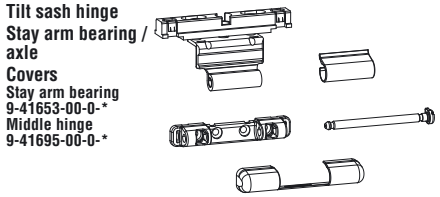

Optional parts for hinge side UNI-JET D

Description	PU	Article No. DIN left	DIN right
Axle	10	6-31840-00-0-1	6-31840-00-0-1
Screw hole cover [1]	100	9-41874-00-0-*	9-41874-00-0-*
Rebate corner hinge [2] Groove 9	100	6-28740-**-L-1	6-28740-**-R-1
with brake Groove 13	100	6-28741-**-L-1	6-28741-**-R-1
Cover for rebate hinge [1]	100	9-37725-00-L-*	9-37725-00-R-*
Cover for rebate corner hinge [1]	100	9-42796-00-0-*	9-42796-00-0-*

[1] * Colour: 1 = EV 1, 5 = brown (RAL 8022), 7 = white (RAL 9016)
[2] ** Size 18, 20 or 22 according to sash overlap

Axle

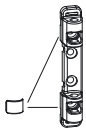

Screw hole cover [1]

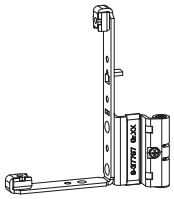

Rebate corner hinge with brake [2]

Cover – rebate hinge [1]

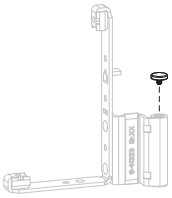

Cover for rebate corner hinge [1]

Fixed and variable gear position, backset 25 – 50 mm

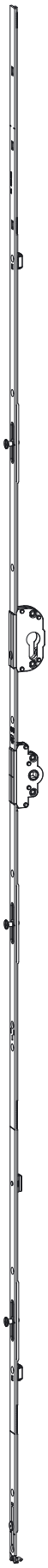

Gear AP 25 GK – AP 50 GK

Gear AP 25 GV – AP 50 GV

Gear AP 25 GK – AP 50 GK

Description				PU	Article No.
Gear AP 25 GK, lockable					
Backset 25, fixed gear position					
SRH	Forend	G	ML		
1851-2100	1940	980	3	10	G-22315-25-0-1
2101-2350	2190	980	4	10	G-22316-25-0-1
Gear AP 30 GK, lockable					
Backset 30, fixed gear position					
SRH	Forend	G	ML		
1851-2100	1940	980	3	10	G-22315-30-0-1
2101-2350	2190	980	4	10	G-22316-30-0-1
Gear AP 35 GK, lockable					
Backset 35, fixed gear position					
SRH	Forend	G	ML		
1851-2100	1940	980	3	10	G-22315-35-0-1
2101-2350	2190	980	4	10	G-22316-35-0-1
Gear AP 40 GK, lockable					
Backset 40, fixed gear position					
SRH	Forend	G	ML		
1851-2100	1940	980	3	10	G-22315-40-0-1
2101-2350	2190	980	4	10	G-22316-40-0-1
Gear AP 45 GK, lockable					
Backset 45, fixed gear position					
SRH	Forend	G	ML		
1851-2100	1940	980	3	10	G-22315-45-0-1
2101-2350	2190	980	4	10	G-22316-45-0-1
Gear AP 50 GK, lockable					
Backset 50, fixed gear position					
SRH	Forend	G	ML		
1851-2100	1940	980	3	10	G-22315-50-0-1
2101-2350	2190	980	4	10	G-22316-50-0-1

Gear AP 25 GV – AP 50 GV

Description				PU	Article No.
Gear AP 25 GV, lockable					
Backset 25, variable gear position					
SRH	Forend	GV	ML		
951-1450	1130	475- 725	1	10	G-22330-25-0-1
1451-1950	1630	725- 975	2	10	G-22331-25-0-1
1951-2450	2130	975-1225	3	10	G-22332-25-0-1
Gear AP 30 GV, lockable					
Backset 30, variable gear position					
SRH	Forend	GV	ML		
951-1450	1130	475- 725	1	10	G-22330-30-0-1
1451-1950	1630	725- 975	2	10	G-22331-30-0-1
1951-2450	2130	975-1225	3	10	G-22332-30-0-1
Gear AP 35 GV, lockable					
Backset 35, variable gear position					
SRH	Forend	GV	ML		
951-1450	1130	475- 725	1	10	G-22330-35-0-1
1451-1950	1630	725- 975	2	10	G-22331-35-0-1
1951-2450	2130	975-1225	3	10	G-22332-35-0-1
Gear AP 40 GV, lockable					
Backset 40, variable gear position					
SRH	Forend	GV	ML		
951-1450	1130	475- 725	1	10	G-22330-40-0-1
1451-1950	1630	725- 975	2	10	G-22331-40-0-1
1951-2450	2130	975-1225	3	10	G-22332-40-0-1
Gear AP 45 GV, lockable					
Backset 45, variable gear position					
SRH	Forend	GV	ML		
951-1450	1130	475- 725	1	10	G-22330-45-0-1
1451-1950	1630	725- 975	2	10	G-22331-45-0-1
1951-2450	2130	975-1225	3	10	G-22332-45-0-1
Gear AP 50 GV, lockable					
Backset 50, variable gear position					
SRH	Forend	GV	ML		
951-1450	1130	475- 725	1	10	G-22330-50-0-1
1451-1950	1630	725- 975	2	10	G-22331-50-0-1
1951-2450	2130	975-1225	3	10	G-22332-50-0-1

Fixed gear position, backset 25 – 50 mm

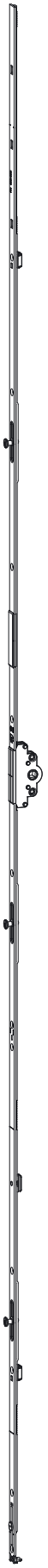

Gear 25 GK – 50 GK

Gear 25 GK – 50 GK

Description				PU	Article No.
Gear 25 GK, non-lockable					
Backset 25, fixed gear position					
SRH	Forend	G	ML		
851-1100	940	400	1	10	G-22790-25-0-1
1101-1350	1190	500	1	10	G-22791-25-0-1
1351-1600	1440	600	2	10	G-22792-25-0-1
1601-1850	1690	600	3	10	G-22793-25-0-1
1851-2100	1940	980	3	10	G-22321-25-0-1
2101-2350	2190	980	4	10	G-22322-25-0-1
Gear 30 GK, non-lockable					
Backset 30, fixed gear position					
SRH	Forend	G	ML		
851-1100	940	400	1	10	G-22790-30-0-1
1101-1350	1190	500	1	10	G-22791-30-0-1
1351-1600	1440	600	2	10	G-22792-30-0-1
1601-1850	1690	600	3	10	G-22793-30-0-1
1851-2100	1940	980	3	10	G-22321-30-0-1
2101-2350	2190	980	4	10	G-22322-30-0-1
Gear 35 GK, non-lockable					
Backset 35, fixed gear position					
SRH	Forend	G	ML		
851-1100	940	400	1	10	G-22790-35-0-1
1101-1350	1190	500	1	10	G-22791-35-0-1
1351-1600	1440	600	2	10	G-22792-35-0-1
1601-1850	1690	600	3	10	G-22793-35-0-1
1851-2100	1940	980	3	10	G-22321-35-0-1
2101-2350	2190	980	4	10	G-22322-35-0-1
Gear 40 GK, non-lockable					
Backset 40, fixed gear position					
SRH	Forend	G	ML		
851-1100	940	400	1	10	G-22790-40-0-1
1101-1350	1190	500	1	10	G-22791-40-0-1
1351-1600	1440	600	2	10	G-22792-40-0-1
1601-1850	1690	600	3	10	G-22793-40-0-1
1851-2100	1940	980	3	10	G-22321-40-0-1
2101-2350	2190	980	4	10	G-22322-40-0-1
Gear 45 GK, non-lockable					
Backset 45, fixed gear position					
SRH	Forend	G	ML		
851-1100	940	400	1	10	G-22790-45-0-1
1101-1350	1190	500	1	10	G-22791-45-0-1
1351-1600	1440	600	2	10	G-22792-45-0-1
1601-1850	1690	600	3	10	G-22793-45-0-1
1851-2100	1940	980	3	10	G-22321-45-0-1
2101-2350	2190	980	4	10	G-22322-45-0-1
Gear 50 GK, non-lockable					
Backset 50, fixed gear position					
SRH	Forend	G	ML		
851-1100	940	400	1	10	G-22790-50-0-1
1101-1350	1190	500	1	10	G-22791-50-0-1
1351-1600	1440	600	2	10	G-22792-50-0-1
1601-1850	1690	600	3	10	G-22793-50-0-1
1851-2100	1940	980	3	10	G-22321-50-0-1
2101-2350	2190	980	4	10	G-22322-50-0-1

Gear 25 GK – 50 GK

Gear 25 GV – 50 GV, non-lockable

Variable gear position, backset 25 – 50 mm

Gear 25 GV – 50 GV

Gear 25 GV – 50 GV

Description				PU	Article No.
Gear 25 GV, non-lockable					
Backset 25, variable gear position					
SRH	Forend	GV	ML		
576- 950	630	288- 475		10	G-22343-25-0-1
951-1450	1130	475- 725	1	10	G-22344-25-0-1
1451-1950	1630	725- 975	2	10	G-22345-25-0-1
1951-2450	2130	975-1225	3	10	G-22346-25-0-1
Gear 30 GV, non-lockable					
Backset 30, variable gear position					
SRH	Forend	GV	ML		
576- 950	630	288- 475		10	G-22343-30-0-1
951-1450	1130	475- 725	1	10	G-22344-30-0-1
1451-1950	1630	725- 975	2	10	G-22345-30-0-1
1951-2450	2130	975-1225	3	10	G-22346-30-0-1
Gear 35 GV, non-lockable					
Backset 35, variable gear position					
SRH	Forend	GV	ML		
576- 950	630	288- 475		10	G-22343-35-0-1
951-1450	1130	475- 725	1	10	G-22344-35-0-1
1451-1950	1630	725- 975	2	10	G-22345-35-0-1
1951-2450	2130	975-1225	3	10	G-22346-35-0-1
Gear 40 GV, non-lockable					
Backset 40, variable gear position					
SRH	Forend	GV	ML		
576- 950	630	288- 475		10	G-22343-40-0-1
951-1450	1130	475- 725	1	10	G-22344-40-0-1
1451-1950	1630	725- 975	2	10	G-22345-40-0-1
1951-2450	2130	975-1225	3	10	G-22346-40-0-1
Gear 45 GV, non-lockable					
Backset 45, variable gear position					
SRH	Forend	GV	ML		
576- 950	630	288- 475		10	G-22343-45-0-1
951-1450	1130	475- 725	1	10	G-22344-45-0-1
1451-1950	1630	725- 975	2	10	G-22345-45-0-1
1951-2450	2130	975-1225	3	10	G-22346-45-0-1
Gear 50 GV, non-lockable					
Backset 50, variable gear position					
SRH	Forend	GV	ML		
576- 950	630	288- 475		10	G-22343-50-0-1
951-1450	1130	475- 725	1	10	G-22344-50-0-1
1451-1950	1630	725- 975	2	10	G-22345-50-0-1
1951-2450	2130	975-1225	3	10	G-22346-50-0-1

Fixed gear position, backset 30 mm

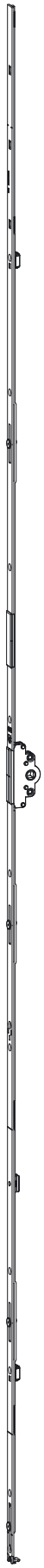

Inactive sash gear 30 GK

Inactive sash gear 30 GK

Description			PU	Article No.
Inactive sash gear 30 GK, non-lockable				
Backset 30, fixed gear position				
SRH	Forend	G		
551- 720	560	200	10	G-22190-00-0-1
721- 850	690	250	10	G-22191-00-0-1
851-1100	940	400	10	G-22192-00-0-1
1101-1350	1190	500	10	G-22193-00-0-1
1351-1600	1440	600	10	G-22194-00-0-1
1601-1850	1690	600	10	G-22195-00-0-1
1851-2100	1940	980	10	G-22196-00-0-1
2101-2350	2190	980	10	G-22197-00-0-1

Inactive sash gear 30 GK

UNI-JET C and D

Application	Description	PU	Article No.
Assembly of stay arm bearing 130 kg	**Tilt-turn, first tilt, side hung and tilt sash fittings**		
UNI-JET C 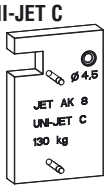	Drilling and mounting jig for stay arm bearing 130 kg 9-41710-00-0-1		
	Sash overlap 18 mm	1	6-31951-00-0-6
	Sash overlap 20 mm	1	6-33776-00-0-6
Assembly of corner and stay arm bearings	Drilling jig for corner bearing and stay arm bearing, drill Ø 3 mm	1	6-27412-03-0-0
UNI-JET D	Drilling jig for corner bearing and stay arm bearing, drill Ø 3 and 6 mm	1	6-27412-53-0-0
Assembly of locking plates UNI-JET C and D	1 set of positioning jigs for locking plates, fixed gear position length of locking plate 55 mm	1	6-32644-00-0-0
	1 set of positioning jigs for locking plates, variable gear position length of locking plate 55 mm	1	6-32645-00-0-0
Assembly of turn handles UNI-JET C and D	Drilling jig for turn handle	1	6-22459-00-0-0
	Stop for 6-22459 – fixed gear position	1	9-27406-00-0-1
	Drilling jig with stop for gear AP 25 up to AP 50	1	6-25156-00-0-9

Product group

T **Turn handles**

Contents

silver

champagne

gold

light brown

dark brown

white

titanium painted

Colours

The turn handles DIRIGENT, ADAGIO, MODENA, SOPRANO and SAN REMO are made from aluminium with painted or powder coated finish. The handles are available in the following standard colours (with matching rosettes):

- F 1/EV 1, silver
- F 2/EV 2, champagne
- F 3, gold
- F 4, light brown
- dark brown (RAL 8022 matt)
- white (RAL 9016)
- titanium painted

Illustration: handle type DIRIGENT

Available colours	Standard types Quantities				
	DIRIGENT	ADAGIO	MODENA	SOPRANO	SAN REMO
silver	20	20	100*	20	20
champagne	20	20	20	–	20
gold colour	20	20	20	–	20
light brown	20	20	20	–	20
dark brown	20	20	20	20	20
white	20	100*	100*	20	20
titanium	20	20	20	–	20

*Packing unit (lockable types: PU = 20)

Example:
Order number 6-28072-29-0-7

6-28072-				= Article number
-	-00	-	-	= without spindle
-	-29	-	-	= spindle length 29 mm
-	-33	-	-	= spindle length 33 mm
-	-38	-	-	= spindle length 38 mm
-	-43	-	-	= spindle length 43 mm
-	-	-0	-	= usable on both sides
-	-	-L	-	= DIN left
-	-	-R	-	= DIN right
-	-	-	-11	= F 1/EV 1, silver
-	-	-	-22	= F 2/EV 2, champagne
-	-	-	-3	= F 3, gold colour
-	-	-	-A	= F 4, light brown
-	-	-	-5	= dark brown (RAL 8022)
-	-	-	-7	= white (RAL 9016)
-	-	-	-C	= titanium painted

Turn handles for windows

The turn handles DIRIGENT captivate by their clear shape. Elegance and functionality are the main features of the DIRIGENT design.

The programme comprises inside and outside handles made from aluminium for timber, PVC and aluminium windows and balcony doors.

DIRIGENT-F DIRIGENT-F/Z

Standard types

Description	Variant	Order number
DIRIGENT-F	inside [1]	6-28072-* *-0-*
DIRIGENT-F/Z	inside, with locking cylinder [1]	6-28075-* *-0-*
DIRIGENT-F/F	inside, flat	6-28101-00-0-*
DIRIGENT-F/H	inside, high	6-28102-00-0-*
DIRIGENT-F/A	outside	6-25993-00-0-*

[1] also without spindle

Special types

Description	Variant	Order number
DIRIGENT-F/SP	inside, 45° stop	6-28094-* *-0-*
DIRIGENT-F/KD	inside, with childproof safety button	6-30268-* *-0-*
DIRIGENT-F/CHK	inside,	
	with Swiss type night lock	6-28096-00-0-*
DIRIGENT-F/SG	inside, removable	8-00694-50-0-7
DIRIGENT first tilt	inside, first tilt,	6-25993-00-0-*
	lockable	6-31557-* *-0-*
DIRIGENT-F/AF	outside, flat	6-25223-00-0-*

Cranked inside handles for outward opening windows and balcony doors (side hung)

Description	Variant	Order number
DIRIGENT-F/GF-LS	crank for DIN left, flat	6-28105-00-0-*
DIRIGENT-F/GF-RS	crank for DIN right, flat	6-28106-00-0-*

Cranked outside handles for inward opening windows and balcony doors (side hung)

Description	Variant	Order number
DIRIGENT-F/AGF-LS	crank for DIN left, flat	6-27350-00-0-*
DIRIGENT-F/AGF-RS	crank for DIN right, flat	6-27349-00-0-*

* Spindle length and colours see page 3.3

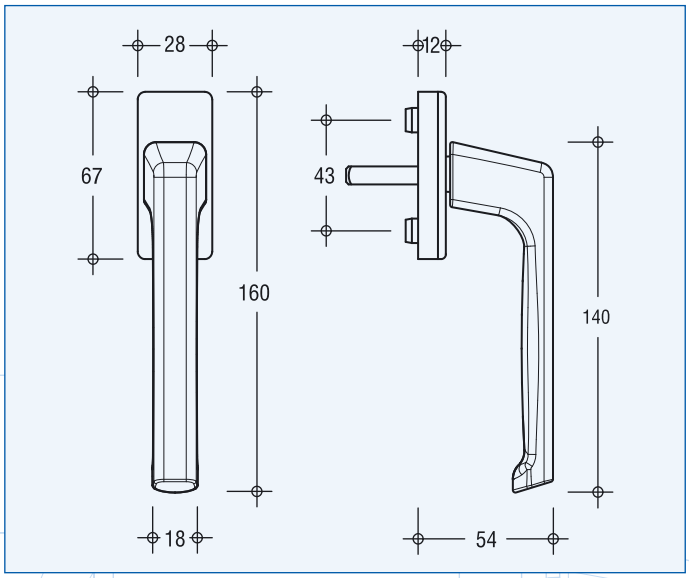

DIRIGENT-F, DIRIGENT-F/SP

Technical data

Inside rosette	28 x 67 mm
Detent	90° or 90° and 45° with F/SP
Positioning plugs	Ø 10 mm
Length of pos. plugs	5 mm
Square spindle	fixed, 7 x 29, 7 x 33, 7 x 38 or 7 x 43 mm
Differ	F/Z keyed alike
Rosette cover	turnable
Fixing	concealed

Dimensions of special types

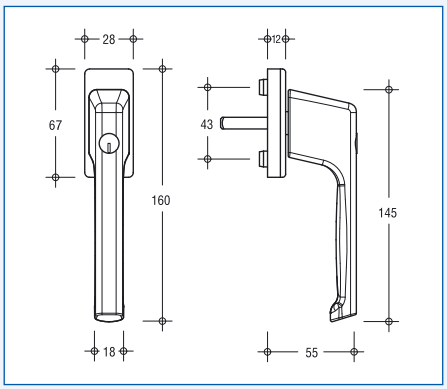

DIRIGENT-F/Z

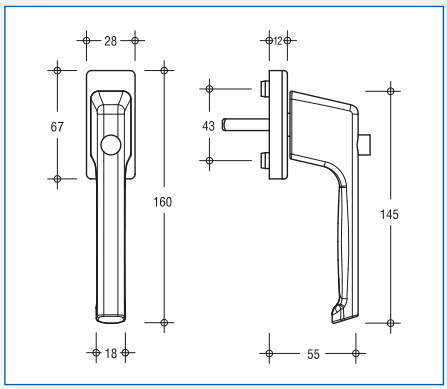

DIRIGENT-F/KD

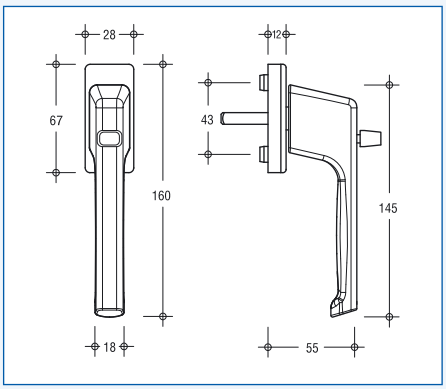

DIRIGENT-F/CHK

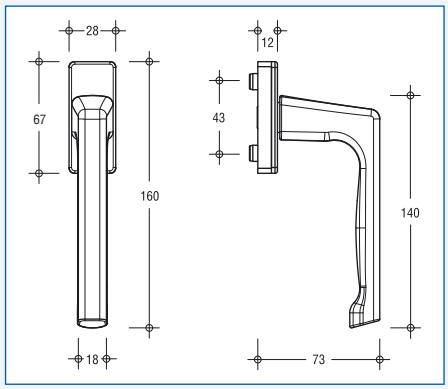

DIRIGENT-F/H

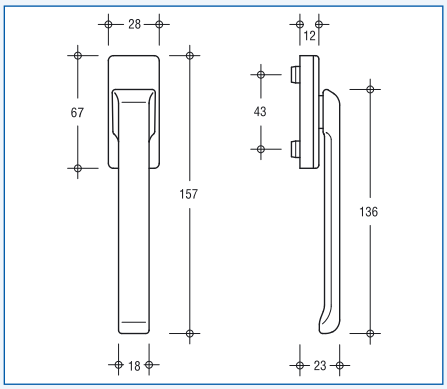

DIRIGENT-F/F

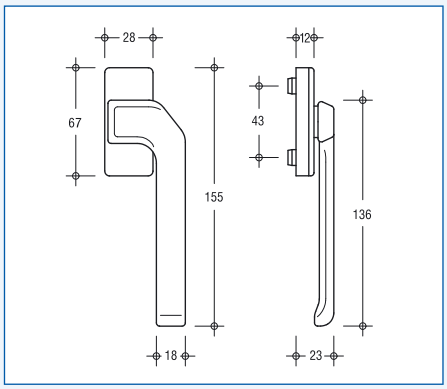

DIRIGENT-F/GF (illustrated: DIN left)

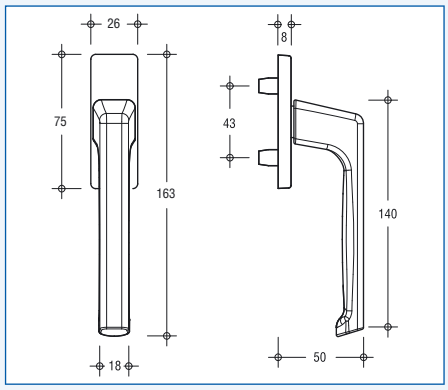

DIRIGENT-F/A

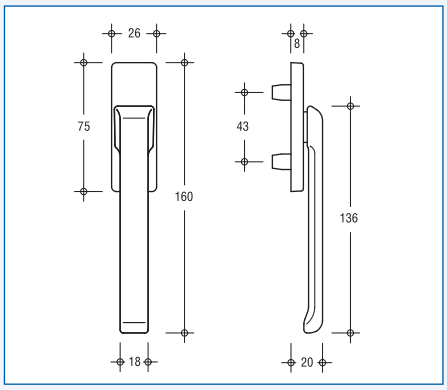

DIRIGENT-F/AF

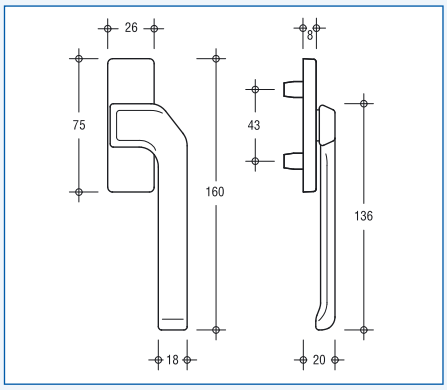

DIRIGENT-F/AGF (illustrated: DIN left)

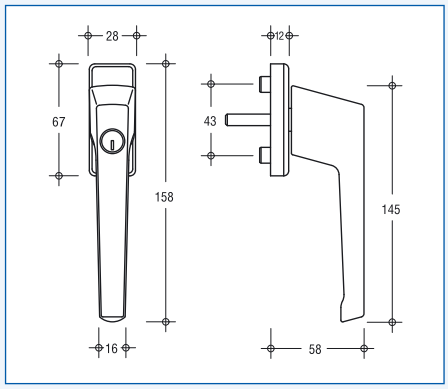

DIRIGENT first tilt

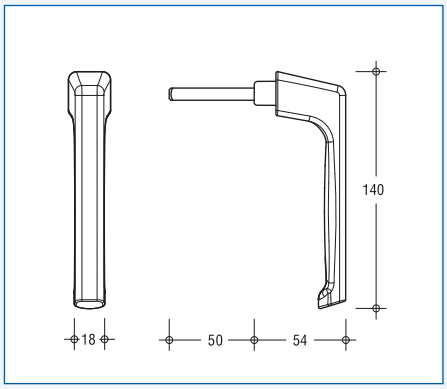

DIRIGENT-F/SG

Turn handles for windows

Round and soft shapes are the dominant features of the ADAGIO window handle design. They are operated with ease and feel comfortable.

The programme comprises handles made from aluminium for timber, PVC and aluminium windows and balcony doors.

Standard types		
Description	Variant	Order number
ADAGIO-F	inside [1]	6-29548-* *-0-*
ADAGIO-F/Z	inside, with locking cylinder	6-29549-* *-0-*

[1] also without spindle

Special types		
Description	Variant	Order number
ADAGIO-F/KD	inside, with childproof safety button	6-29890-* *-0-*
ADAGIO-F/SP	inside, 45° stop	6-31803-* *-0-*

Cranked inside handles for outward opening windows and balcony doors (side hung)		
Description	Variant	Order number
ADAGIO-F/G-LS	crank DIN left, square rosette	6-31323-00-0-*
ADAGIO-F/G-RS	crank DIN right, square rosette	6-31221-00-0-*
ADAGIO-F/G-LS	crank DIN left, round rosette	6-33636-00-0-*
ADAGIO-F/G-RS	crank DIN right, round rosette	6-33637-00-0-*
ADAGIO-F/G 24-LS	crank DIN left, round rosette	6-31441-38-0-*
ADAGIO-F/G 24-RS	crank DIN right, round rosette	6-31442-38-0-*
ADAGIO-F/GZ-LS	crank DIN left, round rosette	6-33451-00-0-*
ADAGIO-F/GZ-RS with looking cylinder	crank DIN right, round rosette	6-33452-00-0-*

Cranked outside handles for inward opening windows and balcony doors (side hung)		
Description	Variant	Order number
ADAGIO-F/AG-LS	crank DIN left, square rosette	6-32411-00-0-*
ADAGIO-F/AG-RS	crank DIN right, square rosette	6-32412-00-0-*
ADAGIO-F/AG-LS	crank DIN left, round rosette	6-33634-00-0-*
ADAGIO-F/AG-RS	crank DIN right, round rosette	6-33635-00-0-*

* Spindle length and colours see page 3.3

Technical data

Inside rosette	28 x 67 mm (rounded)
Detent	90° or 90° and 45° F/SP
Positioning plugs	Ø 10 mm
Length of pos. plugs	5 mm
Square spindle	fixed, 7 x 29, 7 x 33, 7 x 38 or 7 x 43 mm
Differ	F/Z keyed alike
Rosette cover	turnable
Fixing	concealed

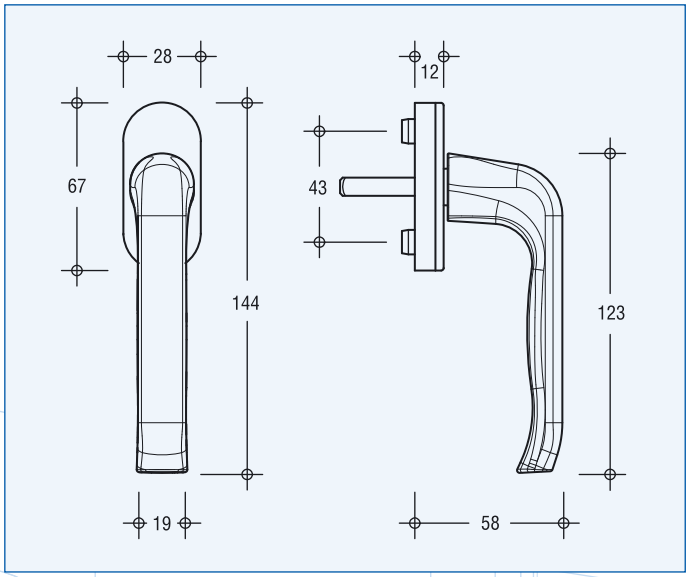

ADAGIO-F, ADAGIO-F/SP

Dimensions of special types

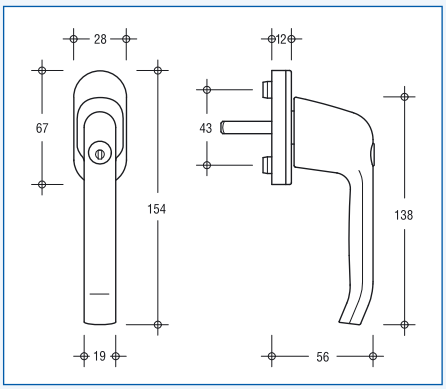

ADAGIO-F/Z

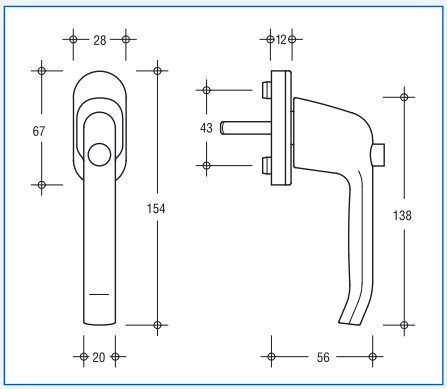

ADAGIO-F/KD

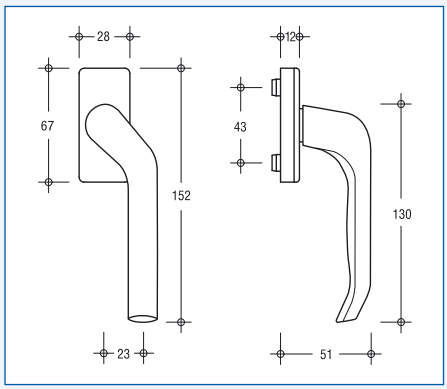

ADAGIO-F/G (illustrated: DIN left)

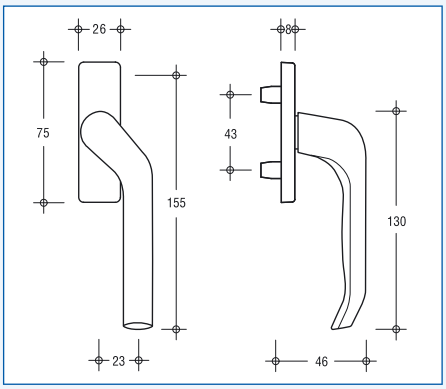

ADAGIO-F/AG (illustrated: DIN left)

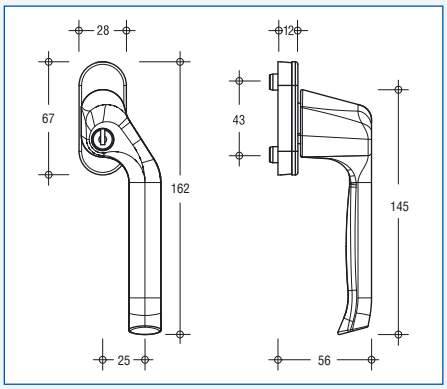

ADAGIO-F/GZ (illustrated: DIN left)

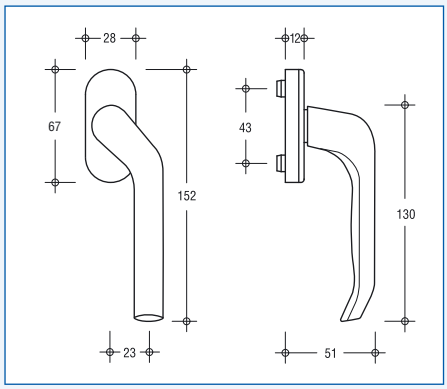

ADAGIO-F/G (illustrated: DIN left)

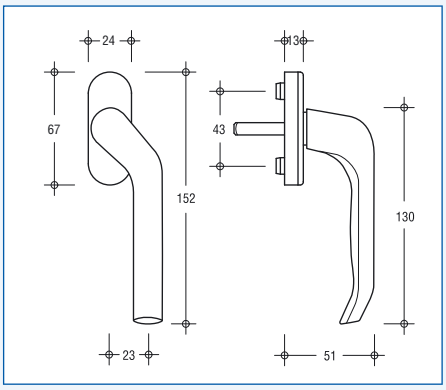

ADAGIO-F/G 24 (illustrated: DIN left)

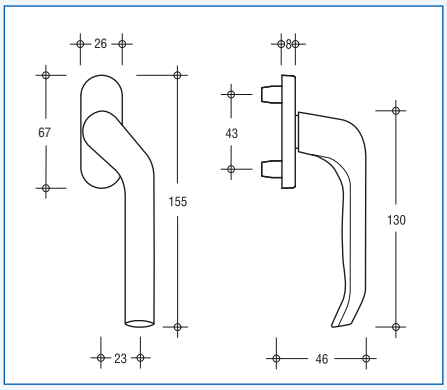

ADAGIO-F/AG (illustrated: DIN left)

Turn handles for windows

The aesthetic design of the MODENA window handles is characterised by its rounded shape. Great ease of use is guaranteed.

The programme comprises inside handles made from aluminium for timber, PVC and aluminum windows and balcony doors.

MODENA-F MODENA-F/Z

Standard types

Description	Variant	Order number
MODENA-F	inside	6-31977-* *-0-*
MODENA-F/Z	inside, with locking cylinder	6-31978-* *-0-*

Special types

Description	Variant	Order number
MODENA-F/SP	inside, 45° stop	6-32319-* *-0-*
MODENA-F/Z 100 Nm [1]	inside, with locking cylinder	6-34397-* *-0-*

* Spindle length and colours see page 3.3

[1] Tested to ENV 1627 against tear-off and twist-off with 100 Nm

Technical data

Inside rosette	28 x 67 mm
Detent	90° or 90° and 45° F/SP
Positioning plugs	Ø 10 mm
Length of pos. plugs	5 mm
Square spindle	fixed, 7 x 29, 7 x 33 or 7 x 38 mm
Differ	F/Z keyed alike
Rosette cover	turnable
Fixing	concealed

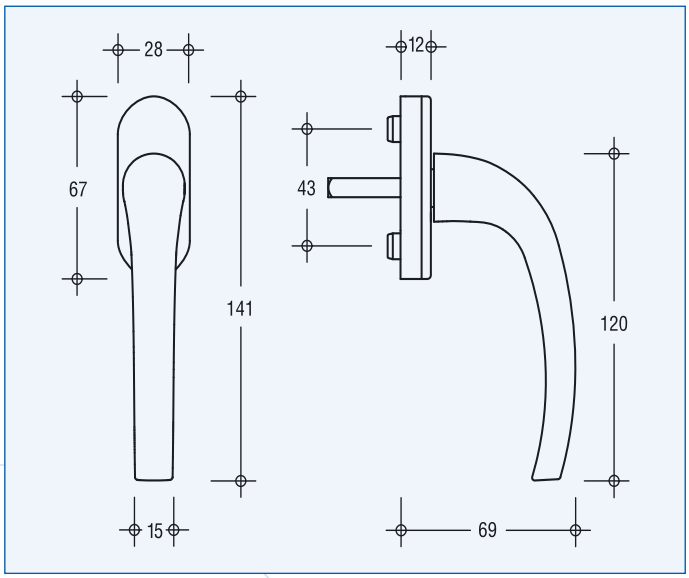

MODENA-F, MODENA-F/SP

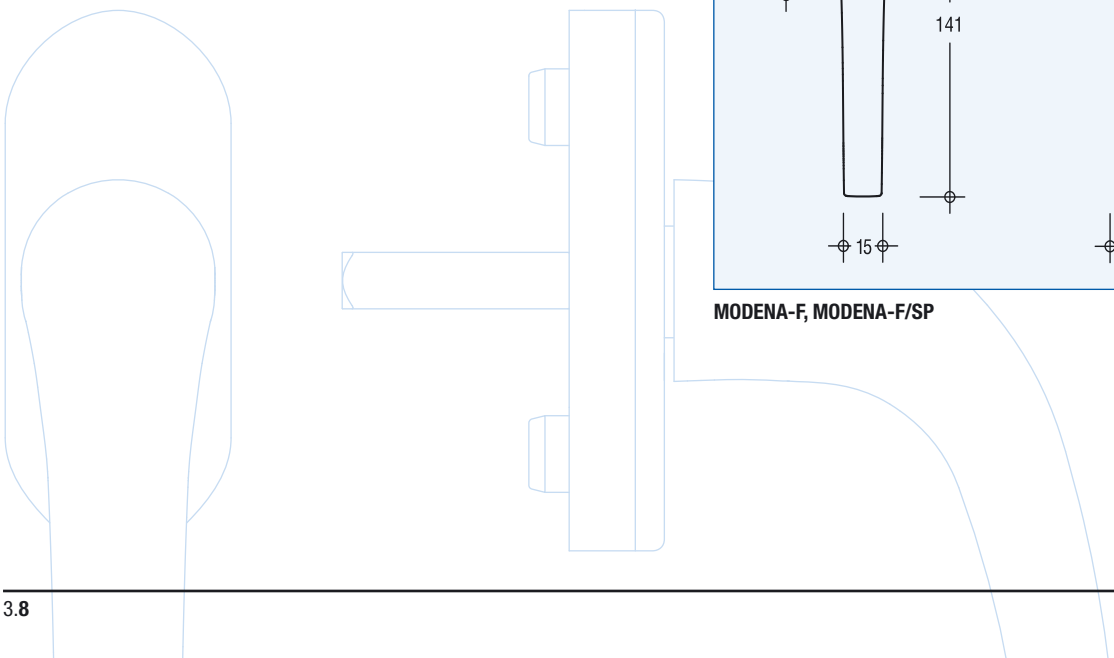

Turn handles for windows

The range of window handles is rounded off by the modernly designed SOPRANO model. The handle is ergonomically shaped and captures by its simple elegance.

Variants : interior handles of aluminium for timber, PVC and aluminium windows and patio doors.

Standard variants		
Description	Variant	Order no.
SOPRANO-F	inside	U-71984-* *-0-*
SOPRANO-F/Z	inside, with locking cylinder	U-71987-* *-0-*

Special variant		
Description	Variant	Order no.
SOPRANO-F/SP	interior, with 45° detent	U-71970-* *-0-*

Colours: silver, brown (RAL 8022 matt), white (RAL 9016)
Order references: * = finish, ** = spindle length
**Spindle length see page 3.3

Technical data

Inside rosette	28 x 64 mm
Detent	90°; 90° and 45° F/SP
Positioning plugs	Ø 10 mm
Length of pos. plugs	5 mm
Square spindle	fixed, 7 x 29, 7 x 33 or 7 x 38 mm
Differ	F/Z keyed alike
Rosette cover	turnable
Fixings	concealed

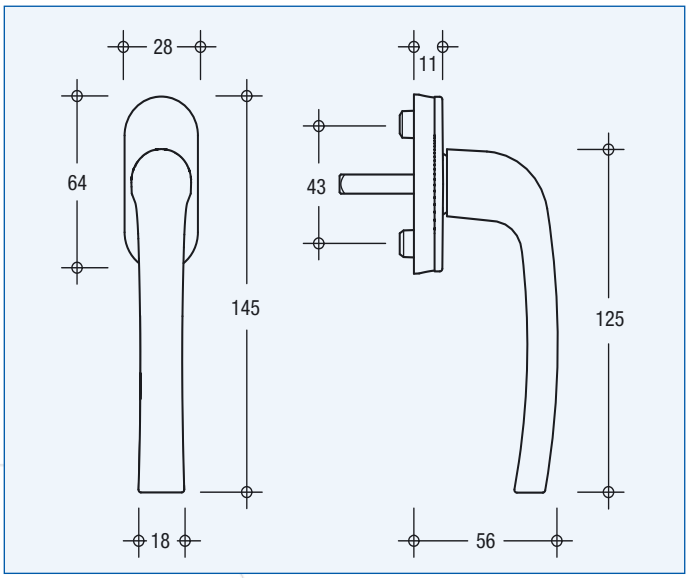

SOPRANO-F, SOPRANO-F/SP

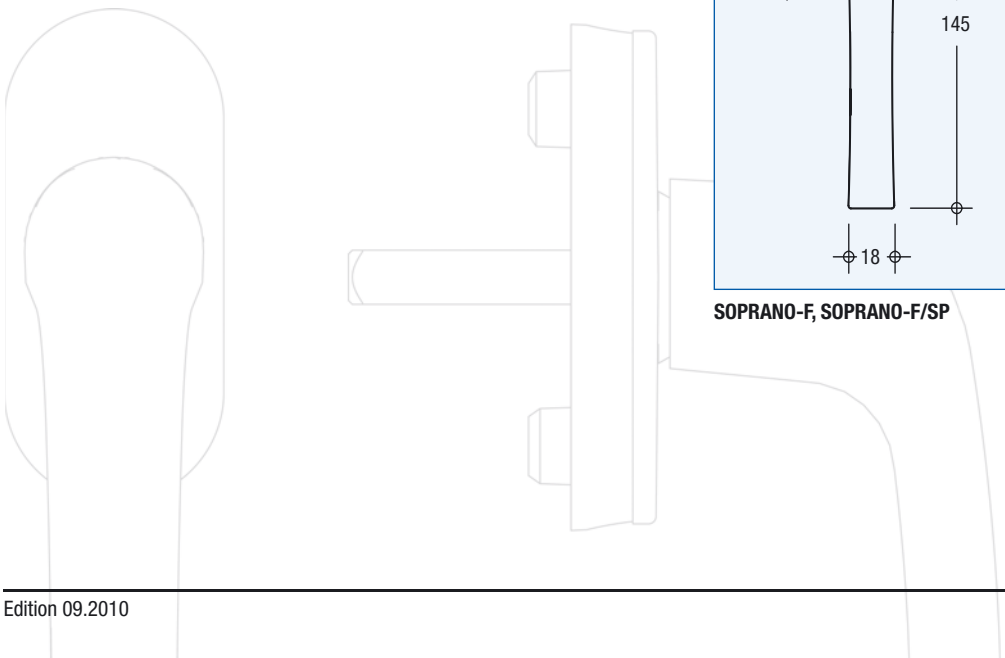

Turn handles for windows

A straight line but still soft design feature the window handles SAN REMO – they easily fit in the hand and provide comfortable operation.

The programme comprises inside handles made from aluminium for timber, PVC and aluminum windows and balcony doors.

Standard types

Description	Variant	Order number
SAN REMO-F	inside	G-21608-* *-0-*
SAN REMO-F/Z	inside, with locking cylinder	G-21609-* *-0-*

Sonderausführungen

Descripton	Variant	Order number
SAN REMO-F/SP	inside, 45° detent	6-32363-* *-0-*

** Spindle length see page 3.3

SAN REMO-F SAN REMO-F/Z

Technical data

Inside rosette	28 x 66 mm
Detent	90° or 90° and 45° F/SP
Positioning plugs	Ø 10 mm
Length of pos. plugs	5 mm
Square spindle	fixed, 7 x 29, 7 x 33 or 7 x 38 mm
Differ	F/Z keyed alike
Rosette cover	turnable
Fixing	concealed

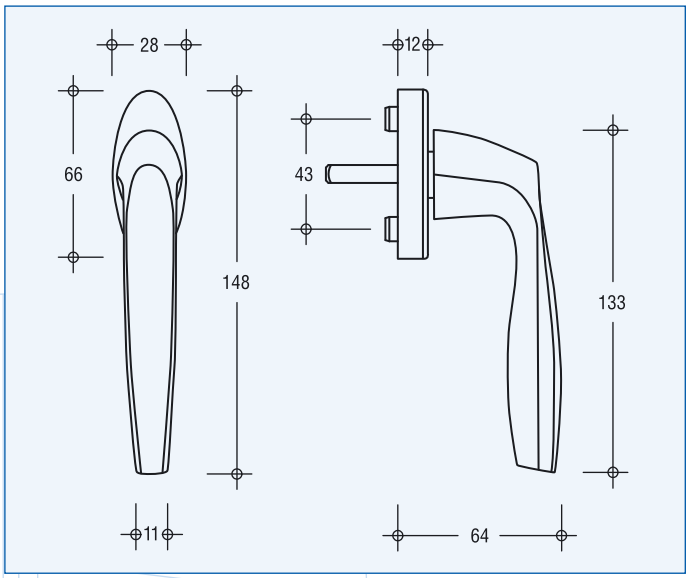

SAN REMO-F, SAN REMO-F/SP

Face fixed window lock

Upgradable security for tilt-turn and side hung windows

The easily mounted locking device is an efficient protection against burglary. Even if the window is broken or the frame drilled, it is impossible to turn the locked handle to open the sash from outside.

The metal deadbolt throws into the rugged keeper (throw of 18 mm), thus preventing the sash from being lifted and forced open. The combination of lockable turn handle and face fixed lock offers high resistance against burglars.

In addition to the central locking mechanism of the window, the face fixed lock provides an extra locking point. The device can be retrofitted on tilt-turn and side hung windows with 15 mm backset gear. The adaptation to various overlap thicknesses is achieved with packers.

The mounting is simple: the face fixed lock is fastened to the sash with screws right underneath the handle, the keeper is positioned on the frame accordingly and fixed with screws. Instructions are supplied with the product.

Lateral space requirement

- Timber windows with 4 mm rebate clearance: 26 mm
- Timber windows with Euro rebate: 23 mm
- PVC windows with 20 and 22 mm overlap width: 22 mm

Execution		
Description	Variant	Order number
Box Face fixed window lock	with turn handle DIRIGENT F/Z	K-14662-00-0-*

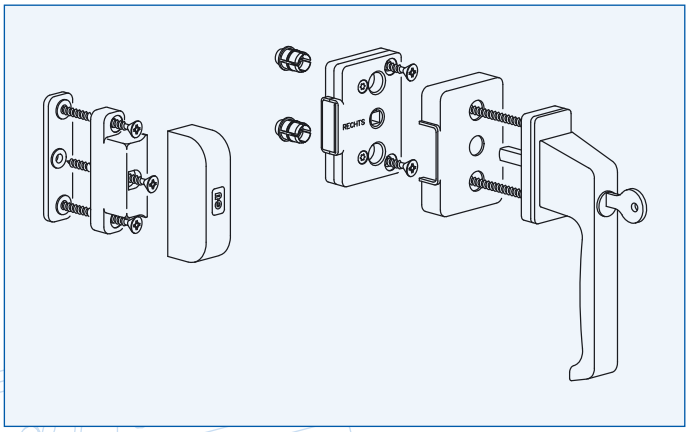

Contents of box:
Turn handle DIRIGENT F/Z, lockable
Spindle 7 x 75 mm
Face fixed lock
Cover for face fixed lock
Sleeve for Ø 10 mm and 12 mm (2 pcs. each)
Strike box
Cover for strike box
Packers 3 mm, 4 mm, 5 mm, 6 mm (1 piece each)
Spax countersunk screw 5 x 55 mm (7 pcs.)

* Finish: 11 = F 1/EV 1, 5 = dark brown, 7 = white (RAL 9016)

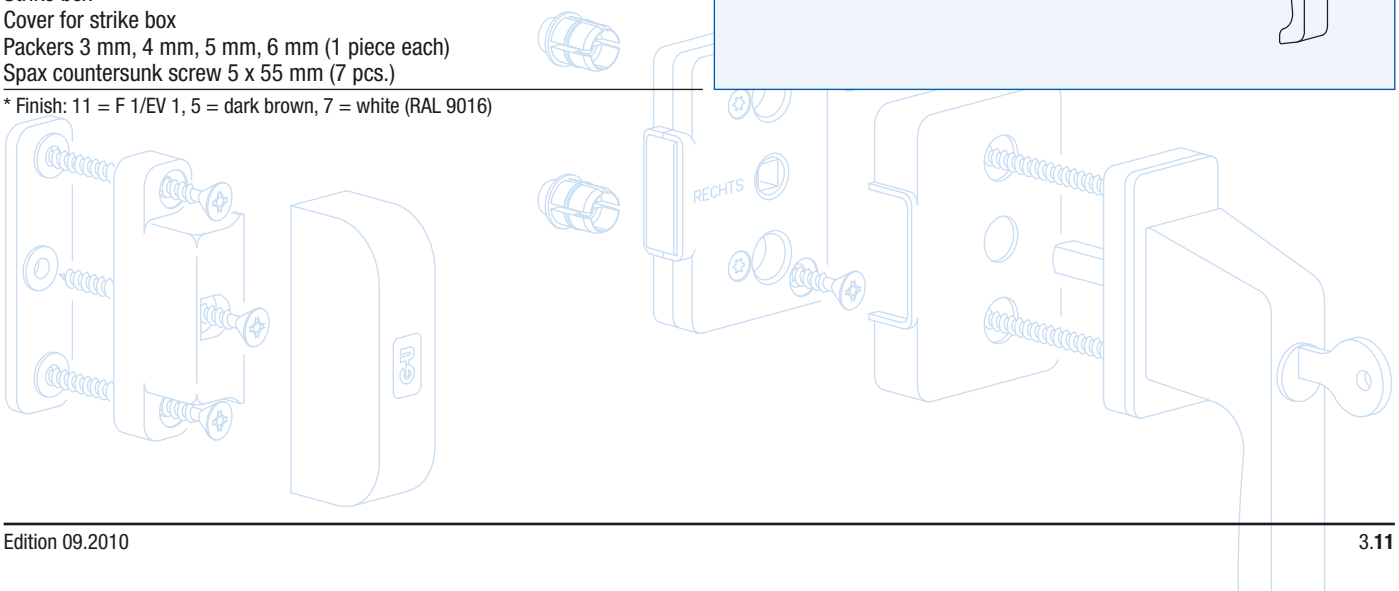

Rosettes and spindles for windows and patio doors

Rosette PZ, Rosette RZ (Swiss round cylinder)
inside, with cylinder bore and Ø 10 mm positioning plugs

PU	Description	Order number
20 pcs.	Rosette PZ, square	K-17205-02-0-*
20 pcs.	Rosette PZ, oval	K-17204-02-0-*
20 pcs.	Rosette RZ, square	K-17205-03-0-*
20 pcs.	Rosette RZ, oval	K-17204-03-0*

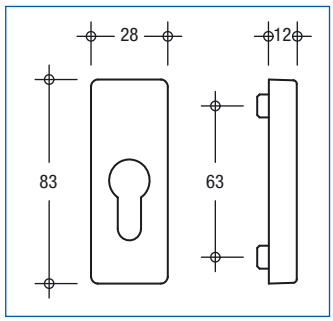

Rosette PZ, square

Rosette PZ/A, Rosette RZ/A (Swiss round cylinder)
outside, with cylinder bore and Ø 10 mm positioning plugs

PU	Description	Order number
20 pcs.	Rosette PZ/A, square	9-43605-02-0-*
20 pcs.	Rosette PZ/A, oval	9-43582-02-0-*
20 pcs.	Rosette RZ/A, square	9-43605-03-0-*
20 pcs.	Rosette RZ/A, oval	9-43582-03-0-*

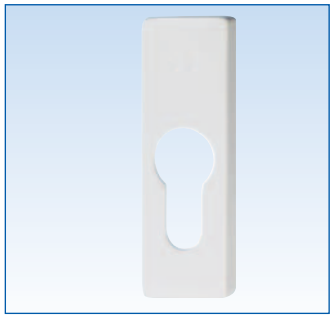

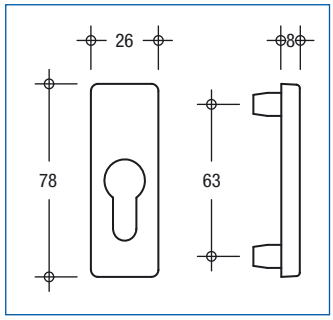

Rosette PZ, square

Removable rosette F
inside – flat, with slide shutter for removable handle

PU	Description	Order number
20 pcs.	Removable rosette F	6-24913-00-0-*

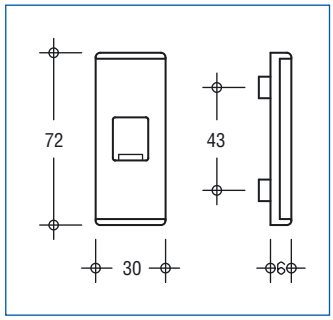

Adapter sleeve
to extend the positioning plug Ø from 10 to 12 mm

Description	Order number
Adapter sleeve	9-40496-00-0-0

Square spindles 7 mm

PU	Spindle length	Sash thickness	Order number
20 pcs.	70 mm		9-26874-16-0-1
20 pcs.	118 mm	56 – 68 mm	9-26874-56-0-1
100 pcs.	131 mm	69 – 80 mm	9-26874-69-0-1
20 pcs.	143 mm	81 – 92 mm	9-26874-81-0-1

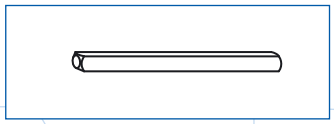

Fixed pull

PU	Description	Order number
50 pcs.	Fixed pull	9-22921-00-0-*

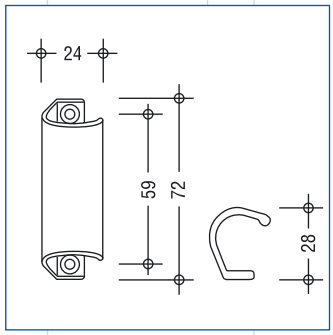

Countersunk screw M5 for turn handle fastening

PU	Count. screw	Inside operation, for spindle length	Order number
400 pcs.	M5 x 40	29 and 33 mm	9-13255-40
1 pc.	M5 x 50	38 mm	9-13255-50
		Operation on both sides for sash thickness	
400 pcs.	M5 x 60	50 – 54 mm	9-13255-60
400 pcs.	M5 x 65	55 – 59 mm	9-13255-65
400 pcs.	M5 x 70	60 – 64 mm	9-13255-70
400 pcs.	M5 x 75	65 – 69 mm	9-13255-75
400 pcs.	M5 x 80	70 – 74 mm	9-13255-80
400 pcs.	M5 x 85	75 – 80 mm	9-13255-85

Product group

B

Parallel slide and tilt fittings
slide-fold fittings

Parallel slide and tilt fittings and slide-fold fittings for aluminium windows and patio doors

Introduction

Parallel slide and tilt fittings – Euro groove 15/20 mm

Parallel slide and tilt locking mechanisms

Runners, profiles and accessories

Drilling jigs, positioning jigs

Parallel slide and tilt fittings – Fitting groove 16 mm

Parallel slide and tilt locking mechanisms

Runners, profiles and accessories

Drilling jigs, positioning jigs

Introduction

Slide-fold fittings – Euro groove 15/20 mm

Slide-fold locking mechanisms

Runners, profiles and hinges

Hinge side JET AK 8

Drilling jigs, positioning jigs

Slide-fold fittings – Fitting groove 16 mm

Slide-fold locking mechanisms

Runners, profiles and hinges

Hinge side UNI-JET C and D

Drilling jigs, positioning jigs

Slide fittings INLINE, flush pulls EURIS

Order catalogue part 4
Parallel slide and tilt fittings for aluminium windows and patio doors

Contents

Part 4 of the present catalogue contains all parallel slide and tilt fittings and accessories to the latest state of the art.
The following indications will make you familiar with the concept of the catalogue and help you to handle it easily.

Catalogue structure

The present catalogue part is structured in the following way:
– Optional parts and turn handles
– Sets
– Drilling and assembly tools
– Positioning plates and locking plates

Optional parts and turn handles

The option pages show you optional parts and turn handles for all parallel slide and tilt fittings at a glance. All supplements of standard versions are clearly arranged.

Locking mechanisms

Fitting requirements according to size of sashes and schemes A to K
The illustrations of the fittings are supplemented by corresponding parts tables helping to determine the hardware required depending on the size of the sashes. Parts supplementing standard versions are clearly presented and can be easily selected.

Runners, profiles and accessories

Fitting requirements for schemes A to K
The illustrations of the fittings are supplemented by corresponding parts tables helping to determine the hardware composition.
Parts supplementing standard versions are clearly presented and can be easily selected.

Drilling and positioning jigs

Drilling jigs, positioning jigs and auxiliary tools for hardware assembly are grouped according to fitting types.

Positioning plates, locking plates

Positioning plates and locking plates depending on hardware type, profile system and resistance class are listed in a table at the end of this catalogue chapter.

Order numbers

The order number gives information about
– the article
– its size
– its application - e.g. DIN lh or DIN rh - and
– its colour/finish

Example
Order number
6-23830-01-0-1

6-23830- - -	Article number
- -01- -	Size
- - -L-	Left hand assembly
- - -R-	Right hand assembly
- - -0-	Usable on both sides
- - - -1	F 1/EV 1, natural (silver colour), fer**GU**ard*silver
- - - -2	F 2/EV 2, champagne colour
- - - -3	F 3, brass colour (gold colour)
- - - -4	UC 3, medium bronze (medium brown)
- - - -A	F 4, bronze colour
- - - -C	Titanium colour
- - - -5	UC 5, dark bronze (dark brown RAL 8022)
- - - -6	onyx matt (black RAL 9005)
- - - -7	white (RAL 9016)
- - - -7T	white (RAL 9010)
- - - -8	Stainless steel (stainless steel colour)
- - - -*	Surface treatment variable (available colours see price list)

Prices

Single part price list "Total programme"
The prices are listed by ascending article numbers.

Additional sales documentation

Apart from the order catalogue, the following documentation on parallel slide and tilt fittings is available:
– Brochures and leaflets informing about product features and advantages
– Presentation boards of all fitting versions
– Working drawings with mounting instructions
– Instructions for maintenance and care

Parallel slide and tilt fittings for aluminium windows and patio doors

Application

Range of applications for G.U parallel slide and tilt fittings:
– Parallel slide and tilt patio doors with 2 to 4 sashes
– Parallel slide and tilt windows with 2 to 4 sashes
each with running and gliding rails.

Locking mechanisms

Parallel slide and tilt locking mechanisms G.U-mZ
The locking mechanism G.U-mZ features one handle operation, forced control and an opening movement of 111 mm. Gear side with carrier for geared handle or lockable cylinder gear with 40 mm backset prepared for the installation of a profile cylinder.
All locking parts are designed for Euro groove 15/20 mm. The locking pins of locking mechanism, stay arms and corner transmissions are adjustable. The clampable locking plates are adjustable to allow for optimum gasket pressure.
From sash widths and heights over 1200 mm, middle locks are used. Stay arms and corner transmissions are provided with rust-proof 4-leaf stainless steel springs.
G.U-968/200 mZ SW 740-2000 mm [1], SH 895-2400 mm
G.U-968/150 mZ SW 740-1600 mm, SH 895-2400 mm
[1] For SRW 1851-2000 mm, an middle stay arm is required.

Parallel slide and tilt locking mechanisms G.U-150 oZ and G.U-90 oZ
The locking cylinders G.U-150 oZ and G.U-90 oZ feature one handle operation, gasket pressure control from a sash width of 1201 mm and an opening width of 111 mm. Gear side with carrier for geared handle or lockable mill-in gears with 25 to 50 mm backset prepared for the installation of a profile cylinder.
All locking parts are designed for Euro groove 15/20 mm. The locking pins of locking mechanism and corner transmissions are adjustable. The clampable locking plates are adjustable to allow for optimum gasket pressure.
From sash widths and heights over 1200 mm, middle locks are used. Stay arms and corner transmissions are provided with rust-proof 4-leaf stainless steel springs.
G.U-968/150 oZ SW 600-1600 mm, SH 730-2400 mm
G.U-90 oZ SW 600-1600 mm, SH 700-2400 mm

Runners, profiles and accessories

Parallel slide and tilt fittings G.U-968/200
Parallel slide and tilt fittings with 4-wheel carriages and clamp fixed connecting rods for windows and patio doors with sash widths SW up to 2000 mm and sash weight up to 200 kg. Wheels made of fabric reinforced laminated plastic with ball bearing. Tandem runner for sashes with heavy glazing.
G.U-968/200 mZ Sash weight up to 200 kg

Parallel slide and tilt fittings G.U-968/150
Parallel slide and tilt fittings with 4-wheel carriages and clamp fixed connecting rods for windows and patio doors with sash widths SW up to 1600 mm and sash weight up to 150 or 130 kg. Wheels made of fabric reinforced laminated plastic with ball bearing.
G.U-968/150 mZ Sash weight up to 150 kg
G.U-968/150 oZ Sash weight up to 130 kg

Parallel slide and tilt fittings G.U-90
Parallel slide and tilt fittings with 4-wheel carriages and clamp fixed connecting rods for windows and patio doors with sash widths SW up to 1600 mm and sash weight up to 90 kg. Wheels made of fabric reinforced laminated plastic with ball bearing.
G.U-90 oZ Sash weight up to 90 kg

Positioning plates, locking plates

Frame profile specific positioning plates and locking plates according to table (see at the end of this catalogue chapter).

Drilling jigs, positioning jigs

Drilling jigs and other tools for hardware assembly are to be found at the end of this catalogue chapter and also in the respective working drawings.

Geared handles DIRIGENT, SPACIO and ADAGIO-A

The geared handles with concealed fixings are made of aluminium. The rosettes are provided with a rugged detent device. Lockable and removable handles as well as handles SPACIO with extended carrier fork complete the programme.

uncoated	without surface coating
F 1/EV 1	silver colour
UC 5	dark bronze
black	black (RAL 9005)
white	white (RAL 9016 or RAL 9010)

Turn handles DIRIGENT [1]

The handles are made of aluminium with concealed fixings. The rosettes have a robust retention feature and fixed cams. Lockable handles complete the programme.

Standard colours:

F 1/EV 1	silver colour
F 2/EV 2	new silver colour
F 3	gold colour
F 4	light brown
dark brown	dark brown (RAL 8022)
black	black (RAL 9005)
white	white (RAL 9016)

[1] More turn handles see part 3 of the present order catalogue.

Standard handles

Standard version for parallel slide and tilt fittings G.U-966/200 mZ and G.U-966/150 mZ: geared handle with anti-lockout device;
standard version for parallel slide and tilt fittings G.U-966/150 oZ and G.U-90 oZ: geared handle SPACIO .

Running rails P 1213, P 1300, P 1585, P 1664

Aluminium running rails, suitable for use with parallel slide and tilt sashes with standard and special fittings.

Gliding rail P 1225

Aluminium gliding rail for parallel slide and tilt sashes (top guide).

Standard colours

Parallel slide and tilt fittings are supplied in the following standard colours:

EV 1	Visible aluminium parts anodized EV 1, cover profiles grey
UC 3	Visible aluminium parts anodized middle bronze, cover profiles middle brown
UC 5	Visible aluminium parts anodized dark bronze, cover profiles dark brown
white	Visible aluminium parts anodized EV 1, cover profiles white

Further colours and finishes on request.

Materials, surface sealing fer**GU**ard*silver

The fitting parts are made of high quality steel, zinc die-casting or aluminium alloys.
Depending on the material, they are protected against corrosion by surface sealing with fer**GU**ard*silver or by anodisation (aluminium parts).

Standard surface sealing of parallel slide and tilt fittings: fer**GU**ard*silver

All locking components of parallel slide and tilt fittings come with the surface sealing fer**GU**ard*silver.

Abbreviations

lh	left hand
ML	Middle lock
PU	Packing unit
PZ	Profile cylinder
rh	right hand
Se	Security fittings
SH	Sash height
SW	Sash width
ST	Sash thickness

Profile system manufacturers' information

It is important to observe the product information issued by the profile system manufacturers, especially information concerning construction and fabrication, maximum sash dimensions and weights and material features such as linear expansion of profiles.

Dimension "Opening width"

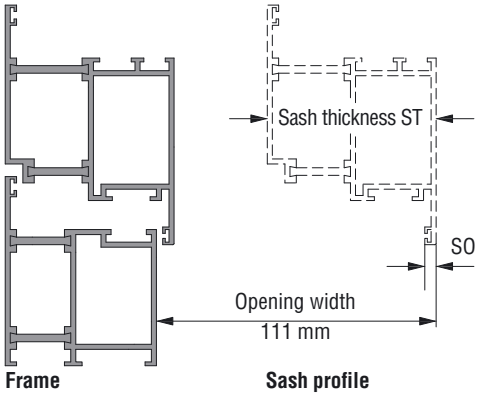

Maximum sash thickness ST

Side part as fixed glazing = 108 mm
Side part as side hung sash = 108 mm – thickness of sash overlap SO

Parallel slide and tilt fittings
for aluminium windows and patio doors

Sash arrangement according to schemes A to K

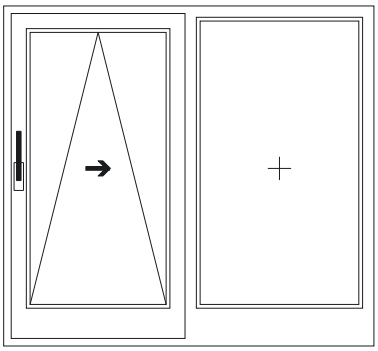

Scheme A – with mullion
1 parallel slide and tilt door, 1 fixed glazing
Drawing shows handle position lh

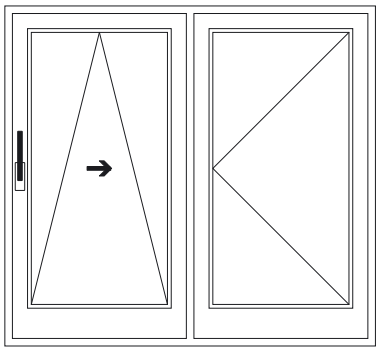

Scheme A – with mullion [1]
1 parallel slide and tilt door, 1 side hung door
Drawing shows handle position lh

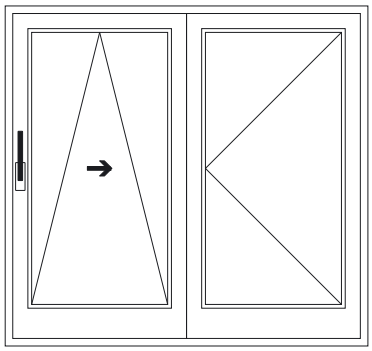

Scheme D – without mullion [2]
1 parallel slide and tilt door, 1 side hung door. Drawing shows handle position lh

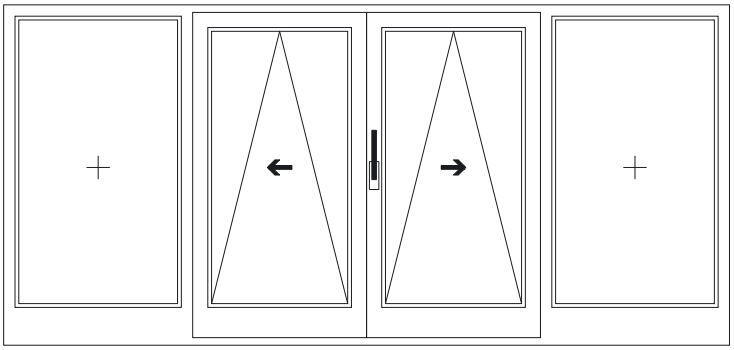

Scheme C – with mullion
2 parallel slide and tilt doors, 2 fixed glazings
Drawing shows first opening sash with handle position lh

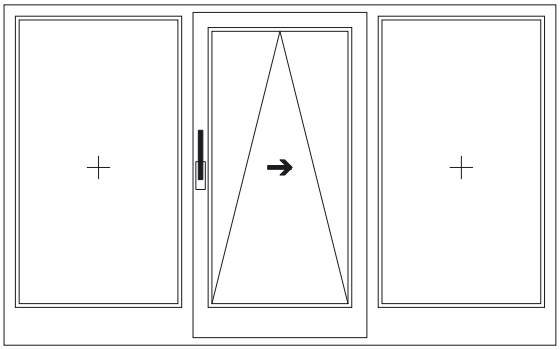

Scheme G – with mullion
1 parallel slide and tilt door, 2 fixed glazings
Drawing shows handle position lh

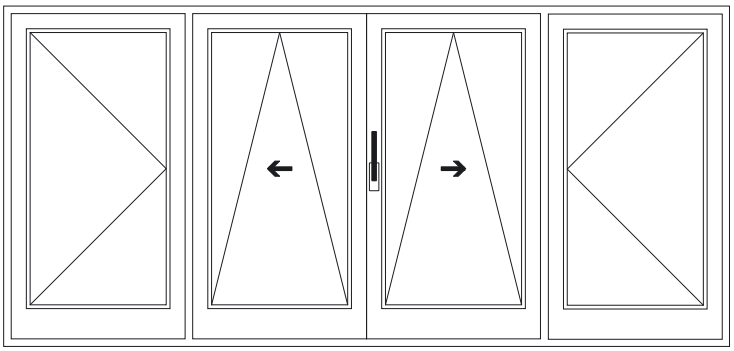

Scheme C – with mullion [1]
2 parallel slide and tilt doors, 2 side hung doors
Drawing shows first opening sash with handle position lh

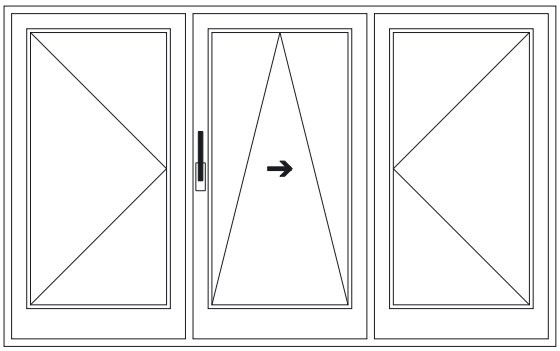

Scheme G – with mullion [1]
1 parallel slide and tilt door, 2 side hung doors
Drawing shows handle position lh

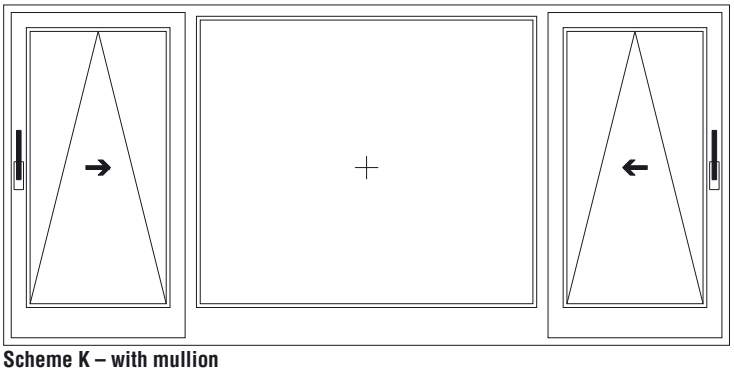

Scheme K – with mullion
2 parallel slide and tilt doors, 1 fixed glazing
Drawing shows handle position lh and handle position rh

Legend:

[1] Schemes A, C and G with side hung sash:
Side hung sash fittings JET AK 8with handle DIRIGENT-F/SG 8-00694-33-0-7 and rosette/F, inside – flat 6-24913-00-0-*, locking plates according to profile.

[2] Scheme D:
Side hung sash with rebate shoot bolt, locking plates according to profile.

Assembly dimensions – frame and sash profile

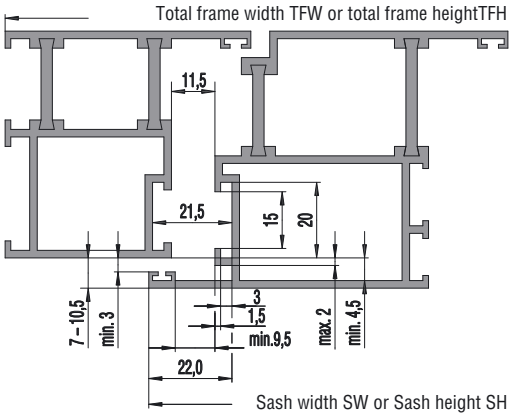

Frame and sash profile
Sash with Euro groove 15/20

Assembly dimensions – gliding rails, running rails, runners

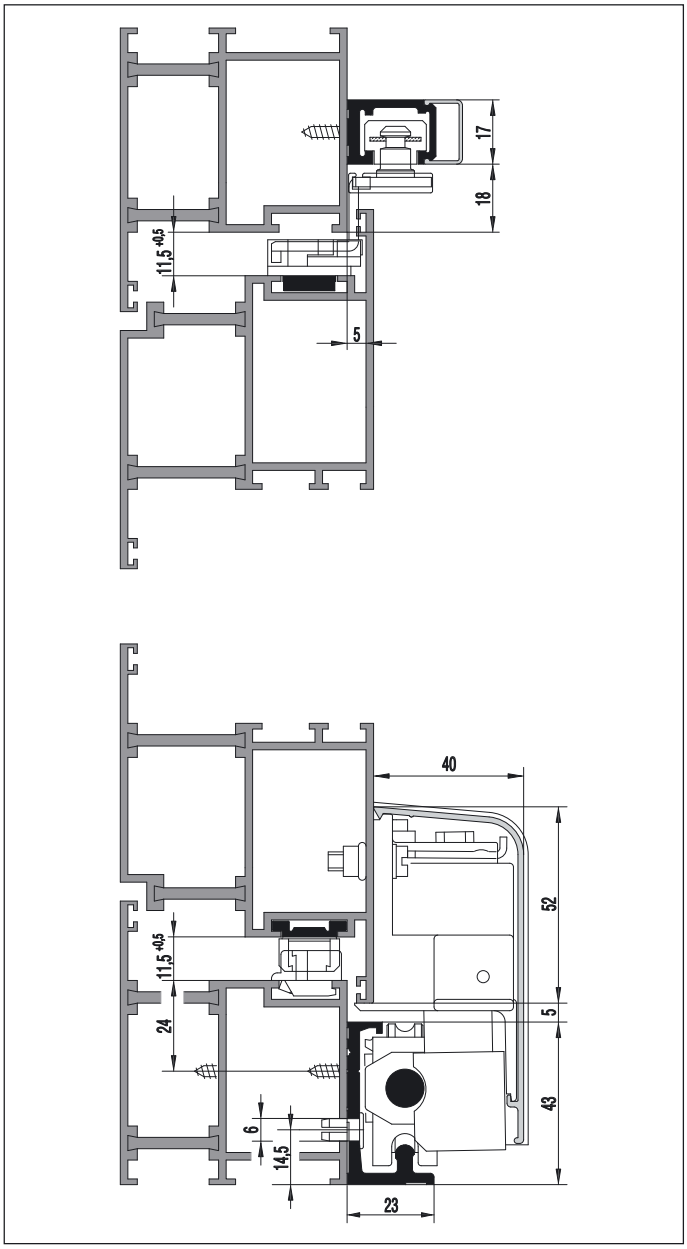

Parallel slide and tilt fittings G.U-968/200 mZ

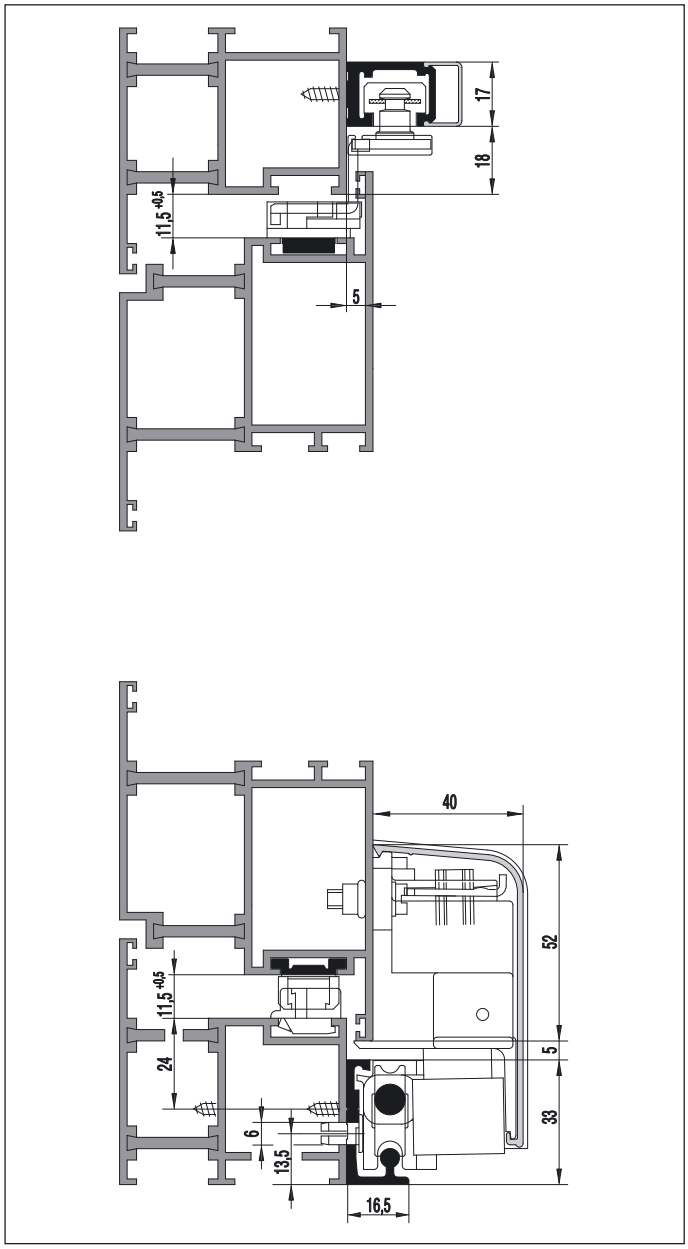

Parallel slide and tilt fittings G.U-968/150 mZ

Assembly dimensions – gliding rails, running rails, runners

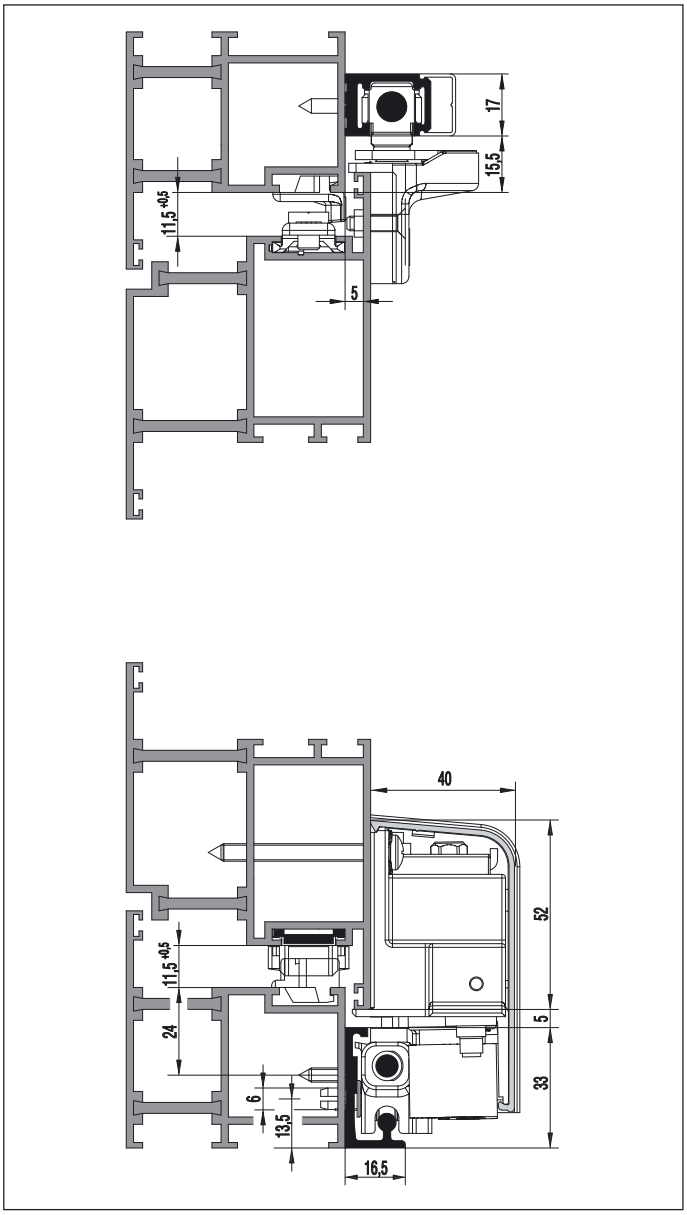

Parallel slide and tilt fittings G.U-968/150 oZ

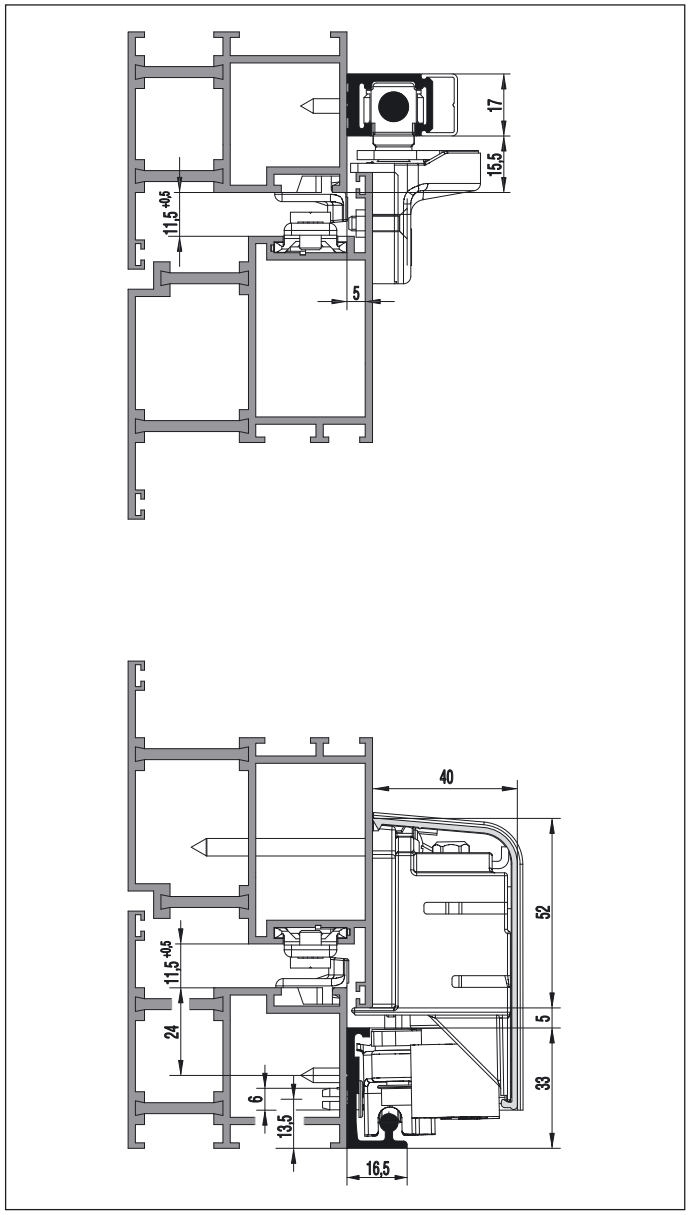

Parallel slide and tilt fittings G.U-90 oZ

Assembly dimensions – frame grooves

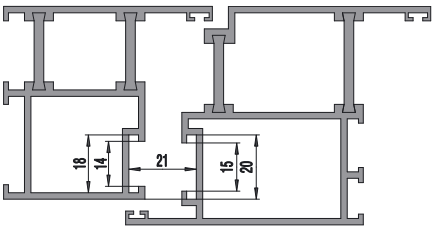

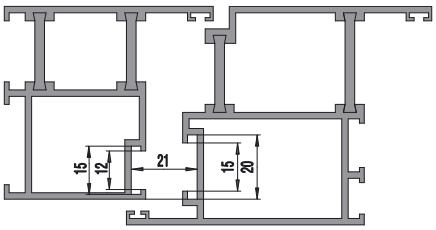

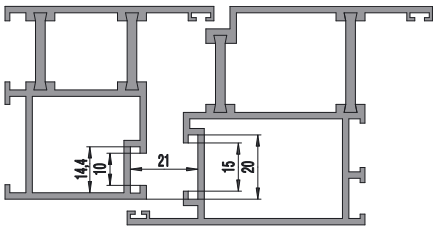

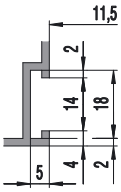

Frame groove 14/18

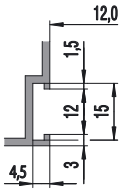

Frame groove 12/15

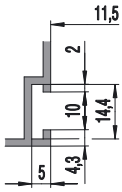

Frame groove 10/14

Drilling and milling dimensions geared handles and handles

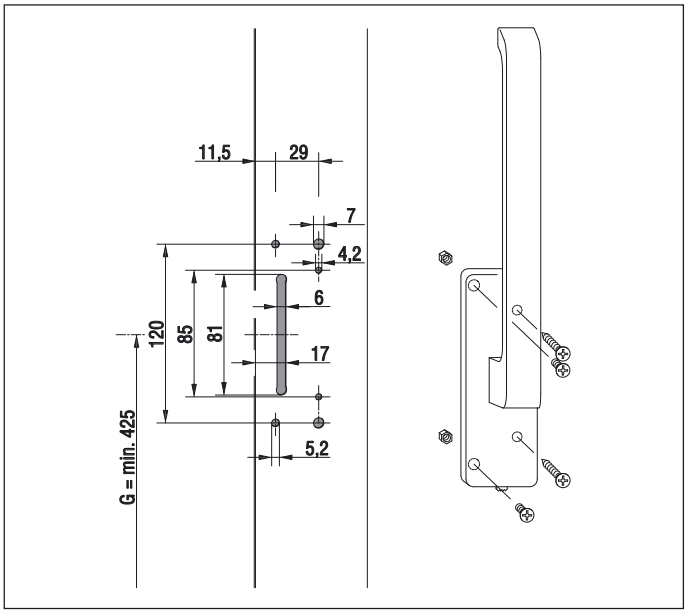

Drilling and milling dimensions for geared handle – Parallel slide and tilt locking mechanism G.U-mZ
Drilling jig 6-28894-00-0-0

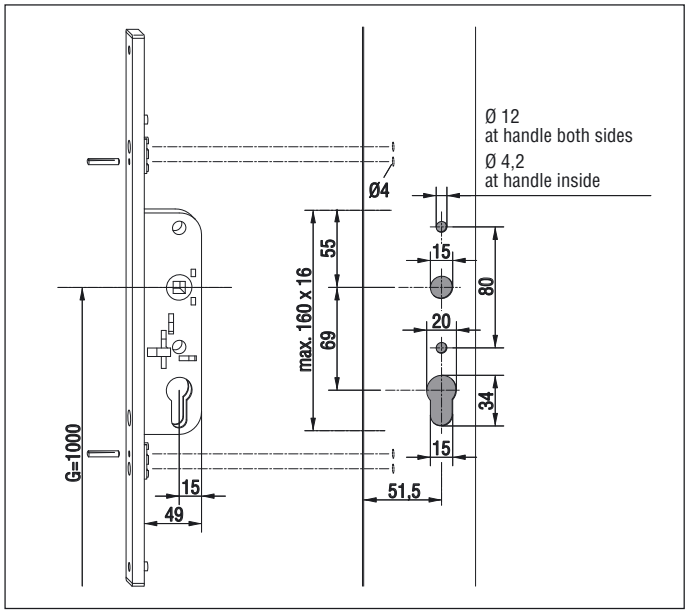

Drilling and milling dimensions for lockable gear – Parallel slide and tilt locking mechanism G.U-mZ
Drilling jig 9-27272-01-0-0

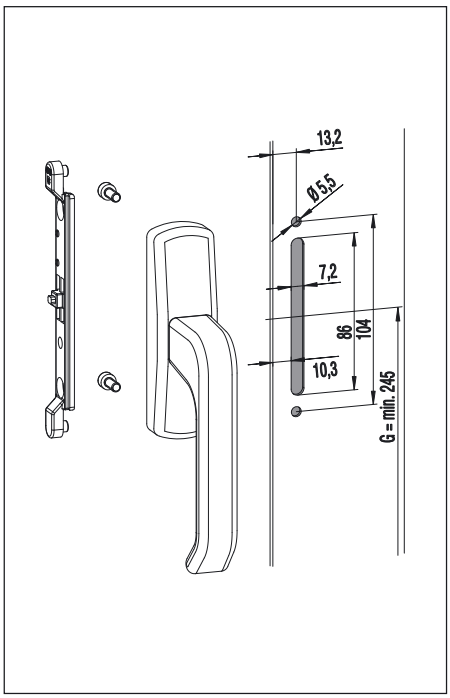

Drilling and milling dimensions for geared handle – Parallel slide and tilt locking mechanisms G.U-150 oZ and G.U-90 oZ
Drilling jig 6-25373-01-0-0

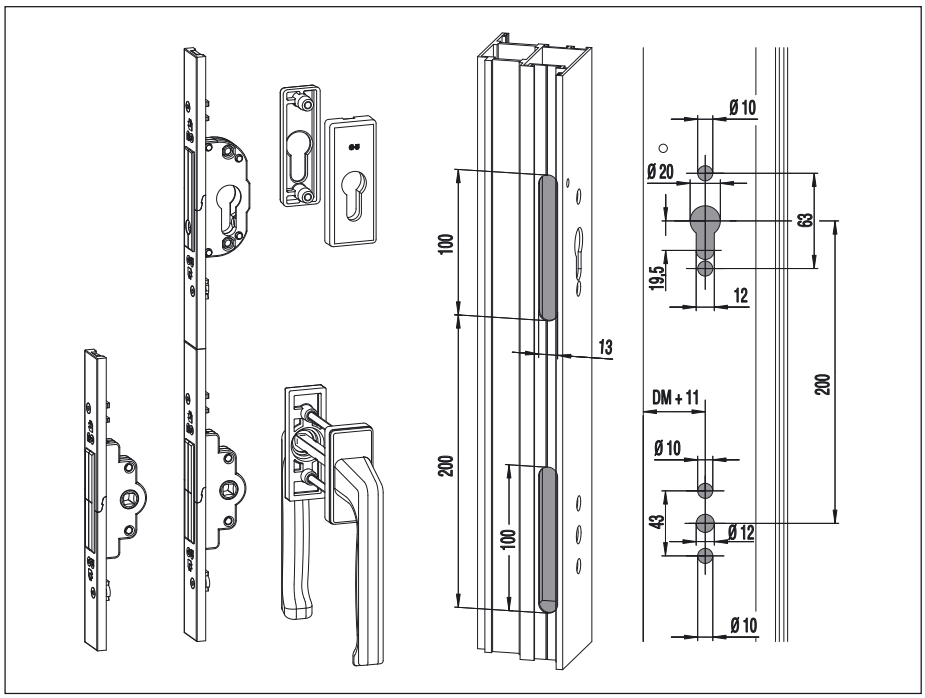

Drilling and milling dimensions for mill-in gear and lock with cylinder bore – Parallel slide and tilt locking mechanisms G.U-150 oZ and G.U-90 oZ
Drilling jig 6-26191-00-0-2

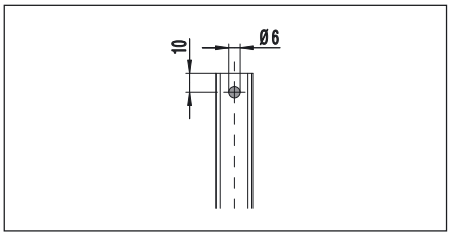

Push rod drill holes

Drilling and milling dimensions for stays, runners and supports

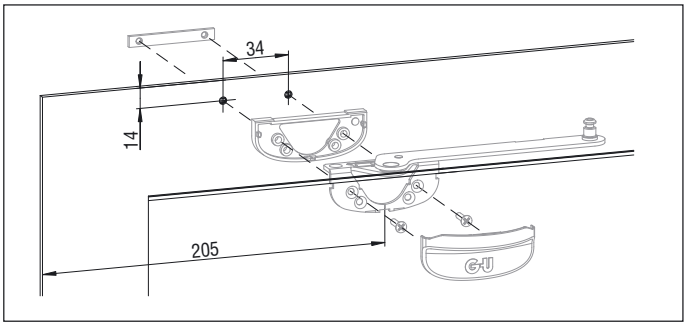

Drilling dimensions for stay –
Parallel slide and tilt locking mechanisms G.U-150 oZ and G.U-90 oZ

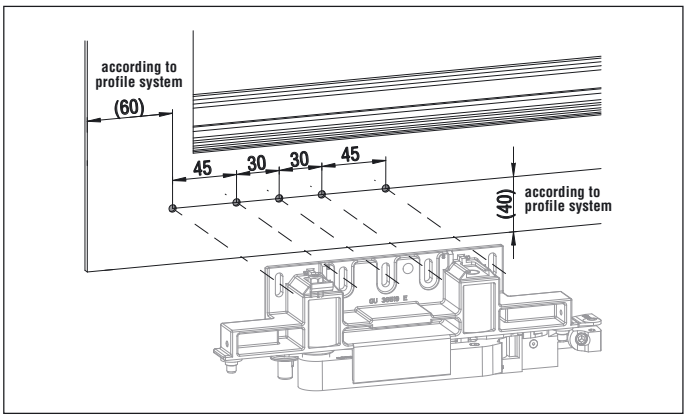

Drilling dimensions for runners –
Parallel slide and tilt locking mechanisms G.U-968/200 and G.U-968/150
Drilling jig 6-33342-00-0-0

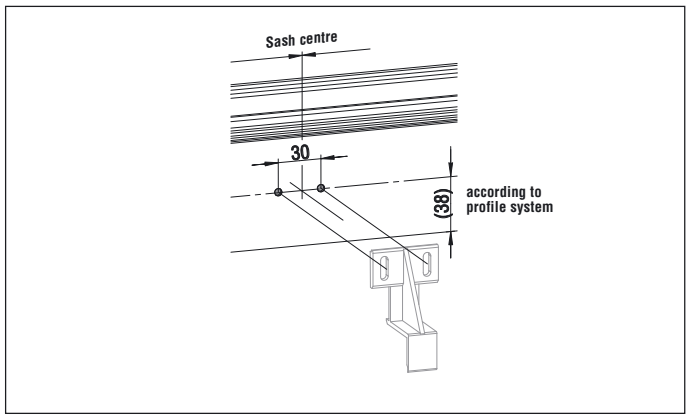

Drilling dimensions for supports –
Parallel slide and tilt locking mechanisms G.U-968/200 and G.U-968/150
Drilling jig 6-33342-00-0-0

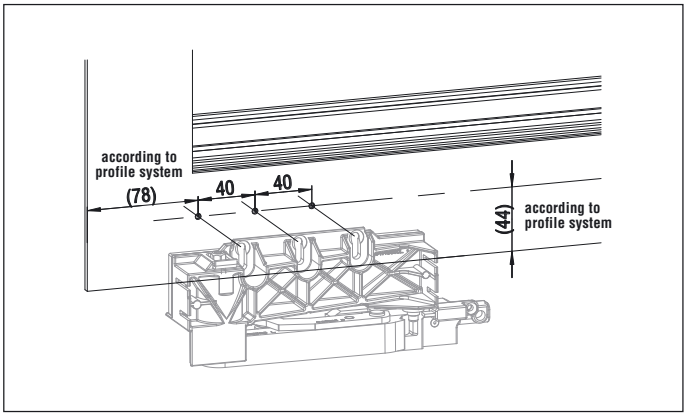

Drilling dimensions for runners –
Parallel slide and tilt locking mechanisms G.U-90
Drilling jig 9-30424-00-0-0

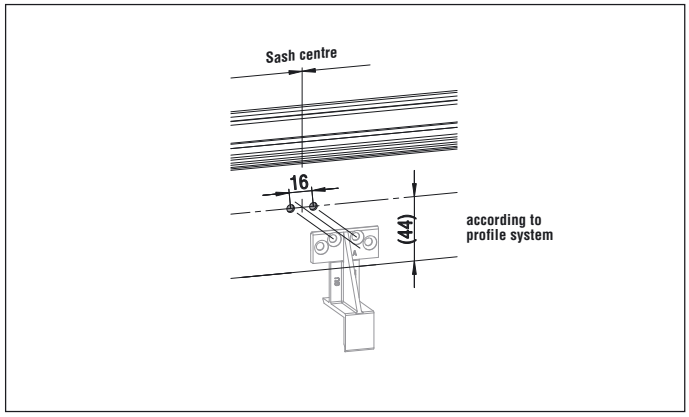

Drilling dimensions for supports –
Parallel slide and tilt locking mechanisms G.U-90
Drilling jig 9-30424-00-0-0

Quantity per sash and push rod cutting lengths with 22 mm sash overlap – G.U-968/200 mZ

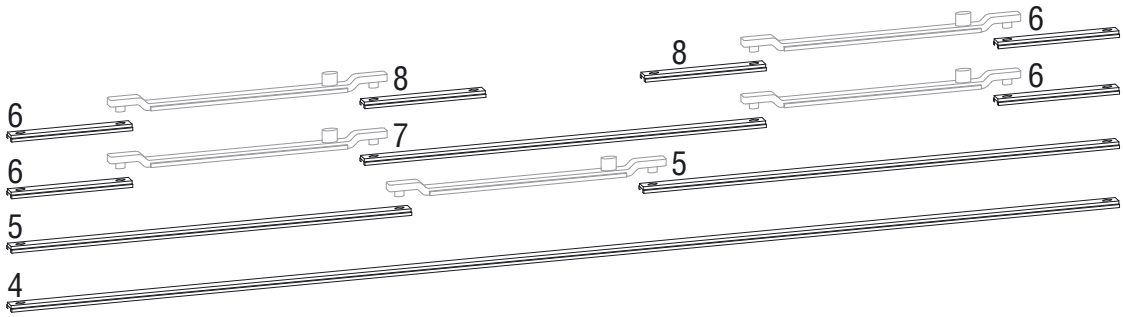

Push rods

Quantity per sash and cutting lengths for G.U-968/200 mZ

No.	**Sash height SH** Computation formula	**Sash width SW** Quantity per sash			
	895 - 1200	**740-1200**	**1201-1600**	**1601-1850**	**1851-2000**
1	L = G – 388	1	1	1	1
2	L = SH – G – 433	1	1	1	1
3	L = SH – 665	1	1	1	1
4	L = SW – 700	2	–	–	–
5	L = SW/2 – 428	–	4	–	–
6	L = 72	–	–	4	4
7	L = SW – 1156	–	–	2	1
8	L = SW/2 – 1502	–	–	–	2
	1201 - 2400	**740-1200**	**1201-1600**	**1601-1850**	**1851-2000**
1	L = G – 388	2	2	2	2
2	L = SH – G – 433	2	2	2	2
4	L = SW – 700	2	–	–	–
5	L = SW/2 – 428	–	4	–	–
6	L = 72	–	–	4	4
7	L = SW – 1156	–	–	2	1
8	L = SW/2 – 1502	–	–	–	2

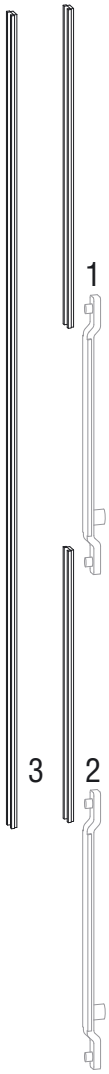

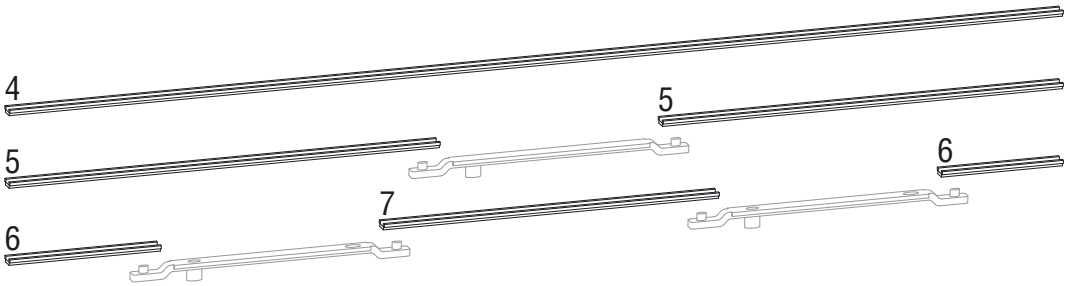

Quantity per sash and push rod cutting lengths with 22 mm sash overlap – G.U-968/150 mZ

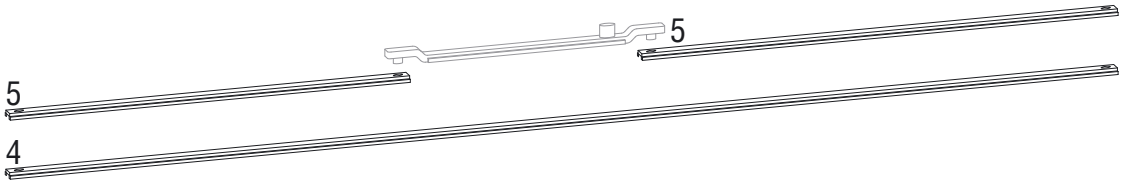

Push rods

Quantity per sash and cutting lengths for G.U-968/150 mZ

No.	**Sash height SH** Computation formula	**Sash width SW** Quantity per sash		
	895 - 1200	**740-1200**	**1201-1600**	
1	L = G – 388	1	1	
2	L = SH – G – 433	1	1	
3	L = SH – 665	1	1	
4	L = SW – 700	2	–	
5	L = SW/2 – 428	–	4	
	1201 - 2400	**740-1200**	**1201-1600**	
1	L = G – 388	2	2	
2	L = SH – G – 433	2	2	
4	L = SW – 700	2	–	
5	L = SW/2 – 428	–	4	

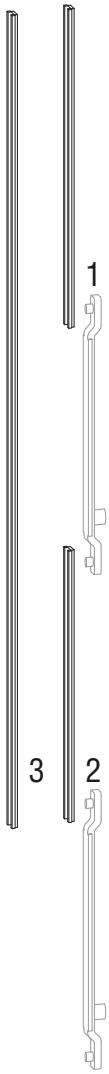

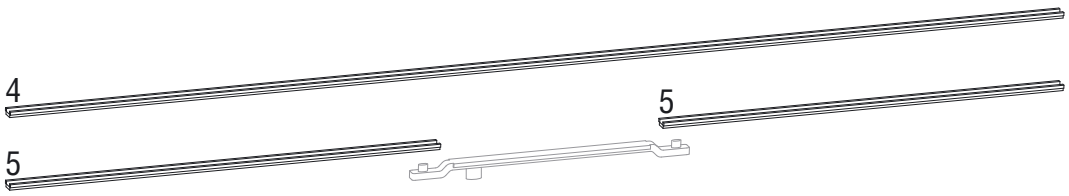

Quantity per sash and push rod cutting lengths with 22 mm sash overlap – G.U-968/150 oZ

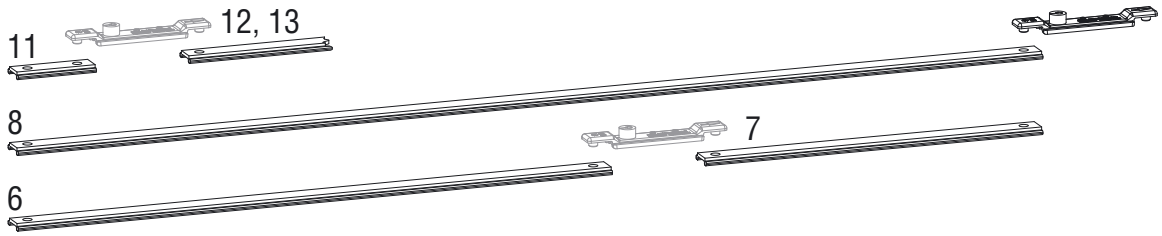

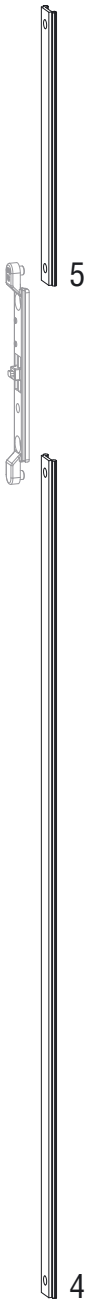

Push rods

Quantity per sash and cutting lengths for G.U-968/150 oZ

No.	**Sash height SH** Computation formula	**Sash width SW** Quantity per sash		
	730 - 1200	**600-1200**	**1201-1600**	
1	L = SW/2 – 366	–	1	
2	L = SW/2 – 237	–	1	
3	L = SW – 536	1	–	
4	L = G – 115	1	1	
5	L = SH – G – 393	1	1	
6	L = SW/2 – 88	–	1	
7	L = SW/2 – 186	–	1	
8	L = SW– 207	1	–	
11	L = 55	1	1	Scheme C
12	L = SW/2 – 199	–	1	Scheme C instead of 6
13	L = SW – 318	1	–	Scheme C instead of 8
	1201 - 2400	**600-1200**	**1201-1600**	
1	L = SW/2 – 366	–	1	
2	L = SW/2 – 237	–	1	
3	L = SW – 536	1	–	
4	L = G – 115	1	1	
5	L = SH – G – 393	1	1	
6	L = SW/2 – 88	–	1	
7	L = SW/2 – 186	–	1	
8	L = SW – 207	1	–	
9	L = SH/2 – 88	1	1	
11	L = 55	1	1	Scheme C
12	L = SW/2 – 199	–	1	Scheme C instead of 6
13	L = SW – 318	1	–	Scheme C instead of 8

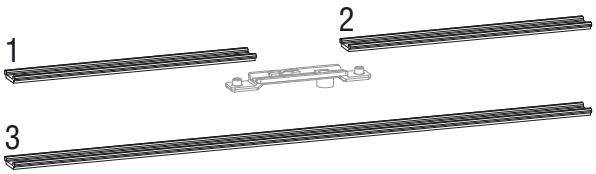

Quantity per sash and push rod cutting lengths with 22 mm sash overlap – G.U-90 oZ

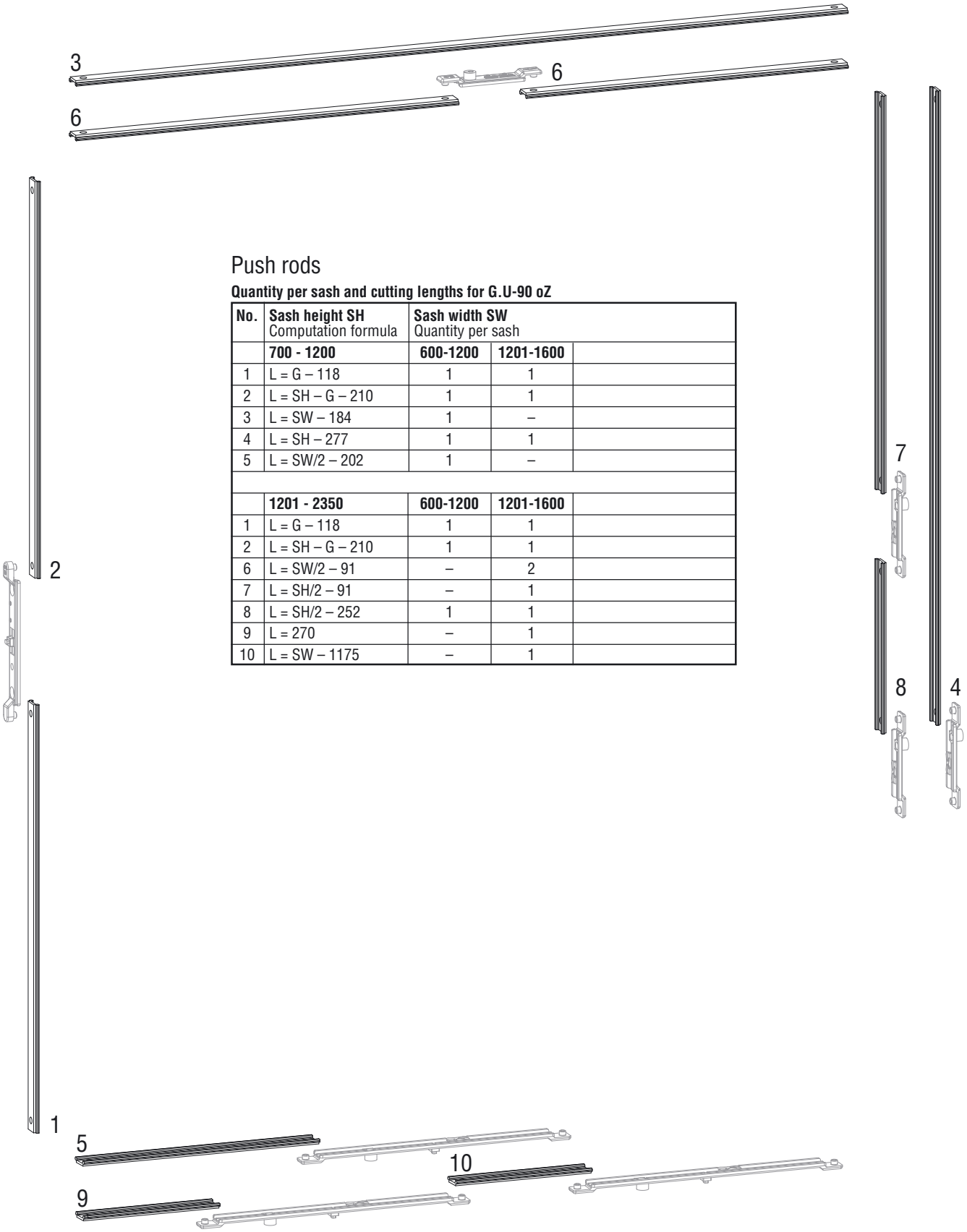

Push rods

Quantity per sash and cutting lengths for G.U-90 oZ

No.	**Sash height SH** Computation formula	**Sash width SW** Quantity per sash		
	700 - 1200	**600-1200**	**1201-1600**	
1	L = G – 118	1	1	
2	L = SH – G – 210	1	1	
3	L = SW – 184	1	–	
4	L = SH – 277	1	1	
5	L = SW/2 – 202	1	–	
	1201 - 2350	**600-1200**	**1201-1600**	
1	L = G – 118	1	1	
2	L = SH – G – 210	1	1	
6	L = SW/2 – 91	–	2	
7	L = SH/2 – 91	–	1	
8	L = SH/2 – 252	1	1	
9	L = 270	–	1	
10	L = SW – 1175	–	1	

Geared handles and handles for windows and patio doors, accessories
Parallel slide and tilt locking mechanisms G.U-mZ

Geared handles DIRIGENT – Aluminium

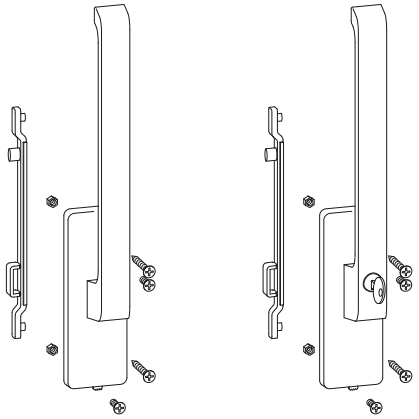

Contents:
1 geared handle
1 carrier
2 countersunk sheet metal screw 4,8x32
2 countersunk screw M 5 x 25
2 hex-nut M 5

Handle length 240 mm

Box of geared handle G.U-mZ DIRIGENT with anti-lockout device

		lockable – keyed alike	
Euro groove 15/20		**Euro groove 15/20**	
handle pos. lh	**K-14712-00-L-***	**handle pos. lh**	**K-14711-00-L-***
handle pos. rh	**K-14712-00-R-***	**handle pos. rh**	**K-14711-00-R-***
Profile system Hartmann		**Profile system Hartmann**	
handle pos. lh	**K-15042-00-L-***	**handle pos. lh**	**K-15043-00-L-***
handle pos. rh	**K-15042-00-R-***	**handle pos. rh**	**K-15043-00-R-***
Profile system Hueck		**Profile system Hueck**	
handle pos. lh	**K-15046-00-L-***	**handle pos. lh**	**K-15047-00-L-***
handle pos. rh	**K-15046-00-R-***	**handle pos. rh**	**K-15047-00-R-***

Geared handles G.U-mZ for windows

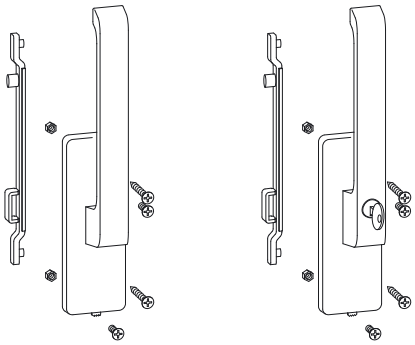

Contents:
1 geared handle
1 carrier
2 countersunk sheet metal screw 4,8x32
2 countersunk screw M 5 x 25
2 hex-nut M 5

Handle length 180 mm

Box of geared handle G.U-mZ DIRIGENT with anti-lockout device

		lockable – keyed alike	
Euro groove 15/20		**Euro groove 15/20**	
handle pos. lh	**K-17460-00-L-***	**handle pos. lh**	**K-17459-00-L-***
handle pos. rh	**K-17460-00-R-***	**handle pos. rh**	**K-17459-00-R-***

Handle DIRIGENT inside – Aluminium

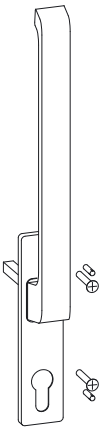

Contents:
1 handle inside
2 positioning pin

Handle length 240 mm

Bag of handle inside G.U-mZ DIRIGENT with cylinder bore

with cams	**6-24622-00-0-***
without cams	**6-24623-00-0-***

Handles DIRIGENT for operation from both sides – Aluminium

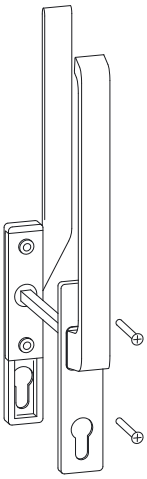

Contents:
1 handle for operation from both sides
2 countersunk screw M 6 x 75

Handle length 240 mm

Bag of handle for operation from both sides G.U-mZ, projection 20 mm DIRIGENT with cylinder bore and cams

K-13167-00-0-*

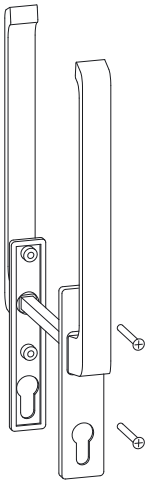

Contents:
1 handle for operation from both sides
2 countersunk screw M 6 x 75

Handle length 240 mm

Bag of handle for operation from both sides G.U-mZ, projection 30 mm DIRIGENT with cylinder bore and cams

K-12919-00-0-*

Countersunk screw DIN 965 for operation from both sides

ST		
-60 mm	**M 6 x 75**	**9-13274-75-0-1**
61-65 mm	**M 6 x 80**	**9-13274-80-0-1**
66-70 mm	**M 6 x 85**	**9-13274-85-0-1**
71-78 mm	**M 6 x 90**	**9-13274-90-0-1**

Geared handles and handles for windows and patio doors, accessories
Parallel slide and tilt locking mechanisms G.U-mZ

Geared handles DIRIGENT – Stainless steel

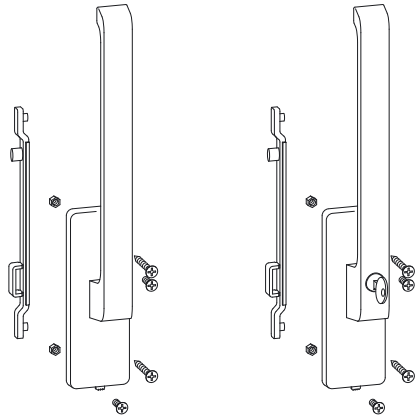

Contents:
1 geared handle
1 carrier
2 countersunk sheet metal screw 4,8x32
2 countersunk screw M 5 x 25
2 hex-nut M 5

Handle length 240 mm

Box of geared handle G.U-mZ
DIRIGENT with anti-lockout device

Euro groove 15/20
handle pos. lh K-17242-00-L-8
handle pos. rh K-17242-00-R-8

lockable – keyed alike

Euro groove 15/20
handle pos. lh K-17245-00-L-8
handle pos. rh K-17245-00-R-8

Handle DIRIGENT inside and dummy plate outside – Stainless steel

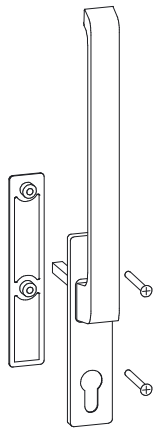

Contents:
1 handle inside
1 dummy plate outside
2 countersunk screws M 6 x 75

Handle length 240 mm

Bag of handle inside G.U-mZ
DIRIGENT with cylinder bore and cams
K-16925-00-0-8

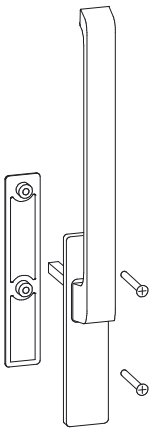

Contents:
1 handle inside
1 dummy plate outside
2 countersunk screws M 6 x 75

Handle length 240 mm

Bag of handle inside G.U-mZ
DIRIGENT without cylinder bore, with cams
K-16924-00-0-8

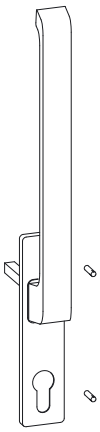

Contents:
1 handle inside
2 positioning pins 4 x 20

Handle length 240 mm

Bag of handle inside G.U-mZ
DIRIGENT with cylinder bore, without cams
K-16923-00-0-8

Geared handles and handles for windows and patio doors, accessories
Parallel slide and tilt locking mechanisms G.U-mZ

Geared handles RONDO – Stainless steel

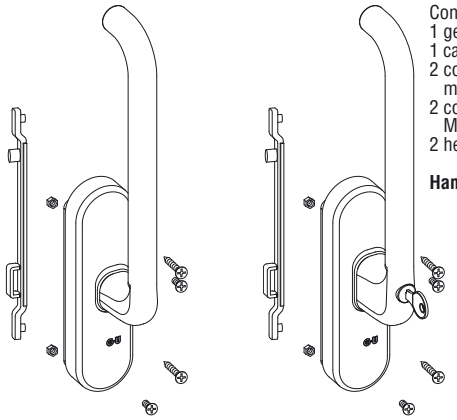

Contents:
1 geared handle
1 carrier
2 countersunk sheet metal screw 4,8x32
2 countersunk screw M 5 x 25
2 hex-nut M 5

Handle length 240 mm

Box of geared handle G.U-mZ
RONDO with anti-lockout device

Euro groove 15/20
handle pos. lh **K-17247-00-L-8**
handle pos. rh **K-17247-00-R-8**

lockable – keyed alike

Euro groove 15/20
handle pos. lh **K-17250-00-L-8**
handle pos. rh **K-17250-00-R-8**

Handle RONDO inside and dummy plate outside – Stainless steel

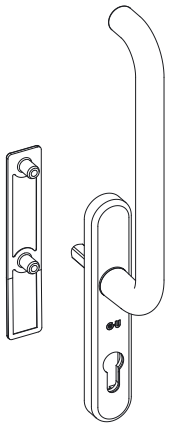

Contents:
1 handle inside
1 dummy plate outside
2 countersunk screws M 6 x 75

Handle length 240 mm

Bag of handle inside G.U-mZ
RONDO with cylinder bore and cams
K-16928-00-0-8

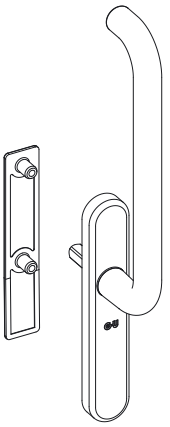

Contents:
1 handle inside
1 dummy plate outside
2 countersunk screws M 6 x 75

Handle length 240 mm

Bag of handle inside G.U-mZ
RONDO without cylinder bore, with cams
K-16927-00-0-8

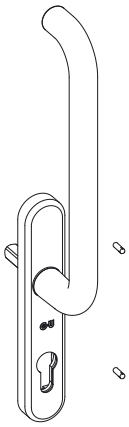

Contents:
1 handle inside
2 positioning pins 4 x 20

Handle length 240 mm

Bag of handle inside G.U-mZ
RONDO with cylinder bore, without cams
K-16926-00-0-8

Handle RONDO inside – Stainless steel / dummy plate outside – Aluminium

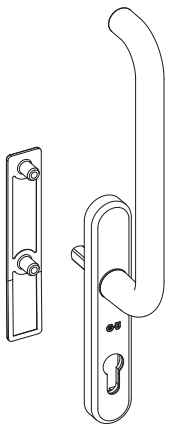

Contents:
1 handle inside
1 dummy plate outside
2 countersunk screws M 6 x 75

Handle length 240 mm

Bag of handle inside G.U-mZ
RONDO with cylinder bore and cams
K-17207-00-0-* [1]

[1] *= Colour dummy plate: 1 = EV 1, 5 = UC 5, 7 = white

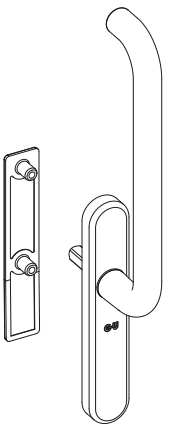

Contents:
1 handle inside
1 dummy plate outside
2 countersunk screws M 6 x 75

Handle length 240 mm

Bag of handle inside G.U-mZ
RONDO without cylinder bore, with cams
K-17206-00-0-* [1]

[1] *= Colour dummy plate: 1 = EV 1, 5 = UC 5, 7 = white

Geared handles and handles for windows and patio doors, accessories
Parallel slide and tilt locking mechanisms G.U-mZ

Geared handles FORTE – Stainless steel

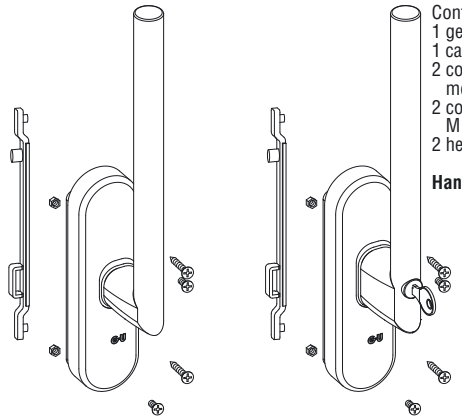

Contents:
1 geared handle
1 carrier
2 countersunk sheet metal screw 4,8x32
2 countersunk screw M 5 x 25
2 hex-nut M 5

Handle length 240 mm

Box of geared handle G.U-mZ FORTE with anti-lockout device

Euro groove 15/20
handle pos. lh K-17253-00-L-8
handle pos. rh K-17253-00-R-8

lockable – keyed alike

Euro groove 15/20
handle pos. lh K-17256-00-L-8
handle pos. rh K-17256-00-R-8

Handle FORTE inside and dummy plate outside – Stainless steel

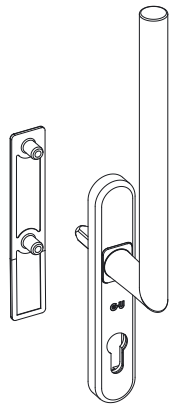

Contents:
1 handle inside
1 dummy plate outside
2 countersunk screws M 6 x 75

Handle length 240 mm

Bag of handle inside G.U-mZ
FORTE with cylinder bore and cams
K-17049-00-0-8

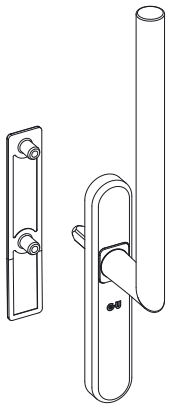

Contents:
1 handle inside
1 dummy plate outside
2 countersunk screws M 6 x 75

Handle length 240 mm

Bag of handle inside G.U-mZ
FORTE without cylinder bore, with cams
K-17048-00-0-8

Dummy plate outside – Stainless steel

Dummy plate outside
9-42833-00-0-8

Dummy plate outside – Aluminium

Dummy plate outside
9-30489-00-0-* [1]

[1] *= Colour dummy plate: 1 = EV 1, 5 = UC 5, 7 = white

Parallel slide and tilt fittings G.U-966/200 mZ
Tandem runner for sashes with heavy glazing

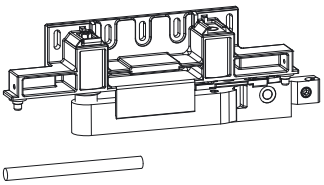

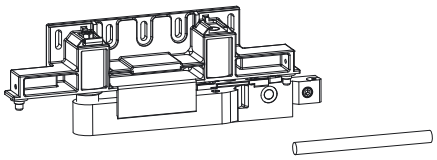

Rod **Runner T, front** **Runner T, rear** **Rod**

Box of runners G.U-968/200 T
for aluminium windows

Handle pos. lh	**K-15509-00-L-0**	**PU 1**
Handle pos. rh	**K-15509-00-R-0**	**PU 1**

Inhalt:
1 runner G.U-968/200 T, front
1 runner G.U-968/200 T, rear
2 rods, Ø 10 mm

Parallel slide and tilt fittings G.U-968/200 mZ
Box of middle stay G.U-mZ for sash rebate widths 1851 to 2000 mm

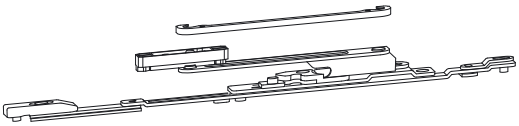

Middle stay G.U-mZ with stay arm glider and cover

Fitting requirements standard version

Middle stay G.U-mZ	
Handle pos. lh	6-29349-02-L-8
Handle pos. rh	6-29349-02-R-8
Stay arm glider	6-22755-00-0-0
Cover for middle stay	9-35573-00-0-*

Fitting requirements profile system Hartmann

Middle stay G.U-mZ	
Handle pos. lh	6-29349-04-L-8
Handle pos. rh	6-29349-04-R-8
Stay arm glider	6-22755-00-0-0
Cover for middle stay	9-35573-00-0-*

Fitting requirements profile system Hueck

Middle stay G.U-mZ	
Handle pos. lh	6-29349-03-L-8
Handle pos. rh	6-29349-03-R-8
Stay arm glider	6-22755-00-0-0
Cover for middle stay	9-35573-00-0-*

Parallel slide and tilt locking mechanisms G.U-mZ

Stop P 1225
6-30388-00-0-6

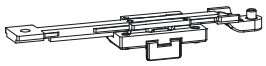

Bag of wrong operation safety device

Profile system	Article No.	Drill Ø mm
Euro gr. 15/20	K-17192-01-0-1	5,2
Euro gr. 15/20	K-17192-02-0-1	6,0
Hueck	K-17192-03-0-1	8,0
Schüco	K-17192-08-0-1	11,0
Wicona	K-17192-09-0-1	

Geared handles SPACIO aluminium, painted – 1 carrier fork 22 mm

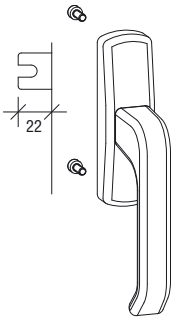

Bag of geared handle SPACIO – not lockable
2 screws
G-46551-96-0-*

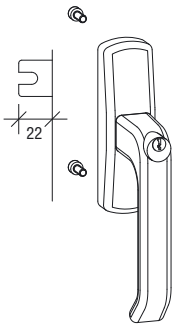

Bag of geared handle SPACIO – lockable
2 screws, 2 keys
G-46553-96-0-*

Bag of geared handle SPACIO – lockable for first tilt fittings
2 screws, 2 keys
G-46557-96-0-*

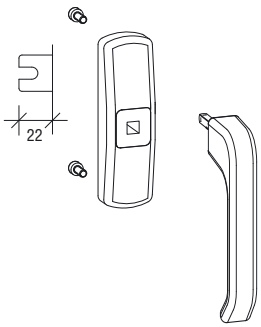

Bag of geared rosette SPACIO
2 screws
G-46555-96-0-*

Removable handle SPACIO
G-18888-00-0-*

Geared handles SPACIO aluminium, painted – 1 carrier fork 33 mm

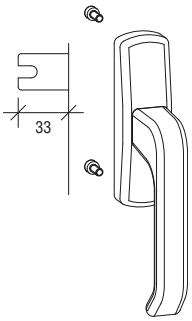

Bag of geared handle SPACIO – not lockable
2 screws
G-46595-96-0-*

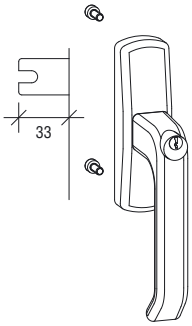

Bag of geared handle SPACIO – lockable
2 screws, 2 keys
G-46597-96-0-*

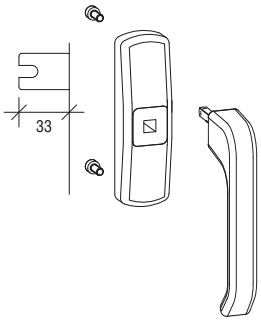

Bag of geared rosette SPACIO
2 screws
G-46596-96-0-*

Removable handle SPACIO
G-18888-00-0-*

Geared handles SPACIO aluminium, painted – 2 carrier forks 22 mm – DIN right hand

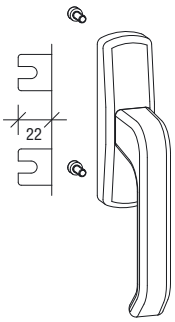

Bag of geared handle SPACIO – not lockable
2 screws
G-46552-96-R-*

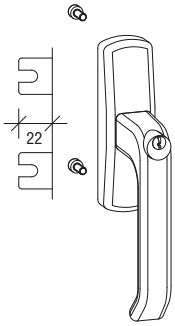

Bag of geared handle SPACIO – lockable
2 screws, 2 keys
G-46554-96-R-*

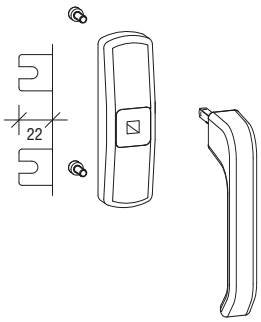

Bag of geared rosette SPACIO
2 screws
G-46556-96-R-*

Removable handle SPACIO
G-18888-00-0-*

Bag of accessories
Conversion of SPACIO handles with 2 carrier forks to DIN left hand
G-46550-00-L-1

Geared handles ADAGIO-A powder coated

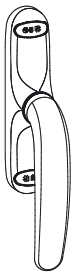

Geared handle ADAGIO-A – not lockable

6-31723-00-0-*

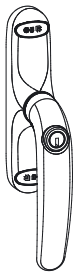

Geared handle ADAGIO-A – lockable
2 keys
6-31724-00-0-*

Clip – neutral
9-41505-00-0-*

Accessories for ADAGIO-A

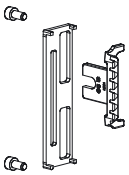

Bag of accessories for 1 carrier fork 22 mm
K-15814-00-0-1

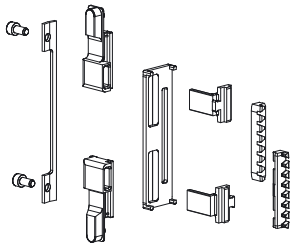

Bag of accessories for 2 carrier forks
K-15815-00-0-1

Accessories for side hung sashes with geared handle SPACIO

90° limiter
for aluminium rosettes
9-34612-00-0-6

Accessories for geared handles SPACIO and ADAGIO-A

Fixing plate – single
hole centre distance mm

104	**9-41506-00-0-8**

Handles DIRIGENT-F for mill-in gears [1]

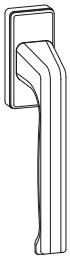

DIRIGENT-F
Spindle 25 6-28072-25-0-*
Spindle 29 6-28072-29-0-*

DIRIGENT-F/Z
with push button cylinder, all keys alike
Spindle 29 6-28075-29-0-*

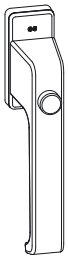

DIRIGENT-F
with anti-lockout device
Spindle 29 6-25384-00-0-*

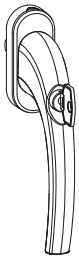

MODENA-F/Z 100 Nm [2]
for security windows and patio doors
Spindle 29 6-34397-29-0-*

DIRIGENT-F/SG
Spindle 50 8-00694-50-0-7

Rosette/F inside – flat
6-24913-00-0-*

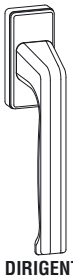

DIRIGENT-F
inside – without spindle
6-28072-00-0-*

DIRIGENT-F/AF,
outside – flat
6-25223-00-0-*

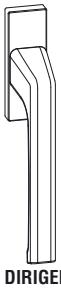

DIRIGENT-F/A,
outside
6-25993-00-0-*

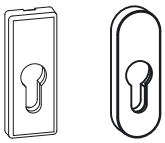

Rosette with CB inside
square K-17205-02-0-*
oval K-17204-02-0-*

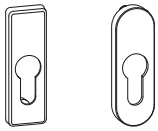

Rosette PZ/A outside
square 9-43605-02-0-*
oval 9-43582-02-0-*

Spindle
ST 56-68 9-26874-56-0-1
ST 69-80 9-26874-69-0-1

Inside/ outside operation
Countersunk screw M 5
ST 50-54 9-13255-60-0-1
ST 55-59 9-13255-65-0-1
ST 60-64 9-13255-70-0-1
ST 65-69 9-13255-75-0-1
ST 70-74 9-13255-80-0-1
ST 75-80 9-13255-85-0-1

Inside operation
Countersunk screw M 5
Spindle 25 9-13255-30-0-1
Spindle 29 9-13255-35-0-1

Knob lock
Backset 25 - 50 mm
K-13282-00-0-*

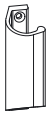

Pull handle outside
9-22921-00-0-*

[1] = More turn handles see part 3 of the present order catalogue.
[2] = Tested to DIN V EN V 1627 for resistance to pull-off and twist-off attempts at 100 Nm.

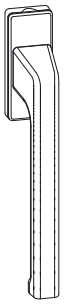

DIRIGENT-HL
elongated
Rosette 32 x 81 mm
Spindle 25 6-31382-25-0-*
Spindle 29 6-31382-29-0-*

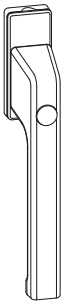

DIRIGENT-HL
elongated
Rosette 32 x 81 mm
push button cylinder
Spindle 30 6-31383-30-0-*

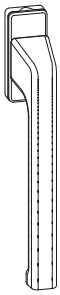

DIRIGENT-HL
elongated
Rosette 28 x 67 mm
Spindle 33 6-32629-33-0-*

Mill-in gears

Mill-in gear 180°
Backset 14 mm
6-31280-00-0-1

Mill-in gear 180°

6-25916--0-1**

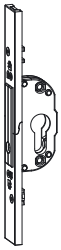

Lock
with cylinder bore
6-25918--0-1**

**** = Sizes**
25, 30, 35, 40, 45, 50

Stay G.U-oZ – adjustable

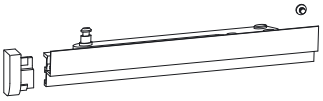

End cap
left 9-34517-00-L-*
right 9-34517-00-R-*

Stay G.U-oZ – adjustable
6-26274--0-1**
Screw , nut

Cover rail P 1481
9-34520--0-***

Fitting requirements according to size of sashes for schemes A to K

Quantity A	C	D	G	K	Description	PU	Article No.
1	2	1	1	2	**Bag of stay G.U-oZ** [1]		
					Contents		
					1 Stay G.U-oZ, adjustable		
					1 Bag of Screws		
					1 Cover rail P 1481		
					1 End cap for P 1481, left		
					1 End cap for P 1481, right		
					SW		
					600- 850	1	K-14132-20-0-*
					851-1100	1	K-14132-25-0-*
					1101-1350	1	K-14132-30-0-*
					1351-1600	1	K-14132-35-0-*

[1] * = Colour: 1 = EV 1, 5 = UC 5, 7 = white (RAL 9016)

Working drawing
G.U-968/150 oZ 0-43981

Positioning and locking plates according to frame groove – Euro groove 15/20

Description	Gasket pressure	Illustration	**Frame groove 14/18** 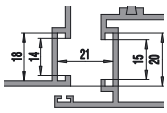	**12/15** 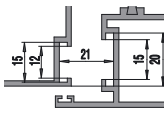	**10/14** 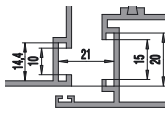
Locking plate Frame profiles clampable	standard + 0,7 mm		6-30959-00-0-1 6-30959-01-0-1	6-30959-00-0-1 6-30959-01-0-1	6-30959-00-0-1 6-30959-01-0-1
Locking plate Frame profiles clampable	adjustable		G-11071-00-0-1	G-11800-00-0-1	G-11065-00-0-1
Positioning plate Frame profiles			6-25587-03-0-1	6-25587-02-0-1	6-25587-01-0-1

Positioning and locking plates according to profile system – G.U-968/200 mZ

Profile systems Aluminium	Sash profile	Frame profile	Mullion profile		Working drawing G.U-968/200 mZ	Positioning plate	Locking plate	Wrong operation safety device (WOSD)
Akotherm AT 730	2551	2502			0-44709-1	6-25587-02-0-1	6-28734-12-0-1	K-17192-02-0-1
Alcoa RT 67/RT 72	770 145/146	770 006/090			0-43865-1	6-25587-01-0-1	6-28734-10-0-1	K-17192-01-0-1
Aliplast Imperial	IP023	IP012			0-44709-1	6-25587-03-0-1	6-28734-14-0-1	K-17192-02-0-1
Aliplast Visoline	VL 21	VL 18	VL 26		0-44709-1	6-25587-03-0-1	6-28734-14-0-1	K-17192-02-0-1
Graute-Therm 80					0-44709-1	6-25587-01-0-1	6-28734-10-0-1	K-17192-02-0-1
Hartmann Systherm 72E					0-43827-2	9-29990-05-0-1	9-30146-05-0-1	
Heroal Serie 065	9302	9324			0-44709-1	6-25587-01-0-1	6-28734-10-0-1	K-17192-02-0-1
Hueck 1.0						6-25071-00-0-1		K-17192-03-0-1
Klauke	78145	78010			0-44709-1	6-25587-03-0-1	G-15059-00-0-1	K-17192-02-0-1
Reynaers					0-44709-1	6-25587-03-0-1	6-28734-14-0-1	
Sykon Sykotherm 64	6332	6329	6331		0-44709-1	6-25587-01-0-1	6-28734-10-0-1	K-17192-02-0-1
Wicona Wicline 65/77						6-25587-04-0-1		K-17192-09-0-1

Positioning and locking plates according to profile system – G.U-968/150 oZ, G.U-90 oZ

Profile systems Aluminium	Sash profile	Frame profile	Mullion profile	False mullion profile	Working drawing G.U-968/150 oZ	Positioning plate	Locking plate adjustable clampable	Locking plate fix clampable
Alcan Serie Contact	4002 D	4002 D	4029 F		F-41949-1	9-29990-24-0-1	G-11800-00-0-1	6-30959-00-0-1
Alcoa RT 620	717 833	717 833	717 845			9-29990-23-0-1		
Alisol 3	V 63215	V 63215	V 63207		0-41081-2	6-25587-03-0-1	G-11071-00-0-1	6-30959-00-0-1
Alsec 2000 Serie 59	46960-85	46960-85	52533-73		0-42657-2	6-25587-03-0-1	G-11071-00-0-1	6-30959-00-0-1
Alu A.M.C. GN 50	50/230	50/230				6-25587-03-0-1	G-11071-00-0-1	6-30959-00-0-1
Bug 90	831 614	831 614			0-42236-2	6-25587-01-0-1	G-11065-00-0-1	6-30959-00-0-1
Egybel	901 010	901 010	901 042	901 080		6-25587-03-0-1	G-11071-00-0-1	6-30959-00-0-1
EurAl Serie 65	161 100	161 100				6-25587-03-0-1	G-11071-00-0-1	6-30959-00-0-1
Forster (Stahl)	505.665	505.665			0-41041-1	9-30163-18-0-1		9-30147-00-0-1
Hueck 2.1	556 103	556 103				6-25071-00-0-1		
Metra Serie 65	165 130	165 130				6-25587-06-0-1		6-28734-13-0-1
MKF TKI 602	602-01-015	602-01-015	602-03-002			6-25071-00-0-1		
Pechiney	N 113311	N 113311	N 113320	N 113352	0-42763-1	6-25587-01-0-1	G-15067-00-0-1	6-30959-00-0-1
Philippi 2000						6-25597-03-0-1	G-15059-00-0-1	
Reynaers						6-25587-03-0-1	G-11071-00-0-1	6-30959-00-0-1
SAPA-Ekonal i70	42003	42003	42531		0-41062-1	9-29990-24-0-1	G-11800-00-0-1	6-30959-00-0-1
Schüco Royal 64w	104 610	104 610	104 620		0-42562-1	9-29990-03-0-1		9-30146-03-0-1
Schüco Royal S 65/ S 55	166 030	166 030	166 070		0-43290-1	9-29990-03-0-1		9-30146-03-0-1
Sidal nc 60 S	863	863	878		0-41777-4	9-29990-24-0-1	G-11800-00-0-1	6-30959-00-0-1
SMS Serie 46000	46493	46493	46511			6-25587-01-0-1	G-11065-00-0-1	6-30959-00-0-1
Systemes (F)					0-42578-4	9-29990-14-0-1	G-15095-00-0-1	6-30959-00-0-1
Wernal System 6000					0-40937-4	9-29990-14-0-1	G-11071-00-0-1	6-30959-00-0-1
Wicline 60					0-42863-1	6-25587-04-0-1		
Wicona Wicline 77/65	1011202	1011202	1011301	1011350	0-44115-1	6-33442-00-0-1		

Doors and windows with geared handle inside for sash profiles with euro groove 15/20 mm

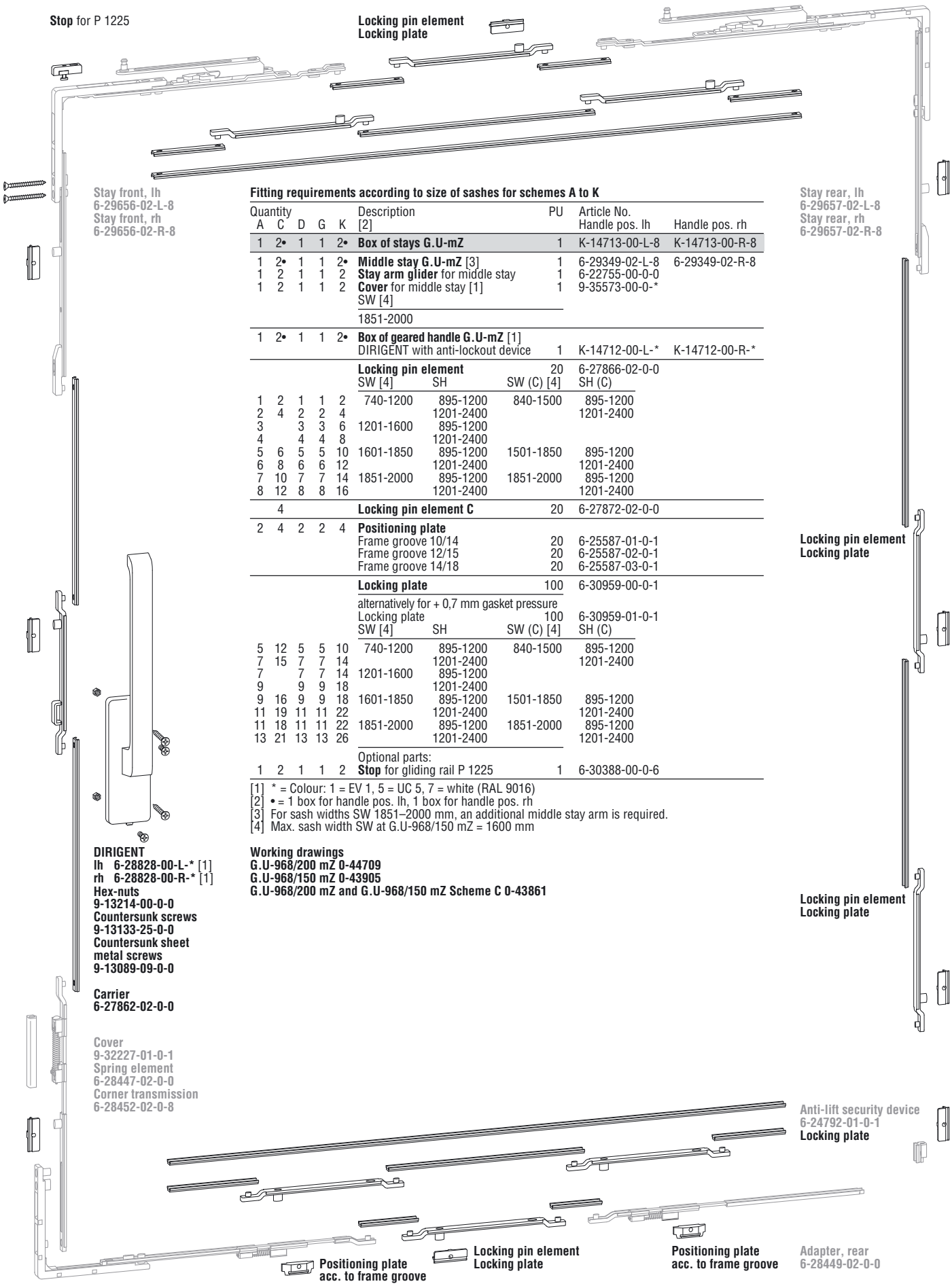

Fitting requirements according to size of sashes for schemes A to K

Quantity A	C	D	G	K	Description [2]	PU	Article No. Handle pos. lh	Handle pos. rh
1	2•	1	1	2•	**Box of stays G.U-mZ**	1	K-14713-00-L-8	K-14713-00-R-8
1	2•	1	1	2•	**Middle stay G.U-mZ** [3]	1	6-29349-02-L-8	6-29349-02-R-8
1	2	1	1	2	**Stay arm glider** for middle stay	1	6-22755-00-0-0	
1	2	1	1	2	**Cover** for middle stay [1]	1	9-35573-00-0-*	
					SW [4]			
					1851-2000			
1	2•	1	1	2•	**Box of geared handle G.U-mZ** [1] DIRIGENT with anti-lockout device	1	K-14712-00-L-*	K-14712-00-R-*
					Locking pin element	20	6-27866-02-0-0	

A	C	D	G	K	SW [4]	SH	SW (C) [4]	SH (C)
1	2	1	1	2	740-1200	895-1200	840-1500	895-1200
2	4	2	2	4		1201-2400		1201-2400
3		3	3	6	1201-1600	895-1200		
4		4	4	8		1201-2400		
5	6	5	5	10	1601-1850	895-1200	1501-1850	895-1200
6	8	6	6	12		1201-2400		1201-2400
7	10	7	7	14	1851-2000	895-1200	1851-2000	895-1200
8	12	8	8	16		1201-2400		1201-2400

	4				**Locking pin element C**	20	6-27872-02-0-0	
2	4	2	2	4	**Positioning plate**			
					Frame groove 10/14	20	6-25587-01-0-1	
					Frame groove 12/15	20	6-25587-02-0-1	
					Frame groove 14/18	20	6-25587-03-0-1	
					Locking plate	100	6-30959-00-0-1	
					alternatively for + 0,7 mm gasket pressure			
					Locking plate	100	6-30959-01-0-1	

A	C	D	G	K	SW [4]	SH	SW (C) [4]	SH (C)
5	12	5	5	10	740-1200	895-1200	840-1500	895-1200
7	15	7	7	14		1201-2400		1201-2400
7		7	7	14	1201-1600	895-1200		
9		9	9	18		1201-2400		
9	16	9	9	18	1601-1850	895-1200	1501-1850	895-1200
11	19	11	11	22		1201-2400		1201-2400
11	18	11	11	22	1851-2000	895-1200	1851-2000	895-1200
13	21	13	13	26		1201-2400		1201-2400

					Optional parts:		
1	2	1	1	2	**Stop** for gliding rail P 1225	1	6-30388-00-0-6

[1] * = Colour: 1 = EV 1, 5 = UC 5, 7 = white (RAL 9016)
[2] • = 1 box for handle pos. lh, 1 box for handle pos. rh
[3] For sash widths SW 1851–2000 mm, an additional middle stay arm is required.
[4] Max. sash width SW at G.U-968/150 mZ = 1600 mm

Working drawings
G.U-968/200 mZ 0-44709
G.U-968/150 mZ 0-43905
G.U-968/200 mZ and G.U-968/150 mZ Scheme C 0-43861

Doors and windows with lockable gear, for sash profiles with euro groove 15/20 mm

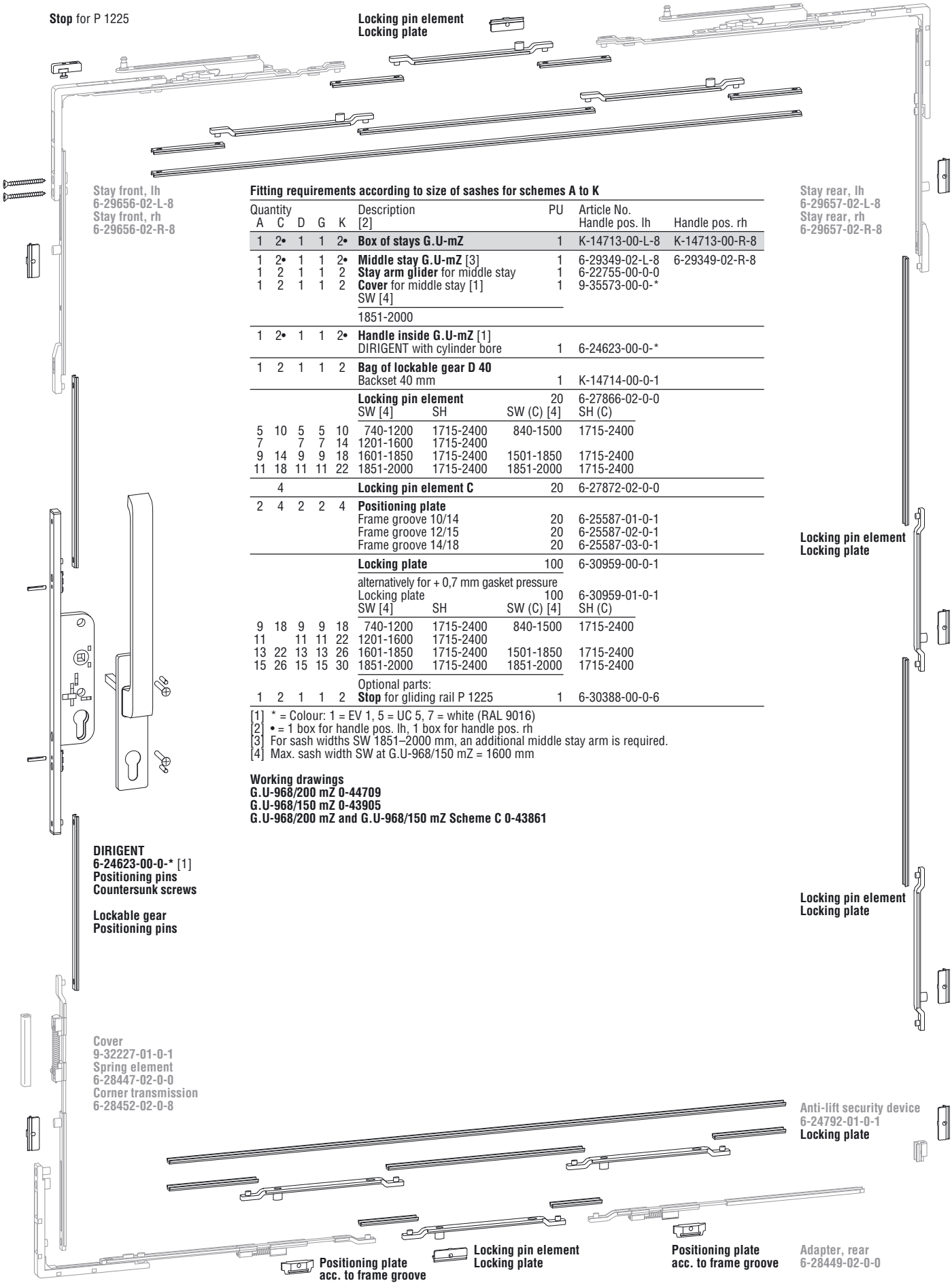

Fitting requirements according to size of sashes for schemes A to K

Quantity A	C	D	G	K	Description [2]	PU	Article No. Handle pos. lh	Handle pos. rh
1	2•	1	1	2•	**Box of stays G.U-mZ**	1	K-14713-00-L-8	K-14713-00-R-8
1	2•	1	1	2•	**Middle stay G.U-mZ** [3]	1	6-29349-02-L-8	6-29349-02-R-8
1	2	1	1	2	**Stay arm glider** for middle stay	1	6-22755-00-0-0	
1	2	1	1	2	**Cover** for middle stay [1]	1	9-35573-00-0-*	
					SW [4]			
					1851-2000			
1	2•	1	1	2•	**Handle inside G.U-mZ** [1]			
					DIRIGENT with cylinder bore	1	6-24623-00-0-*	
1	2	1	1	2	**Bag of lockable gear D 40**			
					Backset 40 mm	1	K-14714-00-0-1	
					Locking pin element	20	6-27866-02-0-0	
					SW [4] / SH	SW (C) [4]	SH (C)	
5	10	5	5	10	740-1200 / 1715-2400	840-1500	1715-2400	
7		7	7	14	1201-1600 / 1715-2400			
9	14	9	9	18	1601-1850 / 1715-2400	1501-1850	1715-2400	
11	18	11	11	22	1851-2000 / 1715-2400	1851-2000	1715-2400	
	4				**Locking pin element C**	20	6-27872-02-0-0	
2	4	2	2	4	**Positioning plate**			
					Frame groove 10/14	20	6-25587-01-0-1	
					Frame groove 12/15	20	6-25587-02-0-1	
					Frame groove 14/18	20	6-25587-03-0-1	
					Locking plate	100	6-30959-00-0-1	
					alternatively for + 0,7 mm gasket pressure			
					Locking plate	100	6-30959-01-0-1	
					SW [4] / SH	SW (C) [4]	SH (C)	
9	18	9	9	18	740-1200 / 1715-2400	840-1500	1715-2400	
11		11	11	22	1201-1600 / 1715-2400			
13	22	13	13	26	1601-1850 / 1715-2400	1501-1850	1715-2400	
15	26	15	15	30	1851-2000 / 1715-2400	1851-2000	1715-2400	
					Optional parts:			
1	2	1	1	2	**Stop** for gliding rail P 1225	1	6-30388-00-0-6	

[1] * = Colour: 1 = EV 1, 5 = UC 5, 7 = white (RAL 9016)
[2] • = 1 box for handle pos. lh, 1 box for handle pos. rh
[3] For sash widths SW 1851–2000 mm, an additional middle stay arm is required.
[4] Max. sash width SW at G.U-968/150 mZ = 1600 mm

Working drawings
G.U-968/200 mZ 0-44709
G.U-968/150 mZ 0-43905
G.U-968/200 mZ and G.U-968/150 mZ Scheme C 0-43861

Doors and windows with geared handle inside for sash profiles with euro groove 15/20 mm

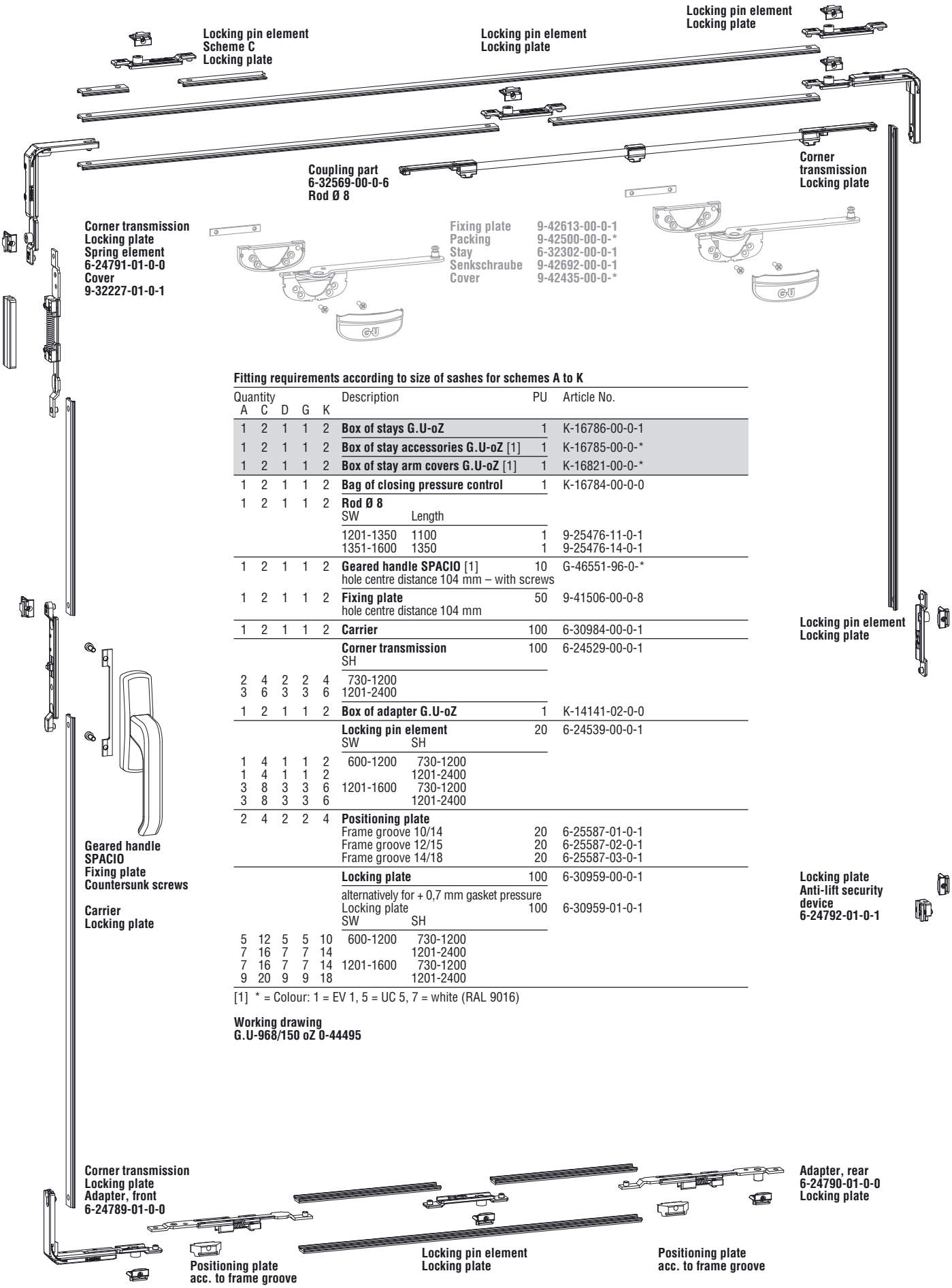

Fitting requirements according to size of sashes for schemes A to K

Quantity A	C	D	G	K	Description	PU	Article No.
1	2	1	1	2	**Box of stays G.U-oZ**	1	K-16786-00-0-1
1	2	1	1	2	**Box of stay accessories G.U-oZ** [1]	1	K-16785-00-0-*
1	2	1	1	2	**Box of stay arm covers G.U-oZ** [1]	1	K-16821-00-0-*
1	2	1	1	2	**Bag of closing pressure control**	1	K-16784-00-0-0
1	2	1	1	2	**Rod Ø 8**		
					SW / Length		
					1201-1350 / 1100	1	9-25476-11-0-1
					1351-1600 / 1350	1	9-25476-14-0-1
1	2	1	1	2	**Geared handle SPACIO** [1]	10	G-46551-96-0-*
					hole centre distance 104 mm – with screws		
1	2	1	1	2	**Fixing plate**	50	9-41506-00-0-8
					hole centre distance 104 mm		
1	2	1	1	2	**Carrier**	100	6-30984-00-0-1
					Corner transmission	100	6-24529-00-0-1
					SH		
2	4	2	2	4	730-1200		
3	6	3	3	6	1201-2400		
1	2	1	1	2	**Box of adapter G.U-oZ**	1	K-14141-02-0-0
					Locking pin element	20	6-24539-00-0-1
					SW / SH		
1	4	1	1	2	600-1200 / 730-1200		
1	4	1	1	2	1201-2400		
3	8	3	3	6	1201-1600 / 730-1200		
3	8	3	3	6	1201-2400		
2	4	2	2	4	**Positioning plate**		
					Frame groove 10/14	20	6-25587-01-0-1
					Frame groove 12/15	20	6-25587-02-0-1
					Frame groove 14/18	20	6-25587-03-0-1
					Locking plate	100	6-30959-00-0-1
					alternatively for + 0,7 mm gasket pressure		
					Locking plate	100	6-30959-01-0-1
					SW / SH		
5	12	5	5	10	600-1200 / 730-1200		
7	16	7	7	14	1201-2400		
7	16	7	7	14	1201-1600 / 730-1200		
9	20	9	9	18	1201-2400		

[1] * = Colour: 1 = EV 1, 5 = UC 5, 7 = white (RAL 9016)

Working drawing
G.U-968/150 oZ 0-44495

Doors and windows with mill-in gear and lock with cylinder bore, for sash profiles with euro groove 15/20 mm

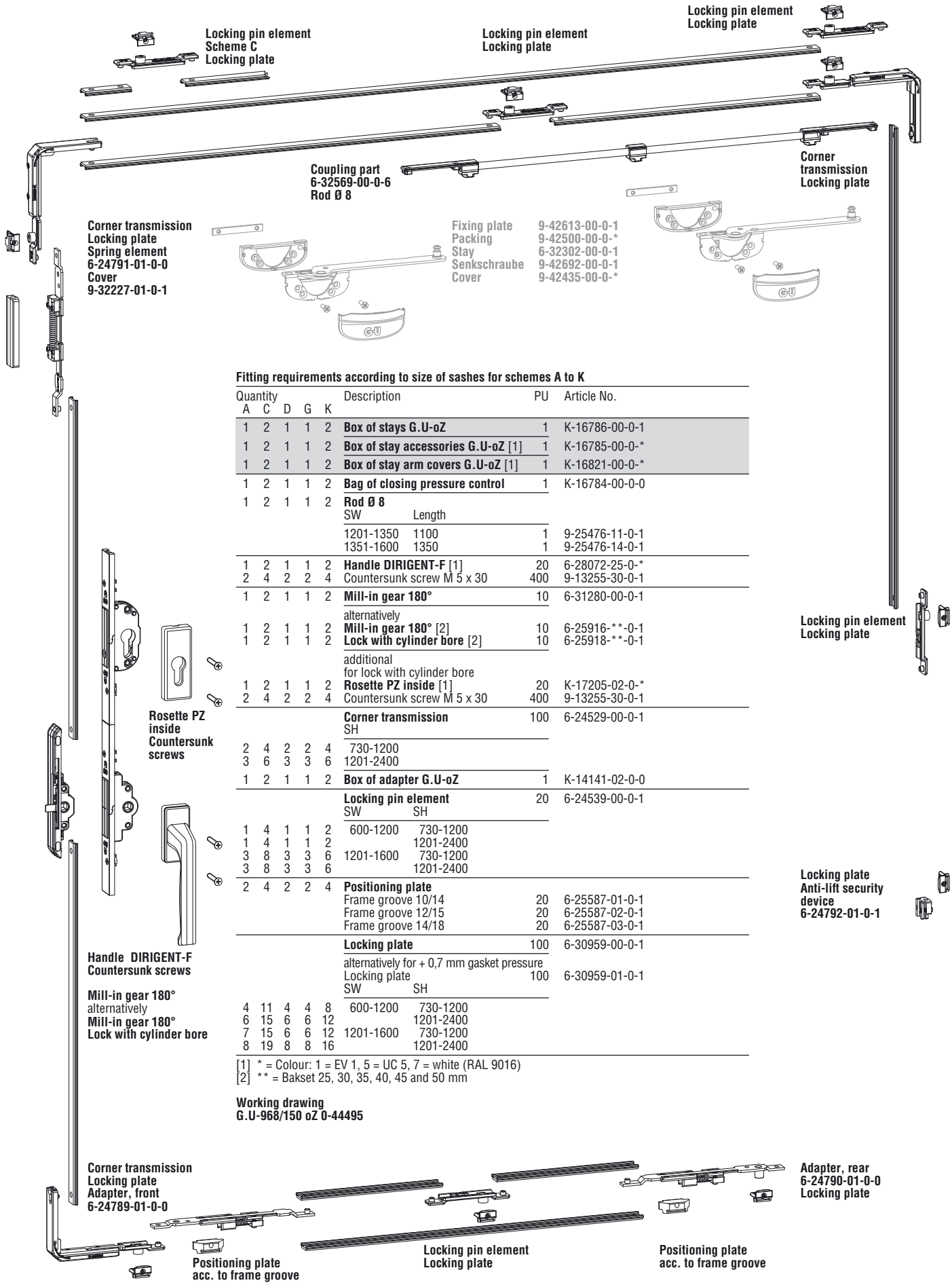

Fitting requirements according to size of sashes for schemes A to K

Quantity A	C	D	G	K	Description		PU	Article No.
1	2	1	1	2	**Box of stays G.U-oZ**		1	K-16786-00-0-1
1	2	1	1	2	**Box of stay accessories G.U-oZ** [1]		1	K-16785-00-0-*
1	2	1	1	2	**Box of stay arm covers G.U-oZ** [1]		1	K-16821-00-0-*
1	2	1	1	2	**Bag of closing pressure control**		1	K-16784-00-0-0
1	2	1	1	2	**Rod Ø 8**			
					SW	Length		
					1201-1350	1100	1	9-25476-11-0-1
					1351-1600	1350	1	9-25476-14-0-1
1	2	1	1	2	**Handle DIRIGENT-F** [1]		20	6-28072-25-0-*
2	4	2	2	4	Countersunk screw M 5 x 30		400	9-13255-30-0-1
1	2	1	1	2	**Mill-in gear 180°**		10	6-31280-00-0-1
					alternatively			
1	2	1	1	2	**Mill-in gear 180°** [2]		10	6-25916-**-0-1
1	2	1	1	2	**Lock with cylinder bore** [2]		10	6-25918-**-0-1
					additional for lock with cylinder bore			
1	2	1	1	2	**Rosette PZ inside** [1]		20	K-17205-02-0-*
2	4	2	2	4	Countersunk screw M 5 x 30		400	9-13255-30-0-1
					Corner transmission		100	6-24529-00-0-1
					SH			
2	4	2	2	4	730-1200			
3	6	3	3	6	1201-2400			
1	2	1	1	2	**Box of adapter G.U-oZ**		1	K-14141-02-0-0
					Locking pin element		20	6-24539-00-0-1
					SW	SH		
1	4	1	1	2	600-1200	730-1200		
1	4	1	1	2		1201-2400		
3	8	3	3	6	1201-1600	730-1200		
3	8	3	3	6		1201-2400		
2	4	2	2	4	**Positioning plate**			
					Frame groove 10/14		20	6-25587-01-0-1
					Frame groove 12/15		20	6-25587-02-0-1
					Frame groove 14/18		20	6-25587-03-0-1
					Locking plate		100	6-30959-00-0-1
					alternatively for + 0,7 mm gasket pressure			
					Locking plate		100	6-30959-01-0-1
					SW	SH		
4	11	4	4	8	600-1200	730-1200		
6	15	6	6	12		1201-2400		
7	15	6	6	12	1201-1600	730-1200		
8	19	8	8	16		1201-2400		

[1] * = Colour: 1 = EV 1, 5 = UC 5, 7 = white (RAL 9016)
[2] ** = Bakset 25, 30, 35, 40, 45 and 50 mm

Working drawing
G.U-968/150 oZ 0-44495

Doors and windows with geared handle inside for sash profiles with euro groove 15/20 mm

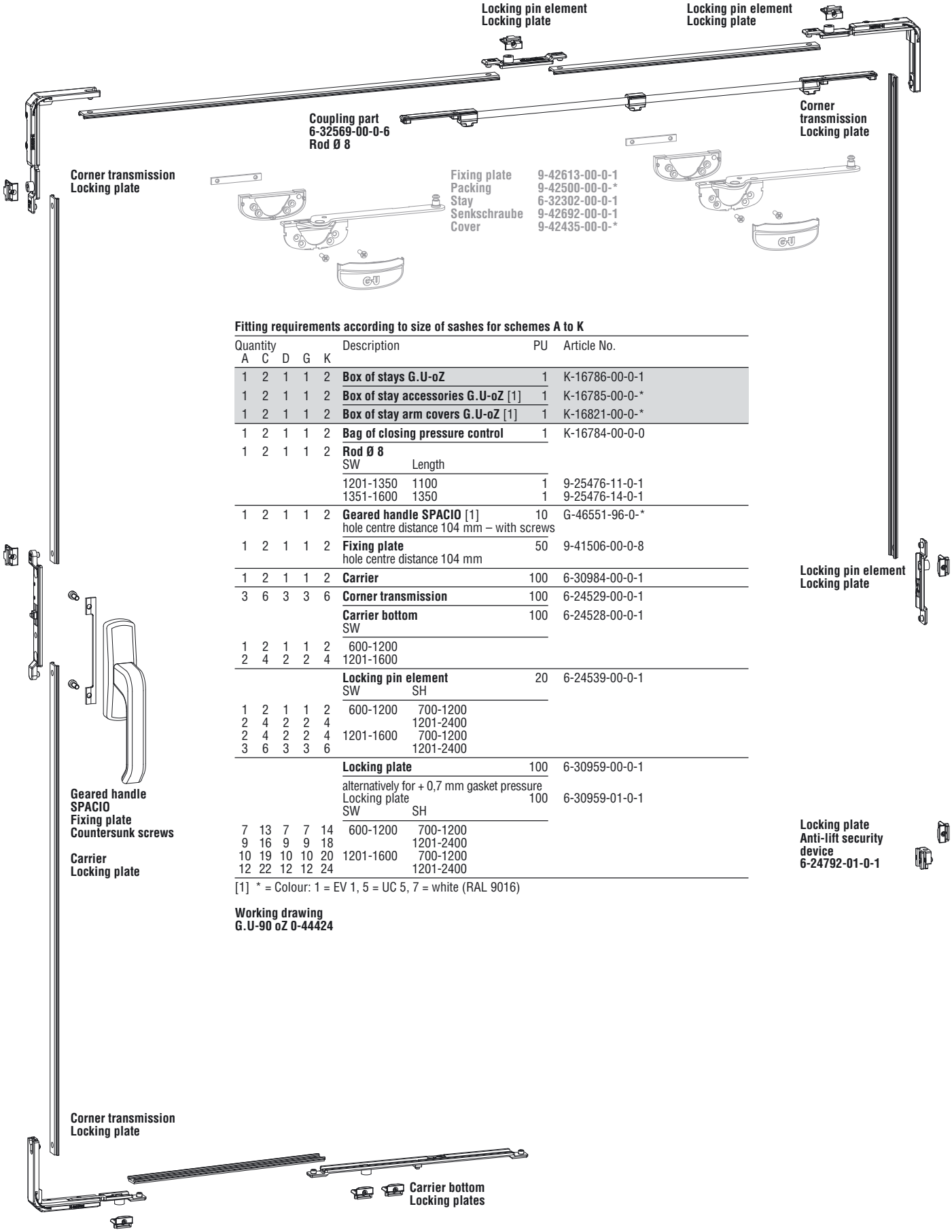

Fitting requirements according to size of sashes for schemes A to K

Quantity A	C	D	G	K	Description		PU	Article No.
1	2	1	1	2	**Box of stays G.U-oZ**		1	K-16786-00-0-1
1	2	1	1	2	**Box of stay accessories G.U-oZ** [1]		1	K-16785-00-0-*
1	2	1	1	2	**Box of stay arm covers G.U-oZ** [1]		1	K-16821-00-0-*
1	2	1	1	2	**Bag of closing pressure control**		1	K-16784-00-0-0
1	2	1	1	2	**Rod Ø 8**			
					SW	Length		
					1201-1350	1100	1	9-25476-11-0-1
					1351-1600	1350	1	9-25476-14-0-1
1	2	1	1	2	**Geared handle SPACIO** [1]		10	G-46551-96-0-*
					hole centre distance 104 mm – with screws			
1	2	1	1	2	**Fixing plate**		50	9-41506-00-0-8
					hole centre distance 104 mm			
1	2	1	1	2	**Carrier**		100	6-30984-00-0-1
3	6	3	3	6	**Corner transmission**		100	6-24529-00-0-1
					Carrier bottom		100	6-24528-00-0-1
					SW			
1	2	1	1	2	600-1200			
2	4	2	2	4	1201-1600			
					Locking pin element		20	6-24539-00-0-1
					SW	SH		
1	2	1	1	2	600-1200	700-1200		
2	4	2	2	4		1201-2400		
2	4	2	2	4	1201-1600	700-1200		
3	6	3	3	6		1201-2400		
					Locking plate		100	6-30959-00-0-1
					alternatively for + 0,7 mm gasket pressure			
					Locking plate		100	6-30959-01-0-1
					SW	SH		
7	13	7	7	14	600-1200	700-1200		
9	16	9	9	18		1201-2400		
10	19	10	10	20	1201-1600	700-1200		
12	22	12	12	24		1201-2400		

[1] * = Colour: 1 = EV 1, 5 = UC 5, 7 = white (RAL 9016)

Working drawing
G.U-90 oZ 0-44424

Doors and windows with mill-in gear and lock with cylinder bore, for sash profiles with euro groove 15/20 mm

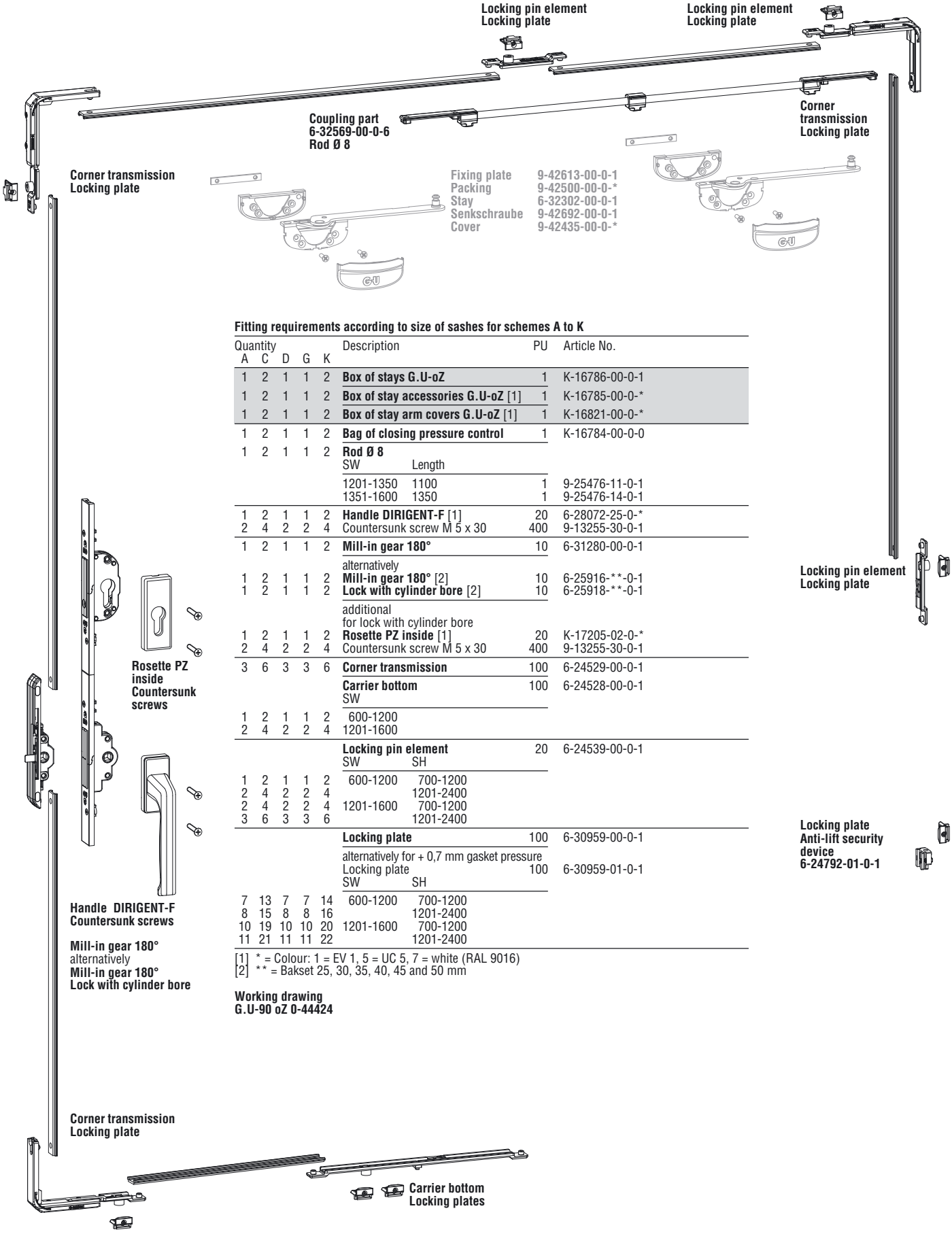

Fitting requirements according to size of sashes for schemes A to K

Quantity A	C	D	G	K	Description		PU	Article No.
1	2	1	1	2	**Box of stays G.U-oZ**		1	K-16786-00-0-1
1	2	1	1	2	**Box of stay accessories G.U-oZ** [1]		1	K-16785-00-0-*
1	2	1	1	2	**Box of stay arm covers G.U-oZ** [1]		1	K-16821-00-0-*
1	2	1	1	2	**Bag of closing pressure control**		1	K-16784-00-0-0
1	2	1	1	2	**Rod Ø 8**			
					SW	Length		
					1201-1350	1100	1	9-25476-11-0-1
					1351-1600	1350	1	9-25476-14-0-1
1	2	1	1	2	**Handle DIRIGENT-F** [1]		20	6-28072-25-0-*
2	4	2	2	4	Countersunk screw M 5 x 30		400	9-13255-30-0-1
1	2	1	1	2	**Mill-in gear 180°**		10	6-31280-00-0-1
					alternatively			
1	2	1	1	2	**Mill-in gear 180°** [2]		10	6-25916-**-0-1
1	2	1	1	2	**Lock with cylinder bore** [2]		10	6-25918-**-0-1
					additional for lock with cylinder bore			
1	2	1	1	2	**Rosette PZ inside** [1]		20	K-17205-02-0-*
2	4	2	2	4	Countersunk screw M 5 x 30		400	9-13255-30-0-1
3	6	3	3	6	**Corner transmission**		100	6-24529-00-0-1
					Carrier bottom		100	6-24528-00-0-1
					SW			
1	2	1	1	2	600-1200			
2	4	2	2	4	1201-1600			
					Locking pin element		20	6-24539-00-0-1
					SW	SH		
1	2	1	1	2	600-1200	700-1200		
2	4	2	2	4		1201-2400		
2	4	2	2	4	1201-1600	700-1200		
3	6	3	3	6		1201-2400		
					Locking plate		100	6-30959-00-0-1
					alternatively for + 0,7 mm gasket pressure Locking plate		100	6-30959-01-0-1
					SW	SH		
7	13	7	7	14	600-1200	700-1200		
8	15	8	8	16		1201-2400		
10	19	10	10	20	1201-1600	700-1200		
11	21	11	11	22		1201-2400		

[1] * = Colour: 1 = EV 1, 5 = UC 5, 7 = white (RAL 9016)
[2] ** = Bakset 25, 30, 35, 40, 45 and 50 mm

Working drawing
G.U-90 oZ 0-44424

Doors and windows with sash width SW up to 2000 mm and sash weight up to 200 kg – euro groove 15/20 mm

End cap 9-34523-00-0-*
Gliding rail P 1225
Cover rail P 1480

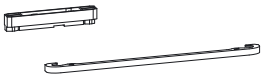

Stay arm glider 6-22755-00-0-0
Stay arm cover 9-35573-00-0-*

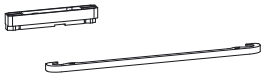

Gliding rail P 1225
End cap 9-34523-00-0-*
Cover rail P 1480

Fitting requirements according to size of sashes for schemes A to K

Quantity A	C	D	G	K	Description [2]	PU	Article No. Handle pos. lh	Handle pos. rh
1	2•	1	1	2•	**Box of runners G.U-968/200** Contents	1	K-15268-00-L-0	K-15268-00-R-0
					1 Runner, front 1 Runner, rear			
		1			**Positioning pin D** for control part	1	9-39897-00-0-1	
1	2	1	1	2	**Bag of profiles G.U-968/200** [1] Contents			
					1 Rod Ø 10 mm 1 Gliding rail P 1225 1 Running rail P 1213 1 Cover rail P 1480 1 Cover rail P 1603 1 Box of accessories			
					SW			
					740- 850	1	K-15269-20-0-*	
					851-1100	1	K-15269-25-0-*	
					1101-1350	1	K-15269-30-0-*	
					1351-1600	1	K-15269-35-0-*	
					1601-1850	1	K-15269-40-0-*	
					1851-2000	1	K-15269-45-0-*	

[1] * = Colour: 1 = EV 1, 5 = UC 5, 7 = white (RAL 9016)
[2] • = 1 box for handle pos. lh, 1 box for handle pos. rh

Note for G.U-968/200 mZ:
For sashes with heavy glazing, tandem runners are required.

Working drawings
G.U-968/200 mZ 0-44709
G.U-968/200 mZ Scheme C 0-43861

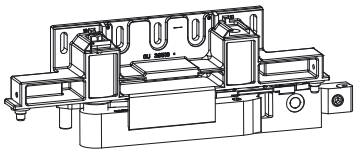

Runner, front lh 6-32332-00-L-0
rh 6-32332-00-R-0

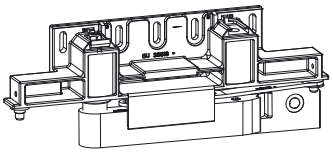

Runner, rear lh 6-29557-00-L-0
rh 6-29557-00-R-0

Cover rail P 1603

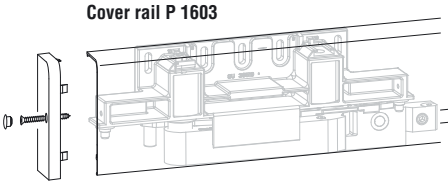

Cover 9-26687-00-0-*
Countersunk screw 9-13151-38-0-0
End cap 9-38520-00-L-*

Support
9-38527-00-0-0

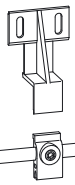

Rod Ø 10 mm
Guide 6-29750-00-0-1

Cover rail P 1603

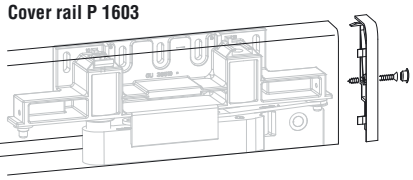

End cap 9-38520-00-R-*
Countersunk screw 9-13151-38-0-0
Cover 9-26687-00-0-*

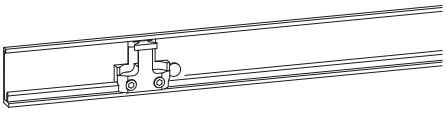

Running rail P 1213
Control part 6-33328-00-0-*
Positioning pin D for control part

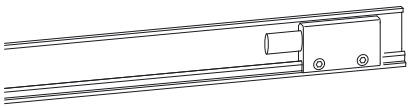

Running rail P 1213
Spring-loaded buffer 6-29564-00-0-*

Doors and windows with sash width SW up to 1600 mm and sash weight up to 150 kg – euro groove 15/20 mm

End cap 9-34523-00-0-*
Gliding rail P 1225
Cover rail P 1480

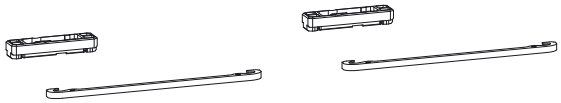

Stay arm glider 6-22755-00-0-0
Stay arm cover 9-35573-00-0-*

Gliding rail P 1225
End cap 9-34523-00-0-*
Cover rail P 1480

Fitting requirements according to size of sashes for schemes A to K

Quantity A	C	D	G	K	Description [2]	PU	Article No. Handle pos. lh	Handle pos. rh
1	2•	1	1	2•	**Box of runners G.U-968/200** Contents	1	K-15278-00-L-0	K-15278-00-R-0
					1 Runner, front 1 Runner, rear			
		1			**Positioning pin D** for control part	1	9-39897-00-0-1	
1	2	1	1	2	**Bag of profiles G.U-968/150** [1] Contents			
					1 Rod Ø 8 mm 1 Gliding rail P 1225 1 Running rail P 1300 1 Cover rail P 1480 1 Cover rail P 1608 1 Box of accessories			
					SW			
					600- 850	1	K-15279-20-0-*	
					851-1100	1	K-15279-25-0-*	
					1101-1350	1	K-15279-30-0-*	
					1351-1600	1	K-15279-35-0-*	

[1] * = Colour: 1 = EV 1, 5 = UC 5, 7 = white (RAL 9016)
[2] • = 1 box for handle pos. lh, 1 box for handle pos. rh

Working drawings
G.U-968/150 mZ 0-43905
G.U-968/150 mZ Scheme C 0-43861
G.U-968/150 oZ 0-44495

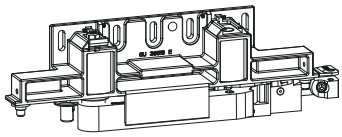

Runner, front lh 6-32545-00-L-0
rh 6-32545-00-R-0

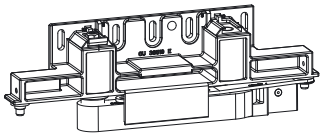

Runner, rear lh 6-29561-00-L-0
rh 6-29561-00-R-0

Cover rail P 1608

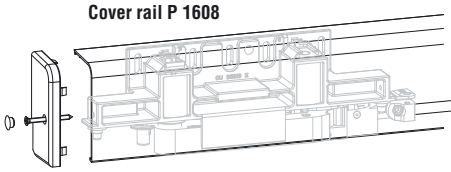

Cover 9-26687-00-0-*
Countersunk screw 9-13151-38-0-0
End cap 9-38543-00-L-*

Support
9-38527-00-0-0

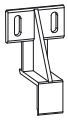

Rod Ø 8 mm
Guide 6-24764-00-0-1

Cover rail P 1608

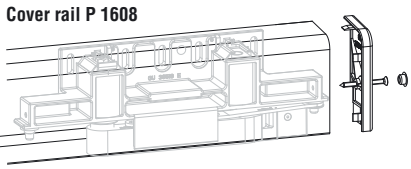

End cap 9-38543-00-R-*
Countersunk screw 9-13151-38-0-0
Cover 9-26687-00-0-*

Running rail P 1300
Control part 6-33329-00-0-*
Positioning pin D for control part

Running rail P 1300
Spring-loaded buffer 6-29565-00-0-*

Doors and windows with sash width SW up to 1600 mm and sash weight up to 90 kg – euro groove 15/20 mm

End cap 9-34523-00-0-*
Gliding rail P 1225
Cover rail P 1480

Stay arm glider 6-22755-00-0-0

Gliding rail P 1225
End cap 9-34523-00-0-*
Cover rail P 1480

Fitting requirements according to size of sashes for schemes A to K

Quantity A	C	D	G	K	Description [2]	PU	Article No. Handle pos. lh	Handle pos. rh
1	2•	1	1	2•	**Box of runners G.U-90** Contents	1	K-16656-00-L-0	K-16656-00-R-0
					1 Runner, front 1 Runner, rear			
1	2	1	1	2	**Bag of packings G.U-90** Contents	1	K-16657-00-0-6	
					2 Packings runner 2 Adapter sleeves for end caps 2 ABC Spax screws			
		1			**Positioning pin D** for control part	1	9-39897-00-0-1	
1	2	1	1	2	**Bag of profiles G.U-968/150** [1] Contents			
					1 Rod Ø 8 mm 1 Gliding rail P 1225 1 Running rail P 1300 1 Cover rail P 1480 1 Cover rail P 1608 1 Box of accessories			
					SW			
					600- 850	1	K-15279-20-0-*	
					851-1100	1	K-15279-25-0-*	
					1101-1350	1	K-15279-30-0-*	
					1351-1600	1	K-15279-35-0-*	

[1] * = Colour: 1 = EV 1, 5 = UC 5, 7 = white (RAL 9016)
[2] • = 1 box for handle pos. lh, 1 box for handle pos. rh

Working drawing
G.U-90 oZ 0-44424

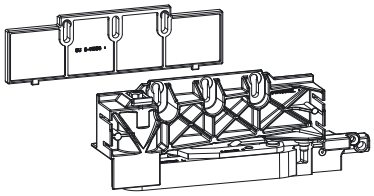

Packing runner 9-41596-00-0-6
Runner, front lh 6-32546-00-L-0
rh 6-32546-00-R-0

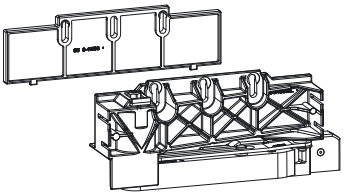

Packing runner 9-41596-00-0-6
Runner, rear lh 6-31759-00-L-0
rh 6-31759-00-R-0

Cover rail P 1608

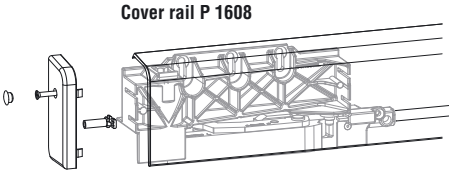

Cover 9-26687-00-0-*
ABC Spax screw H-00109-20-0-3
End cap 9-38543-00-L-*
Adapter sleeve 9-41597-01-0-6

Support
9-38527-00-0-0

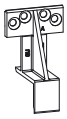

Rod Ø 8 mm
Guide 6-24764-00-0-1

Cover rail P 1608

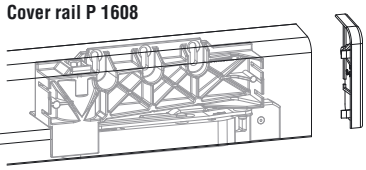

Adapter sleeve 9-41597-01-0-6
End cap 9-38543-00-R-*
ABC Spax screw H-00109-20-0-3
Cover 9-26687-00-0-*

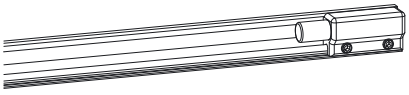

Running rail P 1300
Spring-loaded buffer 6-29565-00-0-*

Running rail P 1300
Control part 6-33329-00-0-*
Positioning pin D for control part

Parallel slide and tilt fittings G.U-968/200 mZ, G.U-968/150 mZ, G.U-968/150 oZ, G.U-90 oZ

Application	Description	PU	Article No.
G.U-968/200 mZ, G.U-968/150 mZ	**Aluminium windows and patio doors**		
Assembly of handles	Drilling jig for geared handle	1	6-28894-00-0-0
	Drilling jig for handle inside and handle both sides	1	6-24025-00-0-1
	Stop for drilling jigs 6-28894 and 6-24025	1	9-27406-00-0-1
	Drilling jig for lockable gear D 40 – euro groove 15/20 and Hueck	1	9-27272-01-0-0
Assembly of runners, stays, gliding and running rail	Drilling jig for runners and support	1	6-33342-00-0-0
	Drilling jig for corner transmission and stay – euro groove 15/20 and Hueck	1	6-28336-02-0-1
	Drilling jig for corner transmission and stay – Hartmann	1	6-28336-04-0-1
	Drilling jig for gliding and running rail	1	6-24696-00-0-1
	Drilling jig for stop pin (control part scheme D)	1	6-30447-00-0-0
	Positioning jig for gliding rail	1	6-23246-00-0-0
	Positioning jig for running rail	1	6-23241-00-0-0
G.U-968/150 oZ	**Aluminium windows and patio doors**		
Assembly of handles	Drilling jig for geared handle	1	6-25373-01-0-0
	Drilling jig for mill-in gear	1	6-26191-00-0-0
Assembly of runners, stays, gliding and running rail	Drilling jig for runners and support	1	6-33342-00-0-0
	Drilling jig for gliding and running rail	1	6-24696-00-0-1
	Drilling jig for stop pin (control part scheme D)	1	6-30447-00-0-0
	Positioning jig for gliding rail	1	6-23246-00-0-0
	Positioning jig for running rail	1	6-23241-00-0-0
G.U-90 oZ	**Aluminium windows and patio doors**		
Assembly of handles	Drilling jig for geared handle	1	6-25373-01-0-0
	Drilling jig for mill-in gear	1	6-26191-00-0-0
Assembly of runners, stays, gliding and running rail	Drilling jig for runners and support	1	9-30424-00-0-0
	Drilling jig for gliding and running rail	1	6-24696-00-0-1
	Drilling jig for stop pin (control part scheme D)	1	6-30447-00-0-0
	Positioning jig for gliding rail	1	6-23246-00-0-0
	Positioning jig for running rail	1	6-23241-00-0-0

Parallel slide and tilt fittings for aluminium windows and patio doors

Application

Range of applications for G.U parallel slide and tilt fittings:
– Parallel slide and tilt patio doors with 2 to 4 sashes
– Parallel slide and tilt windows with 2 to 4 sashes
each with running and gliding rails.

Locking mechanisms

Parallel slide and tilt locking mechanisms G.U-mZ
The locking mechanism G.U-mZ features one handle operation, forced control and an opening movement of 111 mm. Gear side with centre piece for geared handle or lockable gear with 30, 40, 45 or 50 mm backset prepared for the installation of a profile cylinder.
All locking parts are designed for fitting groove 16 mm. The locking pins of locking mechanism, stay arms and corner transmissions are adjustable. The clampable locking plates are adjustable to allow for optimum gasket pressure. From sash widths over 1101 mm and sash heights over 1371 mm , middle locks are used. Stay arms and corner transmissions are provided with rust-proof 4-leaf stainless steel springs.
G.U-968/200 mZ SRW 720-2000 mm [1], SRH 820-2370 mm
G.U-968/150 mZ SRW 720-1600 mm, SRH 820-2370 mm

Parallel slide and tilt locking mechanisms G.U-150 oZ and G.U-90 oZ
The locking mechanisms G.U-150 oZ and G.U-90 oZ feature one handle operation, forced control and an opening movement of 118 mm. Gear with 15 mm backset for handle DIRIGENT [2] or lockable gears with 25 to 50 mm backset prepared for the installation of a profile cylinder.
All locking parts are designed for fitting groove 16 mm. The locking pins of locking mechanism, stay arms and corner transmissions are adjustable. The clampable locking plates are adjustable to allow for optimum gasket pressure. From sash widths over 851 mm and sash heights over 751 mm , middle locks are used. Stay arms and corner transmissions are provided with rust-proof 4-leaf stainless steel springs.
SRW 640-1600 mm, SRH 700-2350 mm

Runners, profiles and accessories

Parallel slide and tilt fittings G.U-968/200
Parallel slide and tilt fittings with 4-wheel carriages and clamp fixed connecting rods for windows and patio doors with sash widths SW up to 2000 mm and sash weight up to 200 kg. Wheels made of fabric reinforced laminated plastic with ball bearing. Tandem runner for sashes with heavy glazing.
G.U-968/200 mZ Sash weight up to 200 kg

Parallel slide and tilt fittings G.U-968/150
Parallel slide and tilt fittings with 4-wheel carriages and clamp fixed connecting rods for windows and patio doors with sash widths SW up to 1600 mm and sash weight up to 150 or 130 kg. Wheels made of fabric reinforced laminated plastic with ball bearing.
G.U-968/150 mZ Sash weight up to 150 kg
G.U-968/150 oZ Sash weight up to 130 kg

Parallel slide and tilt fittings G.U-90
Parallel slide and tilt fittings with 4-wheel carriages and clamp fixed connecting rods for windows and patio doors with sash widths SW up to 1600 mm and sash weight up to 90 kg. Wheels made of fabric reinforced laminated plastic with ball bearing.
G.U-90 oZ Sash weight up to 90 kg

Positioning plates, locking plates

Frame profile specific positioning plates and locking plates according to table (see at the end of this catalogue chapter).

Drilling jigs, positioning jigs

Drilling jigs and other tools for hardware assembly are to be found at the end of this catalogue chapter and also in the respective working drawings.

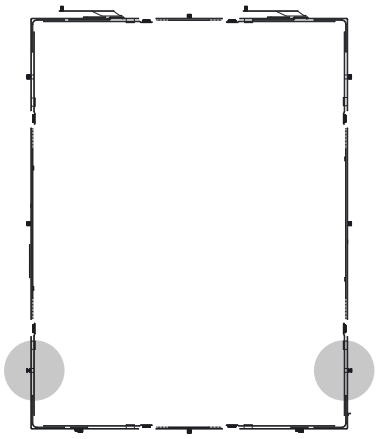

Locking mechanisms G.U-mZ

Basic security

2 Steel mushroom pin locking plates for corner transmissions
– standard security for PST locking mechanisms
– all other locking pins with standard locking plates made of zinc


Standard locking plates made of zinc


Mushroom pin locking plates Se made of steel

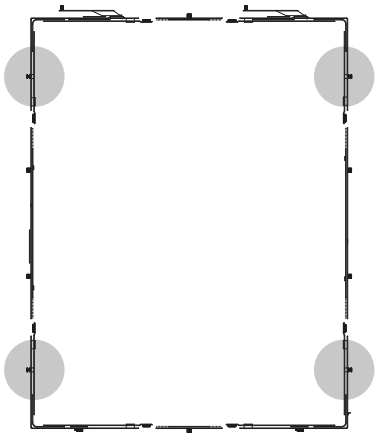

Enhanced basic security

4 Steel mushroom pin locking plates Se for corner transmissions and stays
– additional security for PST locking mechanisms
– all other locking pins with standard locking plates made of zinc


Standard locking plates made of zinc


Mushroom pin locking plates Se made of steel

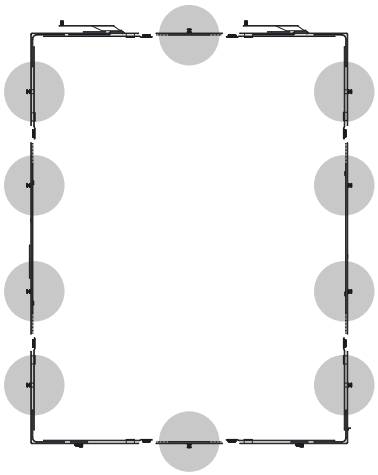

Tested security WK 2

All locking pins on corner transmissions, stays and centre pieces or gears with mushroom pin steel locking plates Se.
– Security "WK 2" to ENV 1627


Mushroom pin locking plates Se made of steel

[1] For SRW 1851-2000 mm, an middle stay arm is required.
[2] More turn handles see part 3 of the present order catalogue.

Parallel slide and tilt fittings for aluminium windows and patio doors

Turn handles DIRIGENT [1]

The handles are made of aluminium with concealed fixings. The rosettes have a robust retention feature and fixed cams. Lockable handles complete the programme.

Standard colours:

F 1/EV 1	silver colour	**dark brown**	dark brown (RAL 8022)
F 2/EV 2	new silver colour	**black**	black (RAL 9005)
F 3	gold colour	**white**	white (RAL 9016 or RAL 9010)
F 4	light brown		

[1] More turn handles see part 3 of the present order catalogue.

Standard handles

Standard version for parallel slide and tilt fittings G.U-966/200 mZ and G.U-966/150 mZ: geared handle with anti-lockout device;
standard version for parallel slide and tilt fittings G.U-966/150 oZ and G.U-90 oZ: turn handle DIRIGENT-F.

Running rails P 1213, P 1300, P 1585, P 1664

Aluminium running rails, suitable for use with parallel slide and tilt sashes with standard and special fittings.

Gliding rail P 1225

Aluminium gliding rail for parallel slide and tilt sashes (top guide), with stop on request.

Standard colours

Parallel slide and tilt fittings are supplied in the following standard colours:

EV 1	Visible aluminium parts anodized EV 1, cover profiles grey
UC 3	Visible aluminium parts anodized middle bronze, cover profiles middle brown
UC 5	Visible aluminium parts anodized dark bronze, cover profiles dark brown
white	Visible aluminium parts anodized EV 1, cover profiles white

Further colours and finishes on request.

Materials, surface sealing fer**GU**ard*silver

The fitting parts are made of high quality steel, zinc die-casting or aluminium alloys.
Depending on the material, they are protected against corrosion by surface sealing with fer**GU**ard*silver or by anodisation (aluminium parts).

Standard surface sealing of parallel slide and tilt fittings: fer**GU**ard*silver

All locking components of parallel slide and tilt fittings come with the surface sealing fer**GU**ard*silver.

Abbreviations

lh	left hand	ML	Middle lock
PU	Packing unit	PZ	Profile cylinder
rh	right hand	Se	Security fittings
SRH	Sash rebate height	SRW	Sash rebate width
ST	Sash thickness		

Profile system manufacturers' information

It is important to observe the product information issued by the profile system manufacturers, especially information concerning construction and fabrication, maximum sash dimensions and weights and material features such as linear expansion of profiles.

Dimension "Opening width"

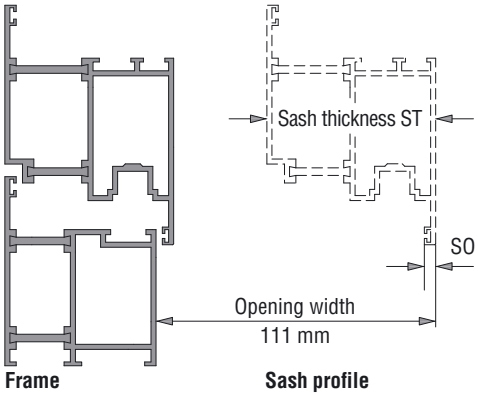

Maximum sash thickness ST

Side part as fixed glazing = 115 mm
Side part as side hung sash = 115 mm – thickness of sash overlap SO

Profile systems with 16 mm fitting groove

Profile manufacturer	Profile system	Sash overlap mm	Groove position mm	Fitting groove [1] undercut/plane	Frame groove	Frame groove Dim. A	Frame groove Dim. B
Alco	Alousystem 550	20,0	13,0	U	14/18	1,5	4,0
Almaco		18,0	9,0	U	14/18		
Alumil	M 11000	18,0	9,0	U	14/18	1,5	3,5
	M 11500	18,0	9,0	U	14/18	1,5	3,5
	M 20000	18,0	9,0	U	14/18	1,5	3,5
Aluminco		20,0	9,0	U	14/18	1,5	3,5
Domal	Bright PA70S	18,0	9,0	U	14/18	1,5	3,5
Elvial	4300	18,0	9,0	U	14/18	1,5	4,0
	4600	18,0	9,0	U	14/18	1,5	4,0
	5400	18,0	9,0	U	14/18	1,5	4,0
	5600	18,0	9,0	U	14/18	1,5	4,0
	5700	18,0	9,0	U	14/18	1,5	4,0
Europa	5000	18,0	9,0	U	14/18	1,5	3,5
Etem	E40	20,0	9,0	U	14/18	2,0	4,0
Exalco	Albio 109C	18,0	9,0	U	14/18	1,3	3,9
Heroal	065 / 065i / 065f	18,0	9,0	U	10/14	2,0	4,3
	090 / 090S	18,0	9,0	U	10/14	2,0	4,3
	110 ES	18,0	9,0	U	10/14	2,0	4,3
Kawneer	Kalory	20,0	9,0	U	10/14		4,0
Nordall	78TTF	18,0	9,0	U	14/18	1,5	3,5
Ponzio	Windstop 55TT	18,0	9,0	U	14/18	2,0	4,0
TS-Aluminium	65	18,0	9,0	P	14/18	2,0	4,0

[1] U = undercut, P = plane

Parallel slide and tilt fittings for aluminium windows and patio doors

Sash arrangement according to schemes A to K

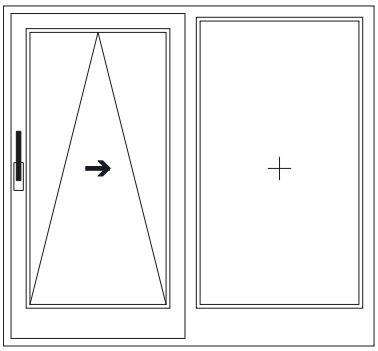

Scheme A – with mullion
1 parallel slide and tilt door, 1 fixed glazing
Drawing shows handle position lh

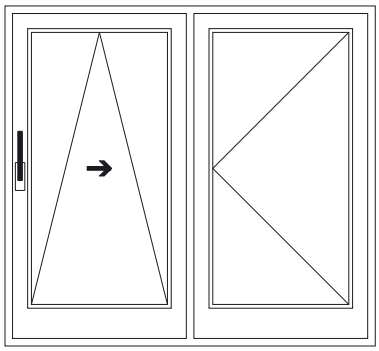

Scheme A – with mullion [1]
1 parallel slide and tilt door, 1 side hung door
Drawing shows handle position lh

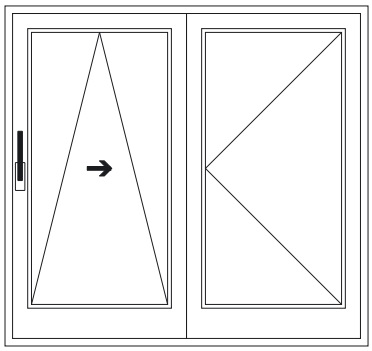

Scheme D – without mullion [2]
1 parallel slide and tilt door, 1 side hung door. Drawing shows handle position lh

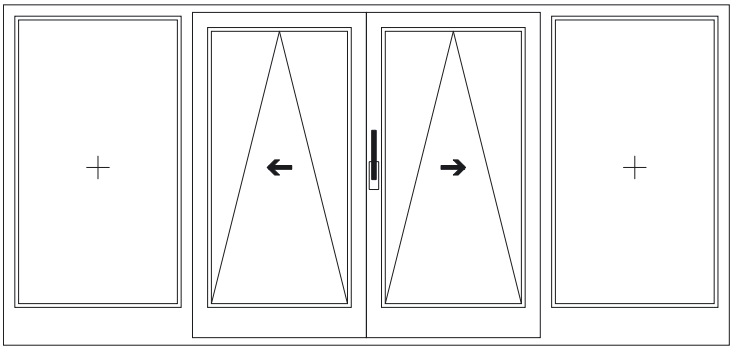

Scheme C – with mullion
2 parallel slide and tilt doors, 2 fixed glazings
Drawing shows first opening sash with handle position lh

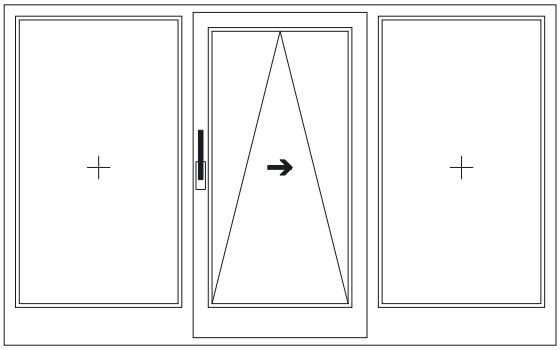

Scheme G – with mullion
1 parallel slide and tilt door, 2 fixed glazings
Drawing shows handle position lh

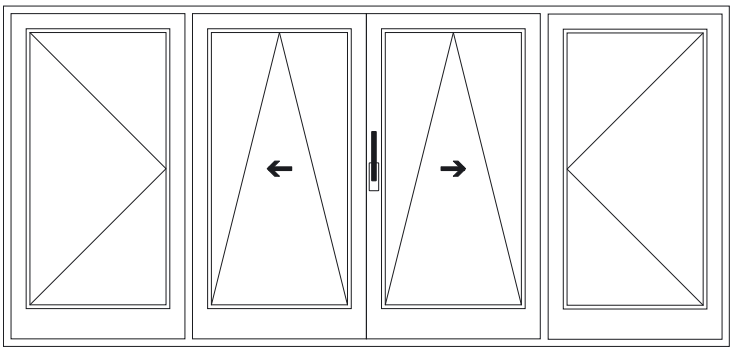

Scheme C – with mullion [1]
2 parallel slide and tilt doors, 2 side hung doors
Drawing shows first opening sash with handle position lh

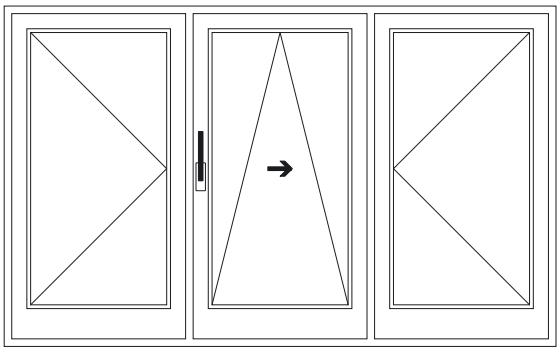

Scheme G – with mullion [1]
1 parallel slide and tilt door, 2 side hung doors
Drawing shows handle position lh

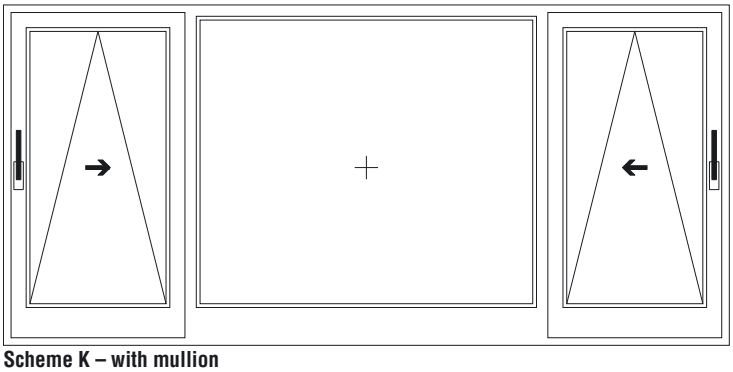

Scheme K – with mullion
2 parallel slide and tilt doors, 1 fixed glazing
Drawing shows handle position lh and handle position rh

Legend:

[1] Schemes A, C and G with side hung sash:
Side hung sash fittings JET AK 8with handle DIRIGENT-F/SG 8-00694-33-0-7 and rosette/F, inside – flat 6-24913-00-0-*, locking plates according to profile.

[2] Scheme D:
Side hung sash with rebate shoot bolt, locking plates according to profile.

Assembly dimensions – frame and sash profile

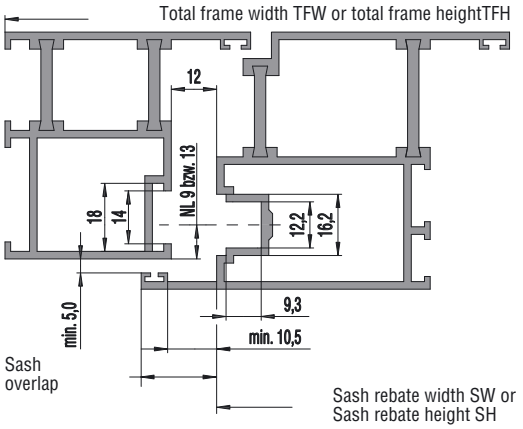

Frame and sash profile
Sash with fitting groove 16 mm – groove position 9 or 13 mm

Assembly dimensions – gliding rails, running rails, runners

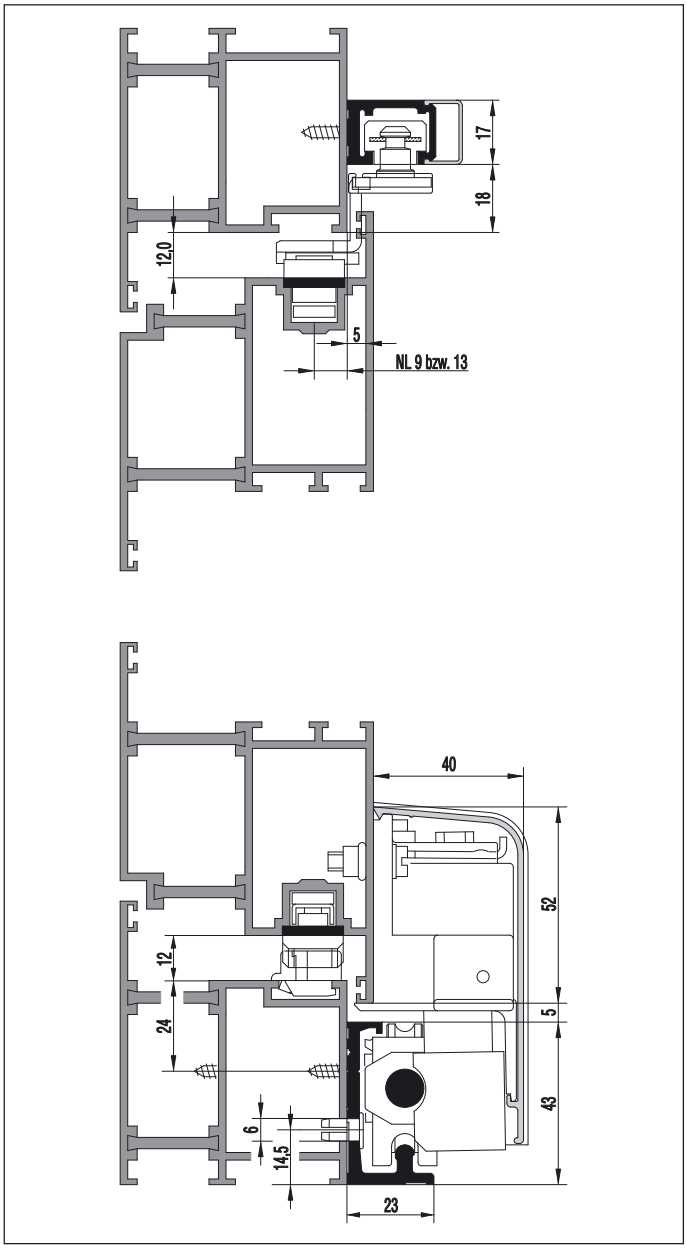

Parallel slide and tilt fittings G.U-968/200 mZ

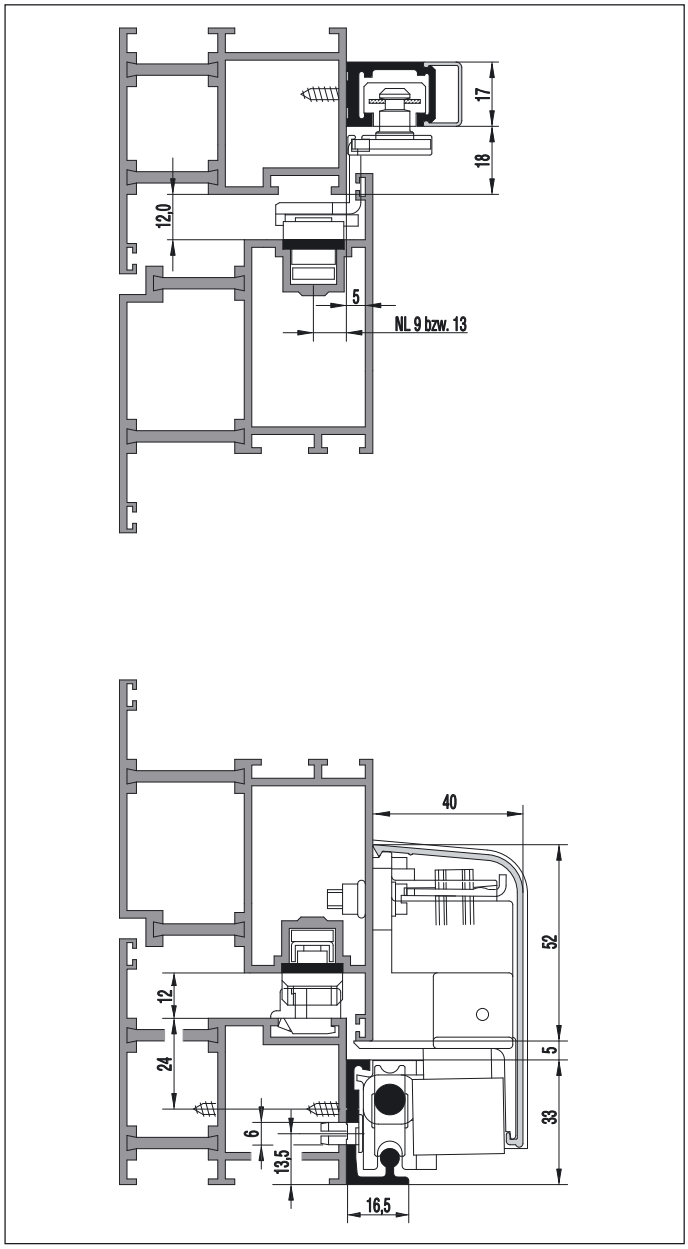

Parallel slide and tilt fittings G.U-968/150 mZ

Assembly dimensions – gliding rails, running rails, runners

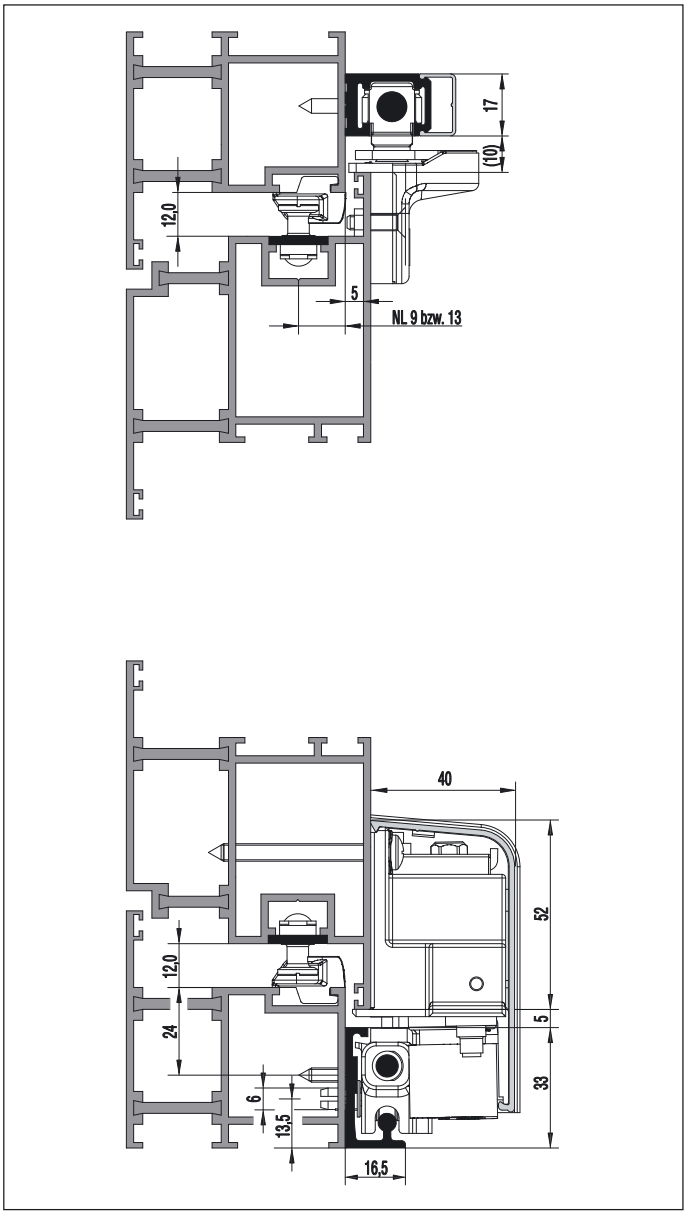

Parallel slide and tilt fittings G.U-968/150 oZ

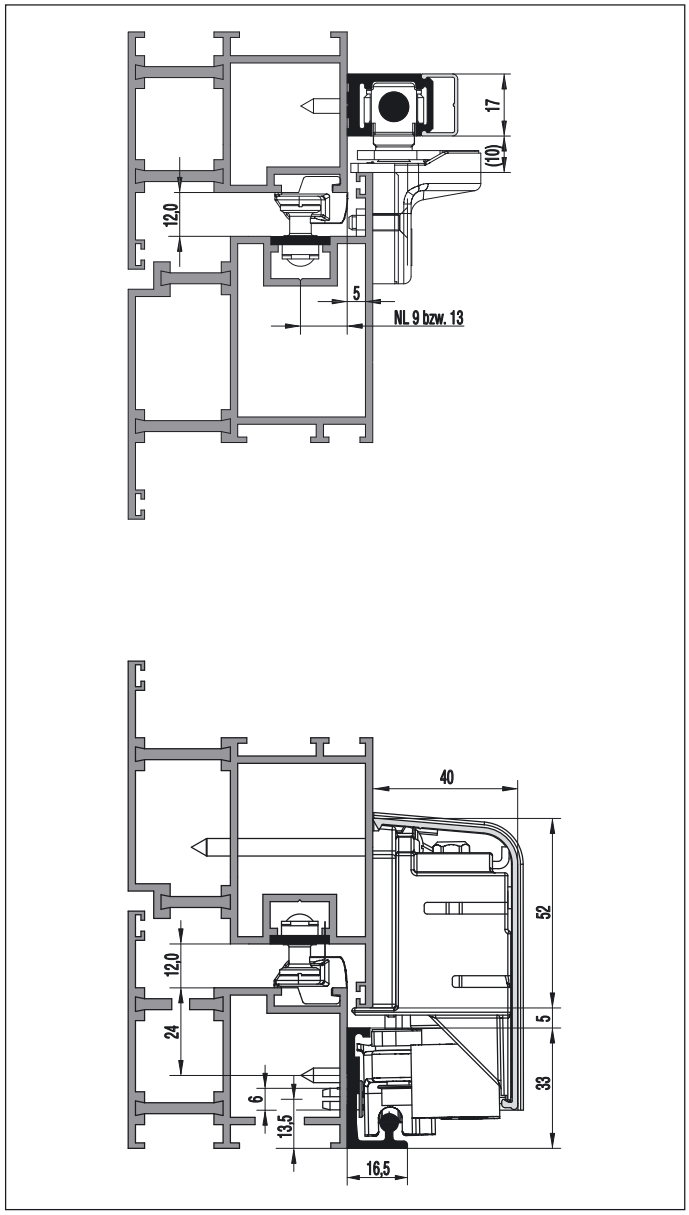

Parallel slide and tilt fittings G.U-90 oZ

Assembly dimensions – frame grooves

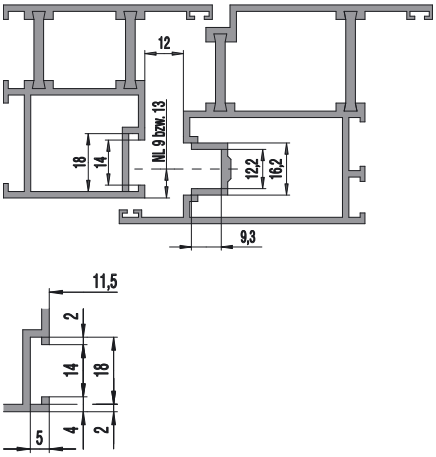

Frame groove 14/18

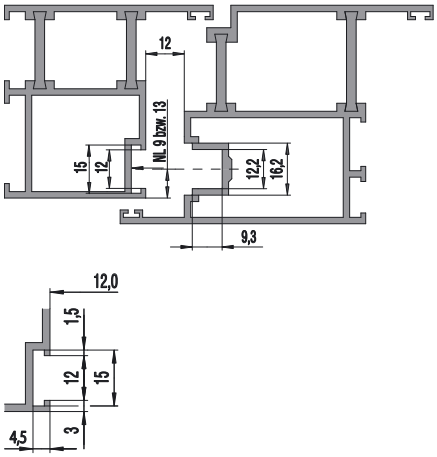

Frame groove 12/15

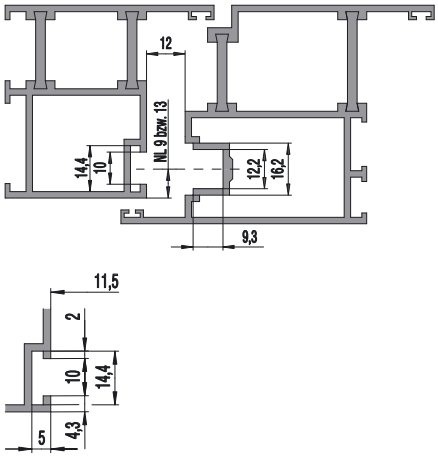

Frame groove 10/14

Drilling and milling dimensions geared handles and handles

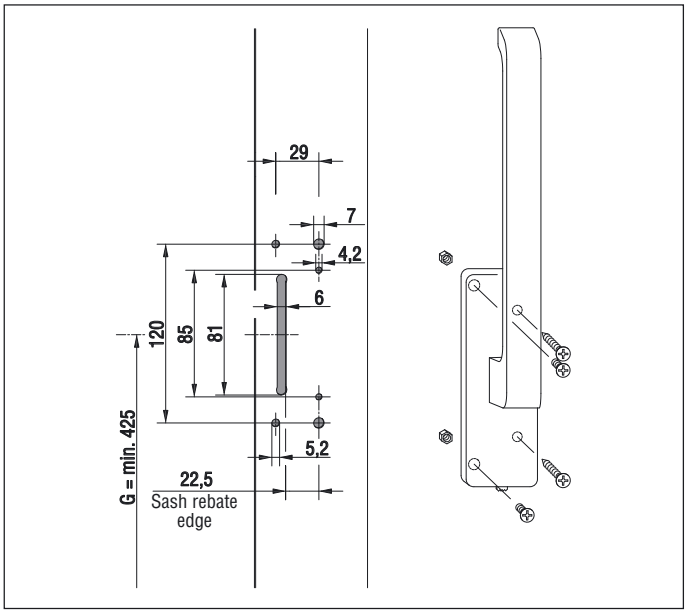

Drilling and milling dimensions for geared handle –
Parallel slide and tilt locking mechanism G.U-mZ
Drilling jig 6-24697-00-0-0

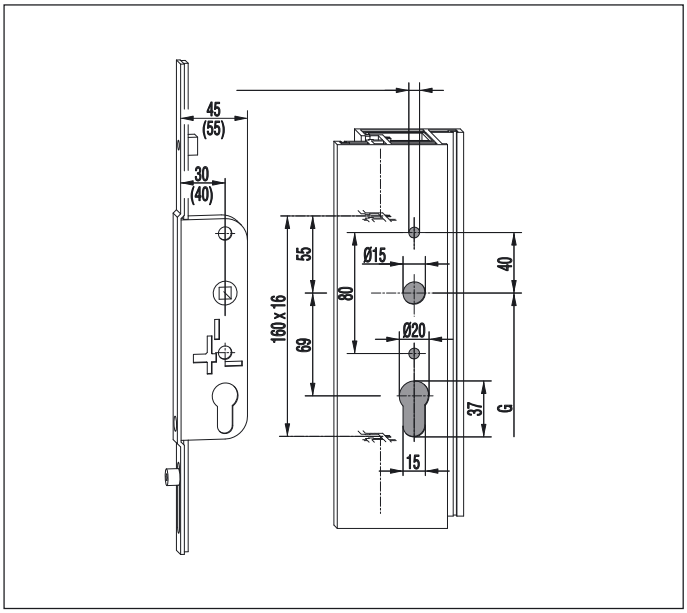

Drilling and milling dimensions for lockable gear –
Parallel slide and tilt locking mechanism G.U-mZ
Drilling jig 6-25745-00-0-0

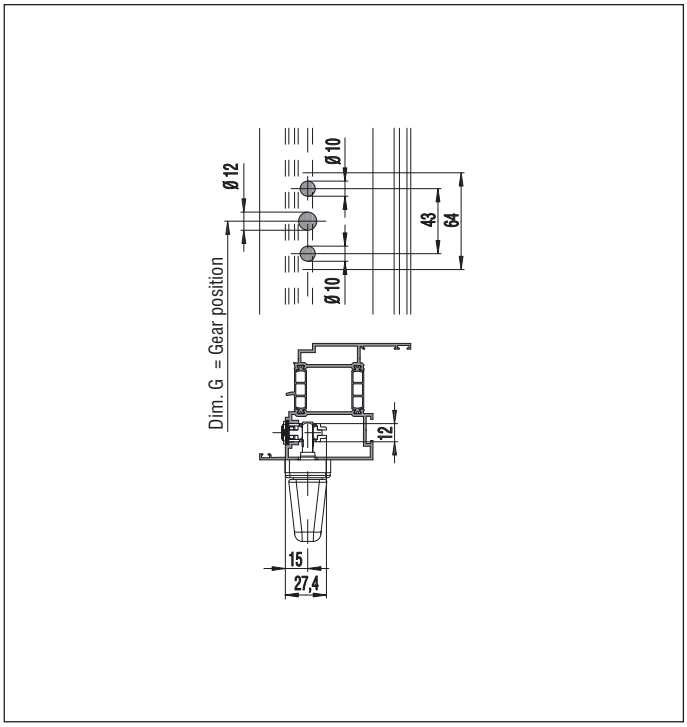

Drilling dimensions for handle DIRIGENT –
Parallel slide and tilt locking mechanisms G.U-150 oZ and G.U-90 oZ
Drilling jig 6-22459-00-0-0
Stop 9-27406-00-0-1

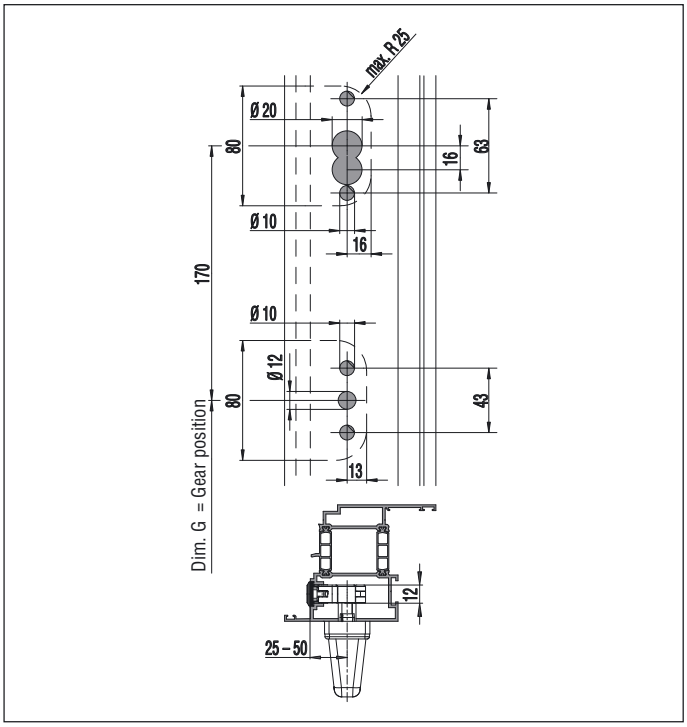

Drilling and milling dimensions for gear AP 25 to AP 50 –
Parallel slide and tilt locking mechanisms G.U-150 oZ and G.U-90 oZ
Drilling jig with stop 6-25156-00-0-9

Drilling and milling dimensions for stays, runners and supports

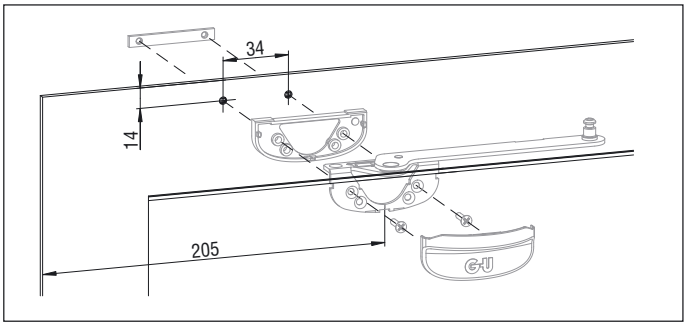

Drilling dimensions for stay –
Parallel slide and tilt locking mechanisms G.U-150 oZ and G.U-90 oZ

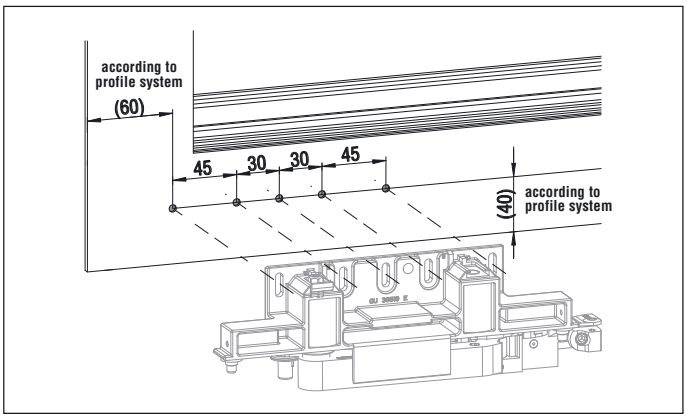

Drilling dimensions for runners –
Parallel slide and tilt locking mechanisms G.U-968/200 and G.U-968/150
Drilling jig 6-33342-00-0-0

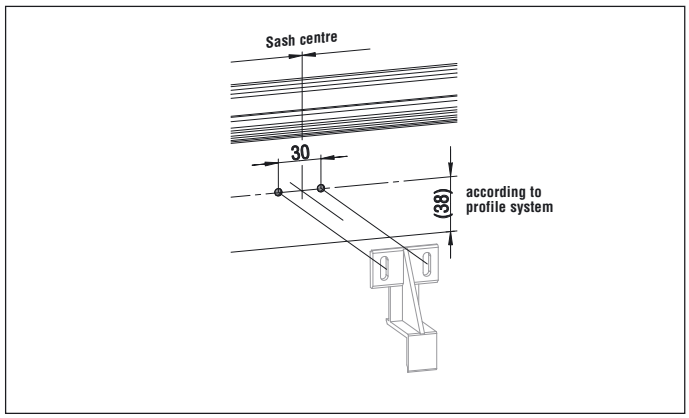

Drilling dimensions for supports –
Parallel slide and tilt locking mechanisms G.U-968/200 and G.U-968/150
Drilling jig 6-33342-00-0-0

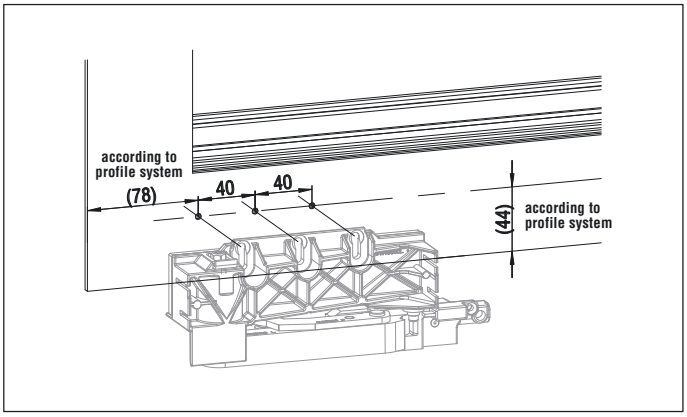

Drilling dimensions for runners –
Parallel slide and tilt locking mechanisms G.U-90
Drilling jig 9-30424-00-0-0

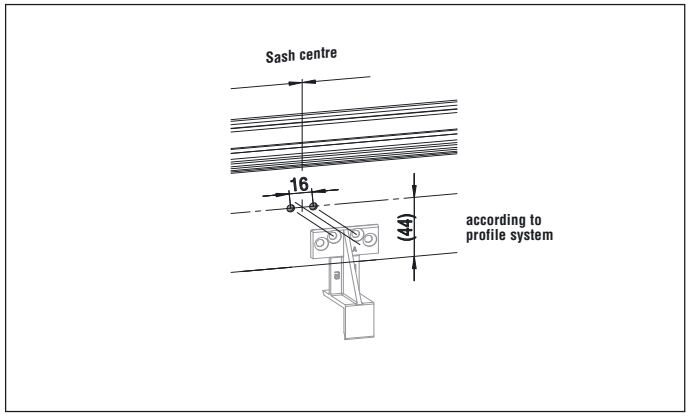

Drilling dimensions for supports –
Parallel slide and tilt locking mechanisms G.U-90
Drilling jig 9-30424-00-0-0

Geared handles and handles for windows and patio doors, accessories
Parallel slide and tilt locking mechanisms G.U-mZ

Geared handles DIRIGENT – Aluminium

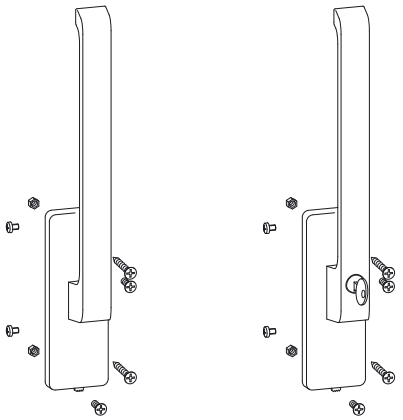

Contents:
1 geared handle
2 countersunk sheet metal screw 4,8x32
2 countersunk screws M 5 x 25
2 hex-nut M 5
2 fillister head screws

Handle length 240 mm

Box of geared handle G.U-mZ DIRIGENT with anti-lockout device

lockable – keyed alike

Fitting groove 16 mm		Fitting groove 16 mm	
handle pos. lh	K-13089-00-L-*	handle pos. lh	K-14286-00-L-*
handle pos. rh	K-13089-00-R-*	handle pos. rh	K-14286-00-R-*

Geared handles G.U-mZ for windows

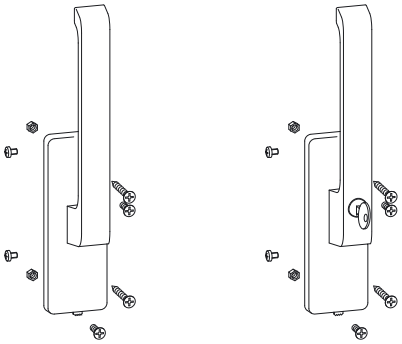

Contents:
1 geared handle
2 countersunk sheet metal screw 4,8x32
2 countersunk screws M 5 x 25
2 hex-nut M 5
2 fillister head screws

Handle length 240 mm

Box of geared handle G.U-mZ DIRIGENT with anti-lockout device

lockable – keyed alike

Fitting groove 16 mm		Fitting groove 16 mm	
handle pos. lh	K-17461-00-L-*	handle pos. lh	K-17462-02-L-*
handle pos. rh	K-17461-00-R-*	handle pos. rh	K-17462-02-R-*

Handle DIRIGENT inside – Aluminium

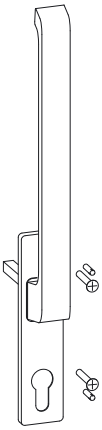

Contents:
1 handle inside
2 positioning pins

Handle length 240 mm

Bag of handle inside G.U-mZ DIRIGENT with cylinder bore

with cams	6-24622-00-0-*
without cams	6-24623-00-0-*

Handles DIRIGENT for operation from both sides – Aluminium

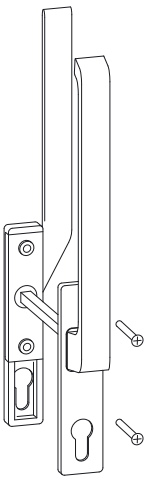

Contents:
1 handle for operation from both sides
2 countersunk screw M 6 x 75

Handle length 240 mm

Bag of handle for operation from both sides G.U-mZ, projection 20 mm DIRIGENT with cylinder bore and cams

K-13167-00-0-*

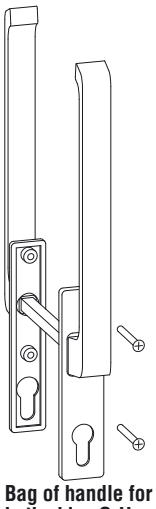

Contents:
1 handle for operation from both sides
2 countersunk screw M 6 x 75

Handle length 240 mm

Bag of handle for operation from both sides G.U-mZ, projection 30 mm DIRIGENT with cylinder bore and cams

K-12919-00-0-*

Countersunk screw DIN 965 for operation from both sides

ST

-60 mm	M 6 x 75	9-13274-75-0-1
61-65 mm	M 6 x 80	9-13274-80-0-1
66-70 mm	M 6 x 85	9-13274-85-0-1
71-78 mm	M 6 x 90	9-13274-90-0-1

Geared handles and handles for windows and patio doors, accessories
Parallel slide and tilt locking mechanisms G.U-mZ

Handle DIRIGENT inside and dummy plate outside – Stainless steel

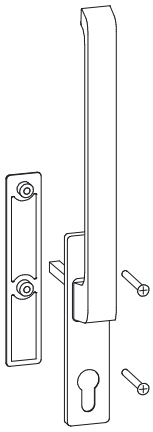

Contents:
1 handle inside
1 dummy plate outside
2 countersunk screws M 6 x 75

Handle length 240 mm

Bag of handle inside G.U-mZ
DIRIGENT with cylinder bore and cams
K-16925-00-0-8

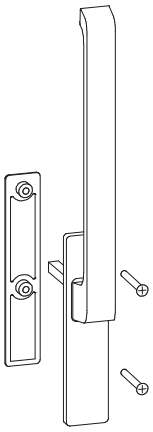

Contents:
1 handle inside
1 dummy plate outside
2 countersunk screws M 6 x 75

Handle length 240 mm

Bag of handle inside G.U-mZ
DIRIGENT without cylinder bore, with cams
K-16924-00-0-8

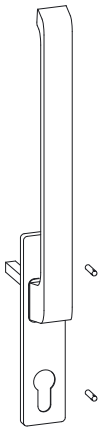

Contents:
1 handle inside
2 positioning pins 4 x 20

Handle length 240 mm

Bag of handle inside G.U-mZ
DIRIGENT with cylinder bore, without cams
K-16923-00-0-8

Geared handles and handles for windows and patio doors, accessories
Parallel slide and tilt locking mechanisms G.U-mZ

Handle RONDO inside and dummy plate outside – Stainless steel

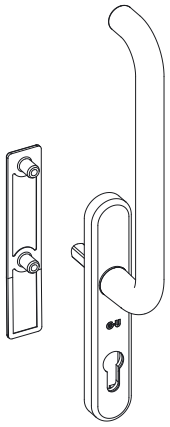

Contents:
1 handle inside
1 dummy plate outside
2 countersunk screws M 6 x 75

Handle length 240 mm

Bag of handle inside G.U-mZ
RONDO with cylinder bore and cams
K-16928-00-0-8

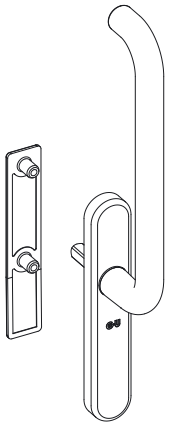

Contents:
1 handle inside
1 dummy plate outside
2 countersunk screws M 6 x 75

Handle length 240 mm

Bag of handle inside G.U-mZ
RONDO without cylinder bore, with cams
K-16927-00-0-8

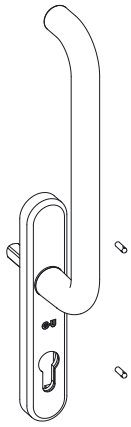

Contents:
1 handle inside
2 positioning pins 4 x 20

Handle length 240 mm

Bag of handle inside G.U-mZ
RONDO with cylinder bore, without cams
K-16926-00-0-8

Handle RONDO inside – Stainless steel / dummy plate outside – Aluminium

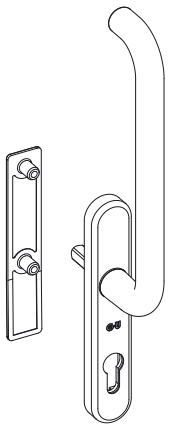

Contents:
1 handle inside
1 dummy plate outside
2 countersunk screws M 6 x 75

Handle length 240 mm

Bag of handle inside G.U-mZ
RONDO with cylinder bore and cams
K-17207-00-0-* [1]

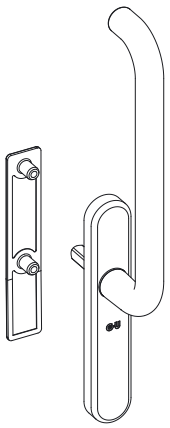

Contents:
1 handle inside
1 dummy plate outside
2 countersunk screws M 6 x 75

Handle length 240 mm

Bag of handle inside G.U-mZ
RONDO without cylinder bore, with cams
K-17206-00-0-* [1]

[1] *= Colour dummy plate: 1 = EV 1, 5 = UC 5, 7 = white

Geared handles and handles for windows and patio doors, accessories
Parallel slide and tilt locking mechanisms G.U-mZ

Handle FORTE inside and dummy plate outside – Stainless steel

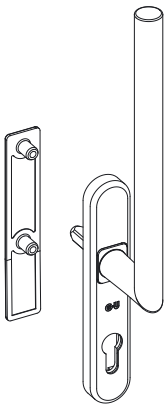

Contents:
1 handle inside
1 dummy plate outside
2 countersunk screws M 6 x 75

Handle length 240 mm

Bag of handle inside G.U-mZ
FORTE with cylinder bore and cams
K-17049-00-0-8

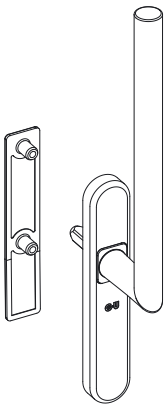

Contents:
1 handle inside
1 dummy plate outside
2 countersunk screws M 6 x 75

Handle length 240 mm

Bag of handle inside G.U-mZ
FORTE without cylinder bore, with cams
K-17048-00-0-8

Dummy plate outside – Stainless steel

Dummy plate outside
9-42833-00-0-8

Dummy plate outside – Aluminium

Dummy plate outside
9-30489-00-0-*

[1] *= Colour dummy plate: 1 = EV 1, 5 = UC 5, 7 = white

Parallel slide and tilt locking mechanisms G.U-mZ

Extension 500
6-24969-00-0-1

Extension 500
with mushroom pin
6-29159-00-0-1

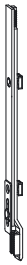

Extension 250
6-24737-00-0-1

Centre piece, horizontal
SRW 851-1100 = 1 ML
6-23516-01-0-1

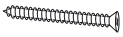

Spax countersunk screw
4 x 16 9-13246-16 PU 100
4 x 30 9-13246-30 PU 100
5 x 40 9-13295-40 PU 100

Locking plate Scheme C/ZH
False mullion with rebate clearance
12 mm 9-31960-00-0-1 PU 100
16 mm 9-32063-00-0-1 PU 100
Countersunk screw
9-13281-10-R-1 PU 400

Locking plate Se Scheme C/ZH
False mullion with rebate clearance
12 mm E-19813-00-0-1 PU 100
16 mm 9-39211-00-0-1 PU 100
Countersunk screw
9-13281-10-R-1 PU 400

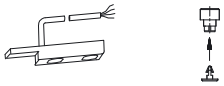

1 locking plate
6-28659-01-0-1
with electronic component,
1 alarm pin
6-29460-00-0-0

Bag of magnetic switch for monitoring of locking state
Cable length
4,0 m K-15161-00-0-0
10,0 m K-15161-10-0-0
AD 0-44518

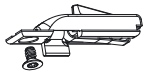

Bag of
wrong operation
safety device
DIN lh K-17060-00-L-1
DIN rh K-17060-00-R-1
AD 0-44747

Corner transmission installation

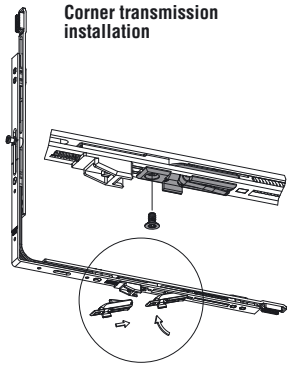

Stop P 1225
6-30388-00-0-6

Protective cap for rebate lever
9-34300-00-0-9

Gears, lockable – forend with locking pin

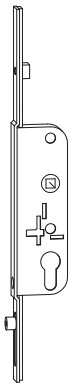

Gear 25, lockable – backset 25 mm

SRH	Forend	ML	G	PU	Article No.
820- 960	431		440	10	6-31497-01-0-1
961-1120	590		500	10	6-31497-02-0-1
1121-1370	840		500	10	6-31497-03-0-1
1371-1620	1090	1	600	10	6-31497-04-0-1
1621-1870	1340	1	600	10	6-31497-05-0-1
1621-1870	1340	1	980	10	6-31497-55-0-1
1871-2120	1590	2	980	10	6-31497-06-0-1
2121-2370	1840	2	980	10	6-31497-07-0-1

Gears for large sash profiles and aluminium-timber constructions

Gear 35, lockable – backset 35 mm

SRH	Forend	ML	G	PU	Article No.
1621-1870	1340	1	980	10	6-30932-55-0-1
1871-2120	1590	2	980	10	6-30932-06-0-1

Gear 45, lockable – backset 45 mm

SRH	Forend	ML	G	PU	Article No.
1621-1870	1340	1	980	10	6-30391-55-0-1
1871-2120	1590	2	980	10	6-30391-06-0-1

Gear 50, lockable – backset 50 mm

SRH	Forend	ML	G	PU	Article No.
1621-1870	1340	1	980	10	6-30392-55-0-1
1871-2120	1590	2	980	10	6-30392-06-0-1

Gears, lockable – forend without locking pin, prepared for assembly of locking plates

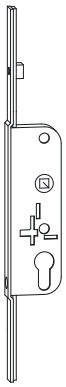

Gear 30, lockable – backset 30 mm

SRH	Forend	ML	G	PU	Article No.
1371-1620	1090		600	10	6-29881-04-0-1
1621-1870	1340		980	10	6-29881-55-0-1

Gear 40, lockable – backset 40 mm

SRH	Forend	ML	G	PU	Article No.
1371-1620	1090		600	10	6-29880-04-0-1
1621-1870	1340		980	10	6-29880-55-0-1

Gear 50, lockable – backset 50 mm

SRH	Forend	ML	G	PU	Article No.
1371-1620	1090		600	10	6-32576-04-0-1
1621-1870	1340		980	10	6-32576-55-0-1

Parallel slide and tilt locking mechanisms G.U-mZ
Box of stays G.U-mZ – corner transmissions with round locking pin

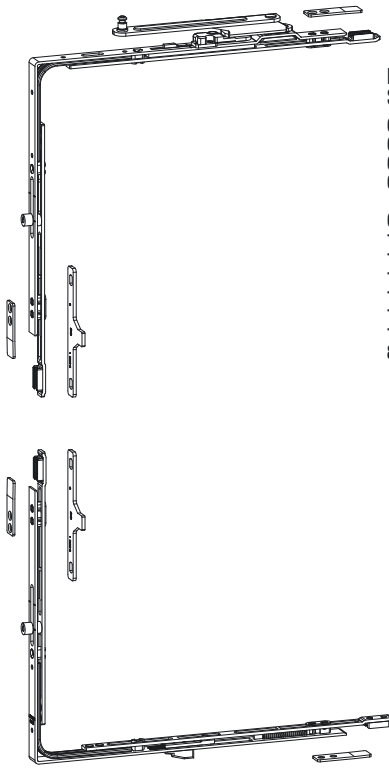

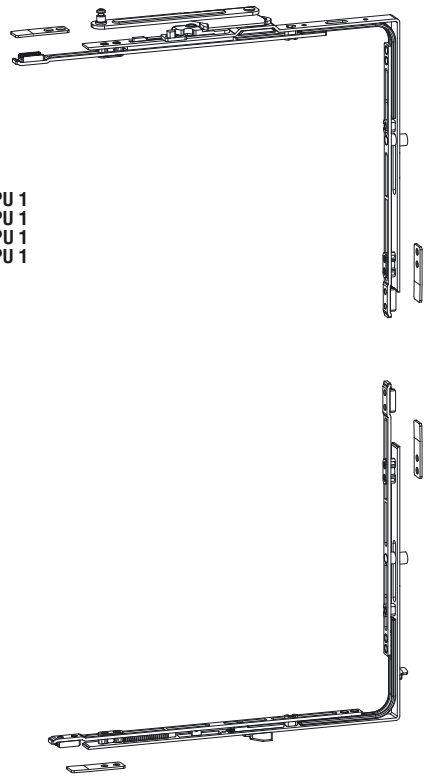

Box of stays G.U-mZ
Schemes A, D, G, K and C, active sash

Groove 9	Handle pos. lh	K-14139-00-L-1	PU 1
Groove 9	Handle pos. rh	K-14139-00-R-1	PU 1
Groove 13	Handle pos. lh	K-14191-00-L-1	PU 1
Groove 13	Handle pos. rh	K-14191-00-R-1	PU 1

Contents:
1 stay, front
1 stay, rear
1 corner transmission, front
1 corner transmission, rear
1 coupling, groove 9 mm
1 coupling, groove 13 mm
8 splice plates

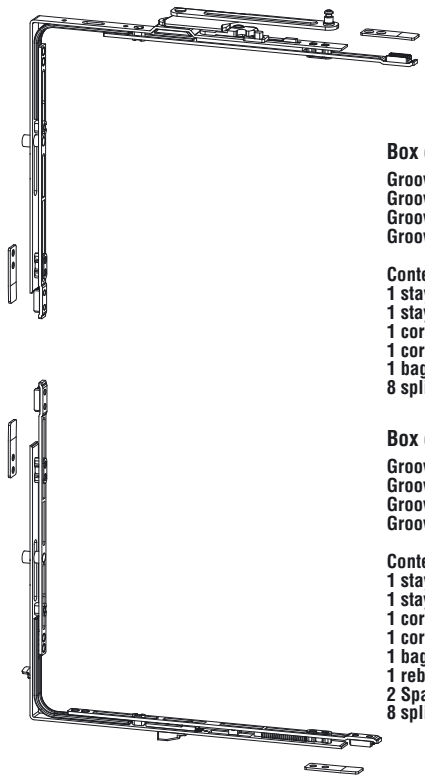

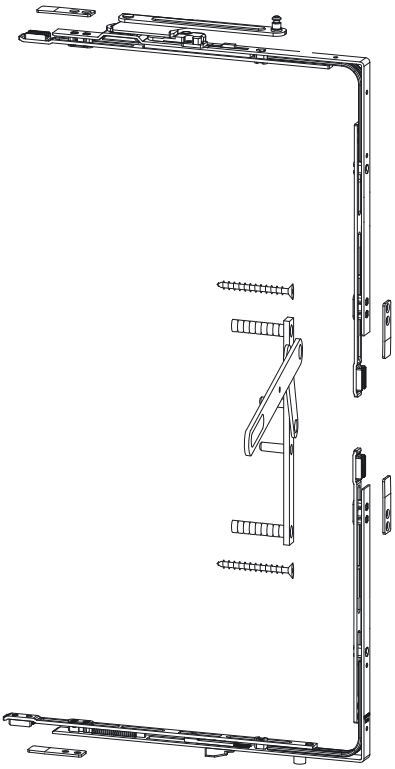

Box of stays G.U-mZ – scheme C/ZH false mullion

Groove 9	Handle pos. lh	K-14190-00-L-1	PU 1
Groove 9	Handle pos. rh	K-14190-00-R-1	PU 1
Groove 13	Handle pos. lh	K-14911-00-L-1	PU 1
Groove 13	Handle pos. rh	K-14911-00-R-1	PU 1

Contents:
1 stay, front
1 stay, rear
1 corner transmission, front
1 corner transmission, rear
1 bag of locking plates
8 splice plates

Box of stays G.U-mZ – scheme C/ZK false mullion

Groove 9	Handle pos. lh	K-14189-00-L-1	PU 1
Groove 9	Handle pos. rh	K-14189-00-R-1	PU 1
Groove 13	Handle pos. lh	K-14192-00-L-1	PU 1
Groove 13	Handle pos. rh	K-14192-00-R-1	PU 1

Contents:
1 stay, front
1 stay, rear
1 corner transmission, front
1 corner transmission, rear
1 bag of locking plates
1 rebate lever ZK
2 Spax countersunk screws
8 splice plates

Parallel slide and tilt fittings G.U-968/200 mZ
Tandem runner for sashes with heavy glazing

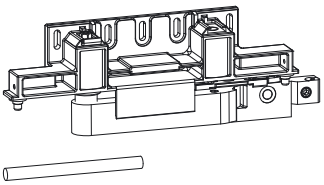

Rod Runner T, front

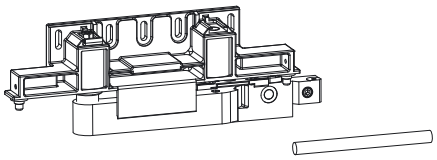

Runner T, rear Rod

Box of runners G.U-968/200 T
for aluminium doors

Handle pos. lh	K-15509-00-L-0	PU 1
Handle pos. rh	K-15509-00-R-0	PU 1

Contents:
1 runner G.U-968/200 T, front
1 runner G.U-968/200 T, rear
2 rods, Ø 10 mm

Parallel slide and tilt locking mechanisms G.U-mZ
Box of middle stay G.U-mZ for sash rebate widths SRW from 1851 to 2000 mm

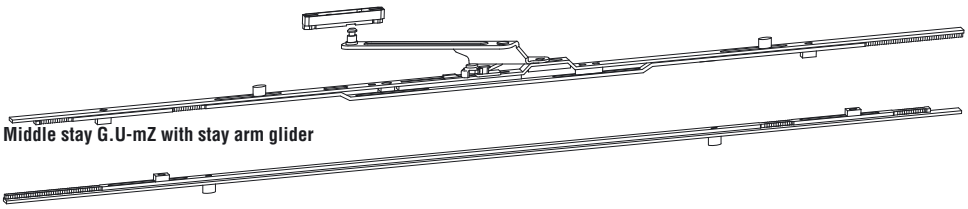

Middle stay G.U-mZ with stay arm glider

Centre piece, horizontal

Box of middle stay G.U-mZ
Basic security and enhanced basic security

Groove 9 mm	Handle pos. lh	K-15486-00-L-1	PU 1
	Handle pos. rh	K-15486-00-R-1	PU 1
Groove 13 mm	Handle pos. lh	K-15487-00-L-1	PU 1
	Handle pos. rh	K-15487-00-R-1	PU 1

Contents:
1 middle stay G.U-mZ with stay arm glider
1 centre piece, horizontal

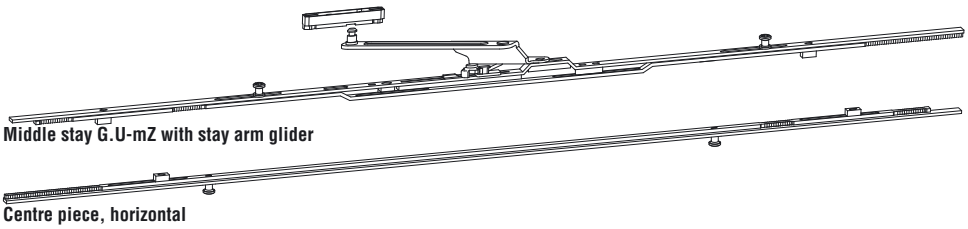

Middle stay G.U-mZ with stay arm glider

Centre piece, horizontal

Box of middle stay G.U-mZ
WK 2

Groove 9 mm	Handle pos. lh	K-15488-00-L-1	PU 1
	Handle pos. rh	K-15488-00-R-1	PU 1
Groove 13 mm	Handle pos. lh	K-15489-00-L-1	PU 1
	Handle pos. rh	K-15489-00-R-1	PU 1

Contents:
1 middle stay G.U-mZ with stay arm glider
1 centre piece, horizontal

Handles DIRIGENT-F [1]

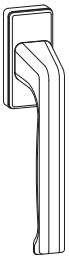

DIRIGENT-F
Spindle 25 6-28072-25-0-*
Spindle 29 6-28072-29-0-*

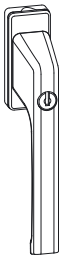

DIRIGENT-F/Z
with push button cylinder, all keys alike
Spindle 29 6-28075-29-0-*

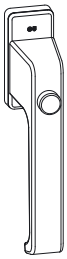

DIRIGENT-F
with anti-lockout device
Spindle 29 6-25384-00-0-*

MODENA-F/Z 100 Nm [2]
for security windows and patio doors
Spindle 29 6-34397-29-0-*

DIRIGENT-F/SG
Spindle 50 8-00694-50-0-7

Rosette/F inside – flat
6-24913-00-0-*

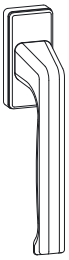

DIRIGENT-F
inside – without spindle
6-28072-00-0-*

DIRIGENT-F/AF,
outside – flat
6-25223-00-0-*

DIRIGENT-F/A,
outside
6-25993-00-0-*

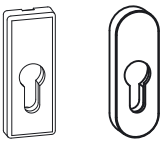

Rosette with CB inside
square K-17205-02-0-*
oval K-17204-02-0-*

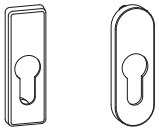

Rosette PZ/A outside
square 9-43605-02-0-*
oval 9-43582-02-0-*

Spindle
ST 56-68 9-26874-56-0-1
ST 69-80 9-26874-69-0-1

Inside/ outside operation
Countersunk screw M 5
ST 50-54 9-13255-60-0-1
ST 55-59 9-13255-65-0-1
ST 60-64 9-13255-70-0-1
ST 65-69 9-13255-75-0-1
ST 70-74 9-13255-80-0-1
ST 75-80 9-13255-85-0-1

Inside operation
Countersunk screw M 5
Spindle 25 9-13255-30-0-1
Spindle 29 9-13255-35-0-1

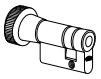

Knob lock
Backset 25 - 50 mm
K-13282-00-0-*

Pull handle outside
9-22921-00-0-*

[1] = More turn handles see part 3 of the present order catalogue.
[2] = Tested to DIN V EN V 1627 for resistance to pull-off and twist-off attempts at 100 Nm.

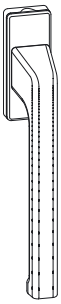

DIRIGENT-HL
elongated
Rosette 32 x 81 mm
Spindle 25 6-31382-25-0-*
Spindle 29 6-31382-29-0-*

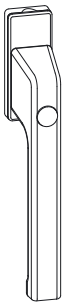

DIRIGENT-HL
elongated
Rosette 32 x 81 mm
push button cylinder
Spindle 30 6-31383-30-0-*

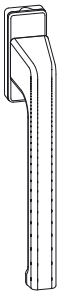

DIRIGENT-HL
elongated
Rosette 28 x 67 mm
Spindle 33 6-32629-33-0-*

Stay G.U-oZ – adjustable

End cap

Stay G.U-oZ – adjustable
Screw , nut

Cover rail P 1481

Fitting requirements according to size of sashes for schemes A to K

Quantity A	C	D	G	K	Description		PU	Article No.
1	2	1	1	2	**Stay G.U-oZ – adjustable**			
					SRW			
					600- 850		1	6-26274-05-0-1
					851-1100		1	6-26274-08-0-1
					1101-1350		1	6-26274-10-0-1
					1351-1600		1	6-26274-13-0-1
1	2	1	1	2	**Bag of Screws**		1	K-13068-00-0-1
1	2	1	1	2	**Cover rail P 1481** [1]			
					SRW	Length		
					600- 850	840	1	9-34520-08-0-*
					851-1100	1090	1	9-34520-11-0-*
					1101-1350	1340	1	9-34520-13-0-*
					1351-1600	1590	1	9-34520-16-0-*
					Lagerlänge	5000	1	9-34520-50-0-*
1	2	1	1	2	**End cap** [1]			
					lh		1	9-34517-00-L-*
					rh		1	9-34517-00-R-*

[1] * = Colour: 1 = EV 1, 5 = UC 5, 7 = white (RAL 9016)

Working drawing
G.U-968/150 oZ 0-43981

Positioning and locking plates according to frame groove – Fitting groove 16 mm

Description	Dim.	Length mm	Illustration	Groove 9 Frame groove 14/18	Groove 9 Frame groove 10/14	Groove 13 Frame groove 14/18	Groove 13 Frame groove 10/14
Locking plates – standard Frame profiles – zinc clampable	A = 2,0 A = 1,5	55 55	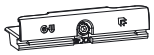	6-32628-00-0-1 6-32628-01-0-1	6-32628-00-0-1 6-32628-01-0-1	6-33278-00-0-1 6-33278-01-0-1	6-33278-00-0-1 6-33278-01-0-1
Standard locking plate Frame – zinc screw-on version	B = 4,0 B = 3,5	55 55 55		9-45219-14-0-1 9-45219-15-0-1	9-45219-10-0-1		
Locking plates Se – mushroom Frame profiles – steel	B = 4,0 B = 3,5	55 55 55		6-27674-48-0-1 6-27674-49-0-1	6-27674-62-0-1	6-33398-00-0-1	6-27831-44-0-1
Locking plates Ahs – mushroom Frame profiles – zinc clampable	B = 4,0 B = 3,5	55 55 55	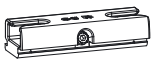	6-32225-14-0-1 6-32225-15-0-1	6-32225-10-0-1		
Positioning plates Frame profiles A = 2,0 A = 1,5				6-25587-03-0-1	6-25587-01-0-1	6-33442-00-0-1 6-33442-01-0-1	6-33442-00-0-1 6-33442-01-0-1

4

Positioning and locking plates according to profile system – Fitting groove 16 mm

Profile systems for aluminium patio doors

Profile systems	Sash	Frame	Mullion	False mullion	Working drawings 968/200mZ	968/150mZ	Positioning plate PU 20	Locking plate frame PU 100	Locking plate Se – mushroom PU 100	Locking plate false mullion PU 100		Handle, lockable both sides 30*	40*	inside 30*	40*
Akotherm	1549	1503	1511	1508	0-42553-2		6-25587-02-0-1	G-11800-00-0-1		G-11800-00-0-1					
Alcan Serie PA 65	77515	77504	77507		0-44709-1	0-43905-1	9-29990-07-0-1	9-30146-07-0-1				X		X	
Alcoa AA 610	772 097	771 575					6-25587-01-0-1	6-28734-10-0-1							
Alcoa RT 620	731 606	717 837	717 855	733 428			6-25587-01-0-1	6-28734-10-0-1		6-28734-10-0-1		X		X	
Aluman	Z 97 CX	L 60 CX					9-30913-03-0-1	E18289-00-0-1							
Alumil M20000	M20028	M20026					6-25587-03-0-1	6-32628-01-0-1	6-27674-49-0-1						
EurAl Serie 65	162 400	161 100	163 200		0-41090-2		9-29990-13-0-1	9-35894-00-0-1				X		X	
Forster (Stahl)	500.700	505.665				0-41080-2	9-30163-18-0-1	9-30147-00-0-1							
Forster Norm bzw. Presto 50	32.635	32.357	32.335	32.642	0-43887-1		9-30163-18-0-1	9-30147-00-0-1							
Forster Therm Clima (Stahl)	510.800	510.735	510.732	510.832	0-43778-1		9-30163-18-0-1	9-30147-00-0-1							
Hartmann Systherm 62					0-40052-2		9-29990-05-0-1	9-30146-05-0-1				X		X	
Hartmann Systherm 72	75 342 0	72 030 0	72 022 0				9-29990-05-0-1	9-30146-05-0-1				X		X	
Hartmann Systherm 72E	769020	760070	761050	769290	0-43827-2	0-43928-2	9-29990-05-0-1	9-30146-05-0-1		9-30146-05-0-1					
Heroal Serie 040 (050/065)	6405	6424	6433	6403	0-43902-1		6-25587-05-0-1	6-28734-09-0-1		6-30050-00-0-1		X		X	
Hueck 2.1	556 205	556 103	556 300				9-29990-07-0-1	9-30146-07-0-1	6-27674-So-0-1			X		X	
Isopro (Stahl)	ip-63620	ip-01541	ip-02541		0-40310-2		9-30163-17-0-1	9-31016-00-0-1							
Klauke Softline	672 446	672 432	672 433		0-40431-2		9-29990-03-0-1	9-30146-03-0-1				X		X	
Metra	NC.5044						9-29990-13-0-1	9-30146-13-0-1							
Metra-Clima Imperial	A 20 2101	A 01 0203					9-40050-00-0-1								
MKF TKI 602	602-02-022	602-01-015	602-03-002	602-02-026	0-43846-2		6-25071-00-0-1								
New Tec							9-39180-00-0-1	9-39179-00-0-1							
Reynaers					0-44795-1		6-25587-03-0-1	6-28734-14-0-1							
Schüco Royal 64W							9-44031-00-0-1	9-44029-00-0-1							
Schüco Royal S65							9-44031-00-0-1	9-44029-00-0-1							
Sokaltherm 7500	16311	16121					9-29990-04-0-1	9-30146-04-0-1							
TS-Aluminium Serie 65	177 215	177 216					9-29990-07-0-1	9-40232-00-0-1							
VAW Profitherm							9-29990-07-0-1	9-30146-07-0-1							
VAW Serie 75E							9-29990-07-0-1	9-30146-07-0-1				X		X	
Wicona Serie-Wicline 60					0-42860-1		6-25587-04-0-1	9-30146-20-0-1							
Wicona Serie-Wicline L-60A					0-42676-1		6-25587-04-0-1	9-30146-20-0-1							

with geared handle inside, groove position 9 and 13

Basic security

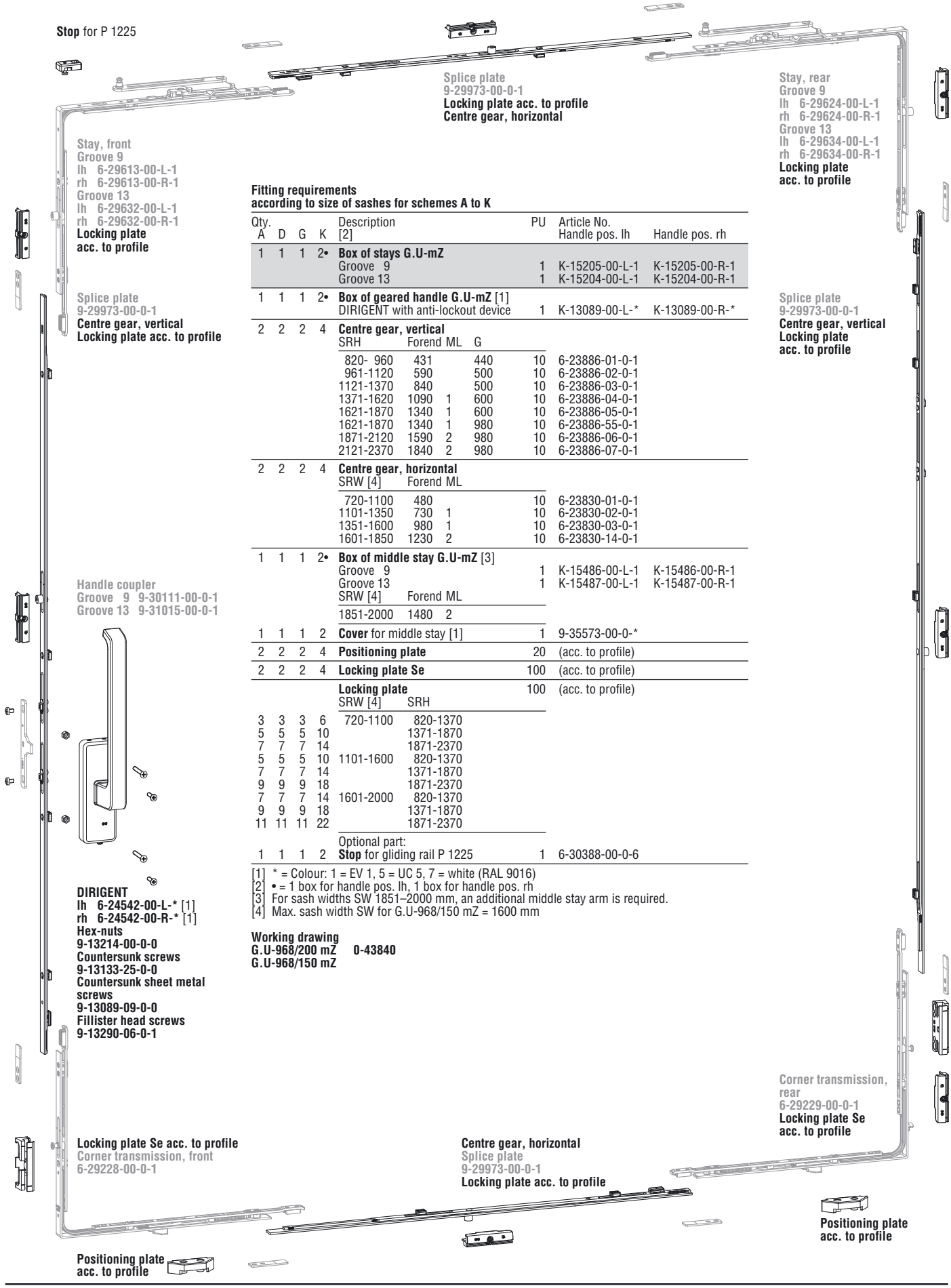

Fitting requirements according to size of sashes for schemes A to K

Qty. A	D	G	K	Description [2]				PU	Article No. Handle pos. lh	Handle pos. rh
1	1	1	2•	**Box of stays G.U-mZ**						
				Groove 9				1	K-15205-00-L-1	K-15205-00-R-1
				Groove 13				1	K-15204-00-L-1	K-15204-00-R-1
1	1	1	2•	**Box of geared handle G.U-mZ** [1]						
				DIRIGENT with anti-lockout device				1	K-13089-00-L-*	K-13089-00-R-*
2	2	2	4	**Centre gear, vertical**						
				SRH	Forend	ML	G			
				820- 960	431		440	10	6-23886-01-0-1	
				961-1120	590		500	10	6-23886-02-0-1	
				1121-1370	840		500	10	6-23886-03-0-1	
				1371-1620	1090	1	600	10	6-23886-04-0-1	
				1621-1870	1340	1	600	10	6-23886-05-0-1	
				1621-1870	1340	1	980	10	6-23886-55-0-1	
				1871-2120	1590	2	980	10	6-23886-06-0-1	
				2121-2370	1840	2	980	10	6-23886-07-0-1	
2	2	2	4	**Centre gear, horizontal**						
				SRW [4]	Forend	ML				
				720-1100	480			10	6-23830-01-0-1	
				1101-1350	730	1		10	6-23830-02-0-1	
				1351-1600	980	1		10	6-23830-03-0-1	
				1601-1850	1230	2		10	6-23830-14-0-1	
1	1	1	2•	**Box of middle stay G.U-mZ** [3]						
				Groove 9				1	K-15486-00-L-1	K-15486-00-R-1
				Groove 13				1	K-15487-00-L-1	K-15487-00-R-1
				SRW [4]	Forend	ML				
				1851-2000	1480	2				
1	1	1	2	**Cover** for middle stay [1]				1	9-35573-00-0-*	
2	2	2	4	**Positioning plate**				20	(acc. to profile)	
2	2	2	4	**Locking plate Se**				100	(acc. to profile)	
				Locking plate				100	(acc. to profile)	
				SRW [4]	SRH					
3	3	3	6	720-1100	820-1370					
5	5	5	10		1371-1870					
7	7	7	14		1871-2370					
5	5	5	10	1101-1600	820-1370					
7	7	7	14		1371-1870					
9	9	9	18		1871-2370					
7	7	7	14	1601-2000	820-1370					
9	9	9	18		1371-1870					
11	11	11	22		1871-2370					
				Optional part:						
1	1	1	2	**Stop** for gliding rail P 1225				1	6-30388-00-0-6	

[1] * = Colour: 1 = EV 1, 5 = UC 5, 7 = white (RAL 9016)
[2] • = 1 box for handle pos. lh, 1 box for handle pos. rh
[3] For sash widths SW 1851–2000 mm, an additional middle stay arm is required.
[4] Max. sash width SW for G.U-968/150 mZ = 1600 mm

Working drawing
G.U-968/200 mZ 0-43840
G.U-968/150 mZ

with lockable gear, groove position 9 and 13

Basic security

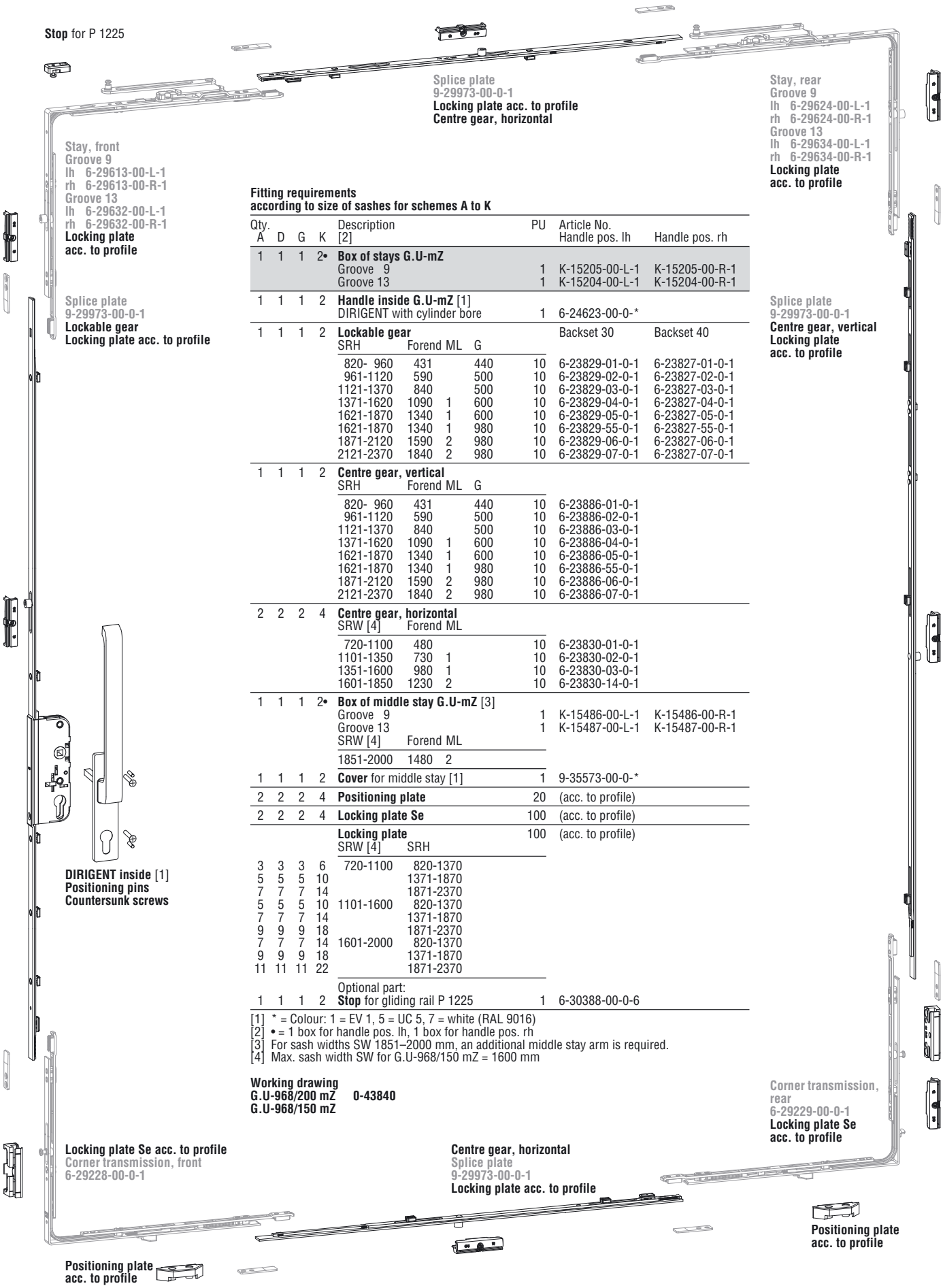

Fitting requirements
according to size of sashes for schemes A to K

Qty. A	D	G	K	Description [2]				PU	Article No. Handle pos. lh	Handle pos. rh
1	1	1	2•	**Box of stays G.U-mZ**						
				Groove 9				1	K-15205-00-L-1	K-15205-00-R-1
				Groove 13				1	K-15204-00-L-1	K-15204-00-R-1
1	1	1	2	**Handle inside G.U-mZ** [1]						
				DIRIGENT with cylinder bore				1	6-24623-00-0-*	
1	1	1	2	**Lockable gear**					Backset 30	Backset 40
				SRH	Forend	ML	G			
				820- 960	431		440	10	6-23829-01-0-1	6-23827-01-0-1
				961-1120	590		500	10	6-23829-02-0-1	6-23827-02-0-1
				1121-1370	840		500	10	6-23829-03-0-1	6-23827-03-0-1
				1371-1620	1090	1	600	10	6-23829-04-0-1	6-23827-04-0-1
				1621-1870	1340	1	600	10	6-23829-05-0-1	6-23827-05-0-1
				1621-1870	1340	1	980	10	6-23829-55-0-1	6-23827-55-0-1
				1871-2120	1590	2	980	10	6-23829-06-0-1	6-23827-06-0-1
				2121-2370	1840	2	980	10	6-23829-07-0-1	6-23827-07-0-1
1	1	1	2	**Centre gear, vertical**						
				SRH	Forend	ML	G			
				820- 960	431		440	10	6-23886-01-0-1	
				961-1120	590		500	10	6-23886-02-0-1	
				1121-1370	840		500	10	6-23886-03-0-1	
				1371-1620	1090	1	600	10	6-23886-04-0-1	
				1621-1870	1340	1	600	10	6-23886-05-0-1	
				1621-1870	1340	1	980	10	6-23886-55-0-1	
				1871-2120	1590	2	980	10	6-23886-06-0-1	
				2121-2370	1840	2	980	10	6-23886-07-0-1	
2	2	2	4	**Centre gear, horizontal**						
				SRW [4]	Forend	ML				
				720-1100	480			10	6-23830-01-0-1	
				1101-1350	730	1		10	6-23830-02-0-1	
				1351-1600	980	1		10	6-23830-03-0-1	
				1601-1850	1230	2		10	6-23830-14-0-1	
1	1	1	2•	**Box of middle stay G.U-mZ** [3]						
				Groove 9				1	K-15486-00-L-1	K-15486-00-R-1
				Groove 13				1	K-15487-00-L-1	K-15487-00-R-1
				SRW [4]	Forend	ML				
				1851-2000	1480	2				
1	1	1	2	**Cover** for middle stay [1]				1	9-35573-00-0-*	
2	2	2	4	**Positioning plate**				20	(acc. to profile)	
2	2	2	4	**Locking plate Se**				100	(acc. to profile)	
				Locking plate				100	(acc. to profile)	
				SRW [4]	SRH					
3	3	3	6	720-1100	820-1370					
5	5	5	10		1371-1870					
7	7	7	14		1871-2370					
5	5	5	10	1101-1600	820-1370					
7	7	7	14		1371-1870					
9	9	9	18		1871-2370					
7	7	7	14	1601-2000	820-1370					
9	9	9	18		1371-1870					
11	11	11	22		1871-2370					
				Optional part:						
1	1	1	2	**Stop** for gliding rail P 1225				1	6-30388-00-0-6	

[1] * = Colour: 1 = EV 1, 5 = UC 5, 7 = white (RAL 9016)
[2] • = 1 box for handle pos. lh, 1 box for handle pos. rh
[3] For sash widths SW 1851–2000 mm, an additional middle stay arm is required.
[4] Max. sash width SW for G.U-968/150 mZ = 1600 mm

Working drawing
G.U-968/200 mZ 0-43840
G.U-968/150 mZ

with geared handle inside, groove position 9 and 13

Enhanced basic security

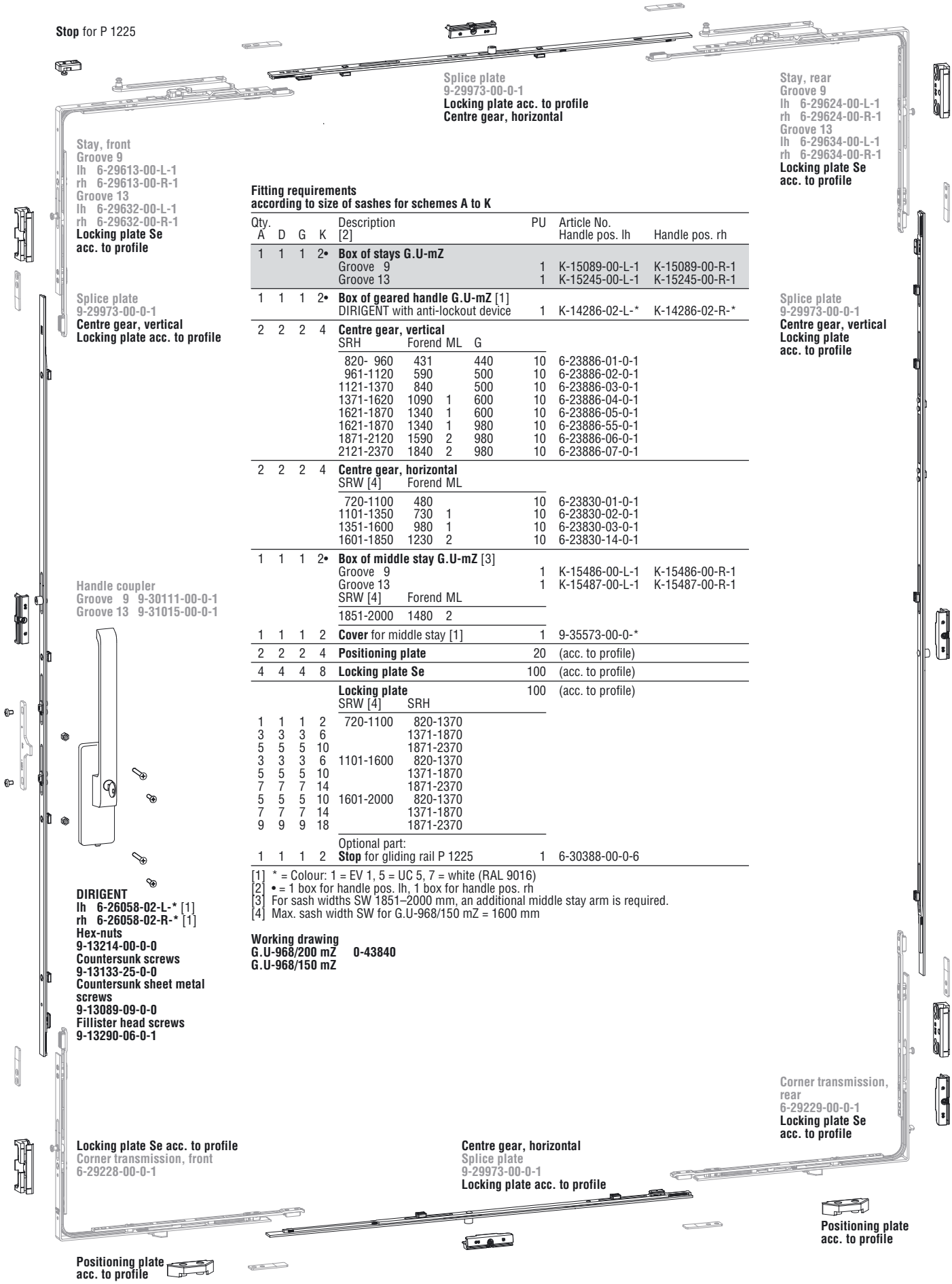

Fitting requirements
according to size of sashes for schemes A to K

Qty. A	D	G	K	Description [2]				PU	Article No. Handle pos. lh	Handle pos. rh
1	1	1	2•	**Box of stays G.U-mZ**						
				Groove 9				1	K-15089-00-L-1	K-15089-00-R-1
				Groove 13				1	K-15245-00-L-1	K-15245-00-R-1
1	1	1	2•	**Box of geared handle G.U-mZ** [1]						
				DIRIGENT with anti-lockout device				1	K-14286-02-L-*	K-14286-02-R-*
2	2	2	4	**Centre gear, vertical**						
				SRH	Forend	ML	G			
				820- 960	431		440	10	6-23886-01-0-1	
				961-1120	590		500	10	6-23886-02-0-1	
				1121-1370	840		500	10	6-23886-03-0-1	
				1371-1620	1090	1	600	10	6-23886-04-0-1	
				1621-1870	1340	1	600	10	6-23886-05-0-1	
				1621-1870	1340	1	980	10	6-23886-55-0-1	
				1871-2120	1590	2	980	10	6-23886-06-0-1	
				2121-2370	1840	2	980	10	6-23886-07-0-1	
2	2	2	4	**Centre gear, horizontal**						
				SRW [4]	Forend	ML				
				720-1100	480			10	6-23830-01-0-1	
				1101-1350	730	1		10	6-23830-02-0-1	
				1351-1600	980	1		10	6-23830-03-0-1	
				1601-1850	1230	2		10	6-23830-14-0-1	
1	1	1	2•	**Box of middle stay G.U-mZ** [3]						
				Groove 9				1	K-15486-00-L-1	K-15486-00-R-1
				Groove 13				1	K-15487-00-L-1	K-15487-00-R-1
				SRW [4]	Forend	ML				
				1851-2000	1480	2				
1	1	1	2	**Cover** for middle stay [1]				1	9-35573-00-0-*	
2	2	2	4	**Positioning plate**				20	(acc. to profile)	
4	4	4	8	**Locking plate Se**				100	(acc. to profile)	
				Locking plate				100	(acc. to profile)	
				SRW [4]	SRH					
1	1	1	2	720-1100	820-1370					
3	3	3	6		1371-1870					
5	5	5	10		1871-2370					
3	3	3	6	1101-1600	820-1370					
5	5	5	10		1371-1870					
7	7	7	14		1871-2370					
5	5	5	10	1601-2000	820-1370					
7	7	7	14		1371-1870					
9	9	9	18		1871-2370					
				Optional part:						
1	1	1	2	**Stop** for gliding rail P 1225				1	6-30388-00-0-6	

[1] * = Colour: 1 = EV 1, 5 = UC 5, 7 = white (RAL 9016)
[2] • = 1 box for handle pos. lh, 1 box for handle pos. rh
[3] For sash widths SW 1851–2000 mm, an additional middle stay arm is required.
[4] Max. sash width SW for G.U-968/150 mZ = 1600 mm

Working drawing
G.U-968/200 mZ 0-43840
G.U-968/150 mZ

with lockable gear, groove position 9 and 13

Enhanced basic security

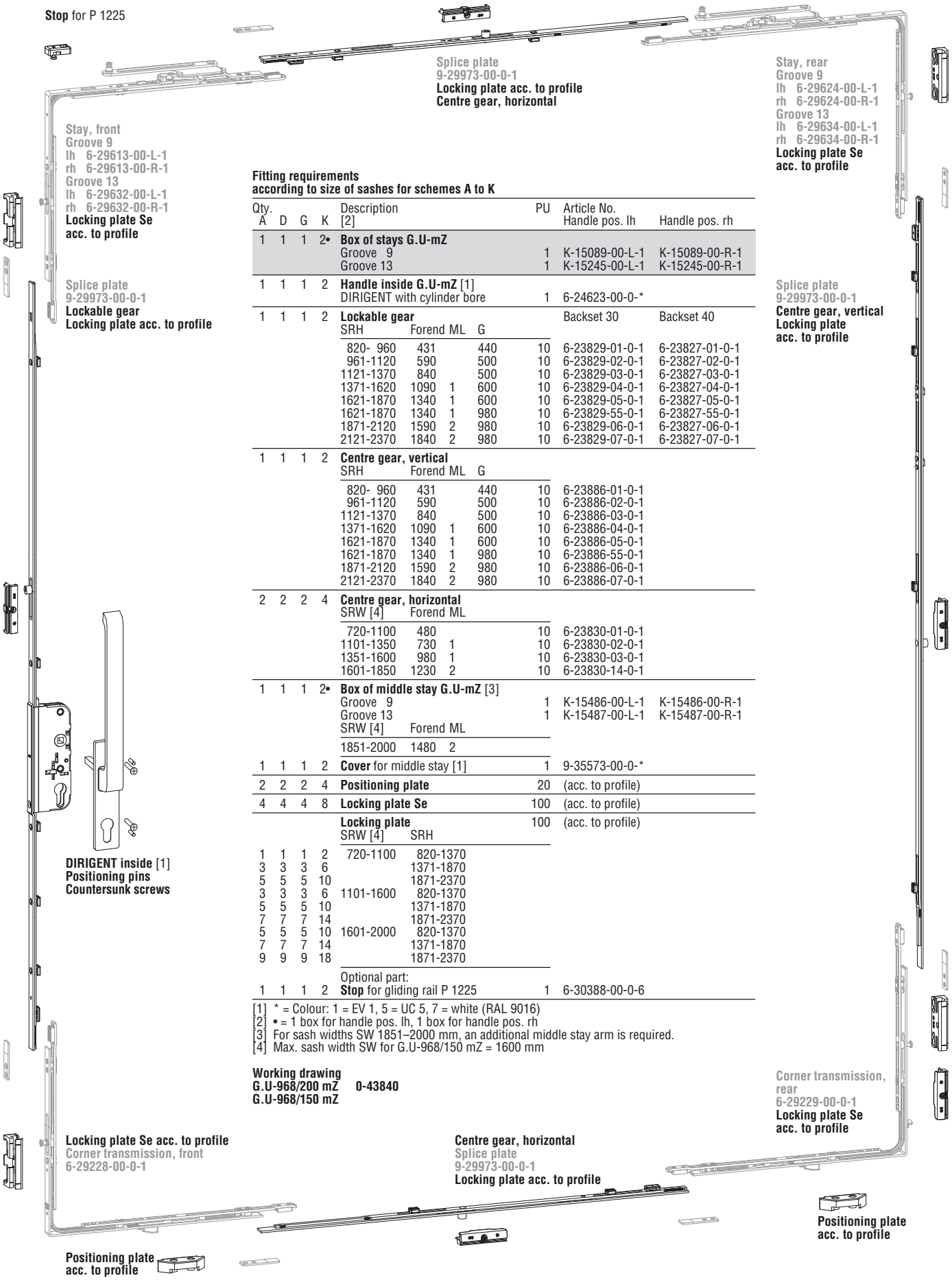

Fitting requirements
according to size of sashes for schemes A to K

Qty. A	D	G	K	Description [2]	PU	Article No. Handle pos. lh	Handle pos. rh
1	1	1	2•	**Box of stays G.U-mZ**			
				Groove 9	1	K-15089-00-L-1	K-15089-00-R-1
				Groove 13	1	K-15245-00-L-1	K-15245-00-R-1
1	1	1	2	**Handle inside G.U-mZ** [1]			
				DIRIGENT with cylinder bore	1	6-24623-00-0-*	
1	1	1	2	**Lockable gear**		Backset 30	Backset 40
				SRH / Forend ML / G			
				820- 960 / 431 / 440	10	6-23829-01-0-1	6-23827-01-0-1
				961-1120 / 590 / 500	10	6-23829-02-0-1	6-23827-02-0-1
				1121-1370 / 840 / 500	10	6-23829-03-0-1	6-23827-03-0-1
				1371-1620 / 1090 1 / 600	10	6-23829-04-0-1	6-23827-04-0-1
				1621-1870 / 1340 1 / 600	10	6-23829-05-0-1	6-23827-05-0-1
				1621-1870 / 1340 1 / 980	10	6-23829-55-0-1	6-23827-55-0-1
				1871-2120 / 1590 2 / 980	10	6-23829-06-0-1	6-23827-06-0-1
				2121-2370 / 1840 2 / 980	10	6-23829-07-0-1	6-23827-07-0-1
1	1	1	2	**Centre gear, vertical**			
				SRH / Forend ML / G			
				820- 960 / 431 / 440	10	6-23886-01-0-1	
				961-1120 / 590 / 500	10	6-23886-02-0-1	
				1121-1370 / 840 / 500	10	6-23886-03-0-1	
				1371-1620 / 1090 1 / 600	10	6-23886-04-0-1	
				1621-1870 / 1340 1 / 600	10	6-23886-05-0-1	
				1621-1870 / 1340 1 / 980	10	6-23886-55-0-1	
				1871-2120 / 1590 2 / 980	10	6-23886-06-0-1	
				2121-2370 / 1840 2 / 980	10	6-23886-07-0-1	
2	2	2	4	**Centre gear, horizontal**			
				SRW [4] / Forend ML			
				720-1100 / 480	10	6-23830-01-0-1	
				1101-1350 / 730 1	10	6-23830-02-0-1	
				1351-1600 / 980 1	10	6-23830-03-0-1	
				1601-1850 / 1230 2	10	6-23830-14-0-1	
1	1	1	2•	**Box of middle stay G.U-mZ** [3]			
				Groove 9	1	K-15486-00-L-1	K-15486-00-R-1
				Groove 13	1	K-15487-00-L-1	K-15487-00-R-1
				SRW [4] / Forend ML			
				1851-2000 / 1480 2			
1	1	1	2	**Cover** for middle stay [1]	1	9-35573-00-0-*	
2	2	2	4	**Positioning plate**	20	(acc. to profile)	
4	4	4	8	**Locking plate Se**	100	(acc. to profile)	
				Locking plate	100	(acc. to profile)	
				SRW [4] / SRH			
1	1	1	2	720-1100 / 820-1370			
3	3	3	6	1371-1870			
5	5	5	10	1871-2370			
3	3	3	6	1101-1600 / 820-1370			
5	5	5	10	1371-1870			
7	7	7	14	1871-2370			
5	5	5	10	1601-2000 / 820-1370			
7	7	7	14	1371-1870			
9	9	9	18	1871-2370			
				Optional part:			
1	1	1	2	**Stop** for gliding rail P 1225	1	6-30388-00-0-6	

[1] * = Colour: 1 = EV 1, 5 = UC 5, 7 = white (RAL 9016)
[2] • = 1 box for handle pos. lh, 1 box for handle pos. rh
[3] For sash widths SW 1851–2000 mm, an additional middle stay arm is required.
[4] Max. sash width SW for G.U-968/150 mZ = 1600 mm

Working drawing
G.U-968/200 mZ 0-43840
G.U-968/150 mZ

with geared handle inside, groove position 9 and 13

WK 2

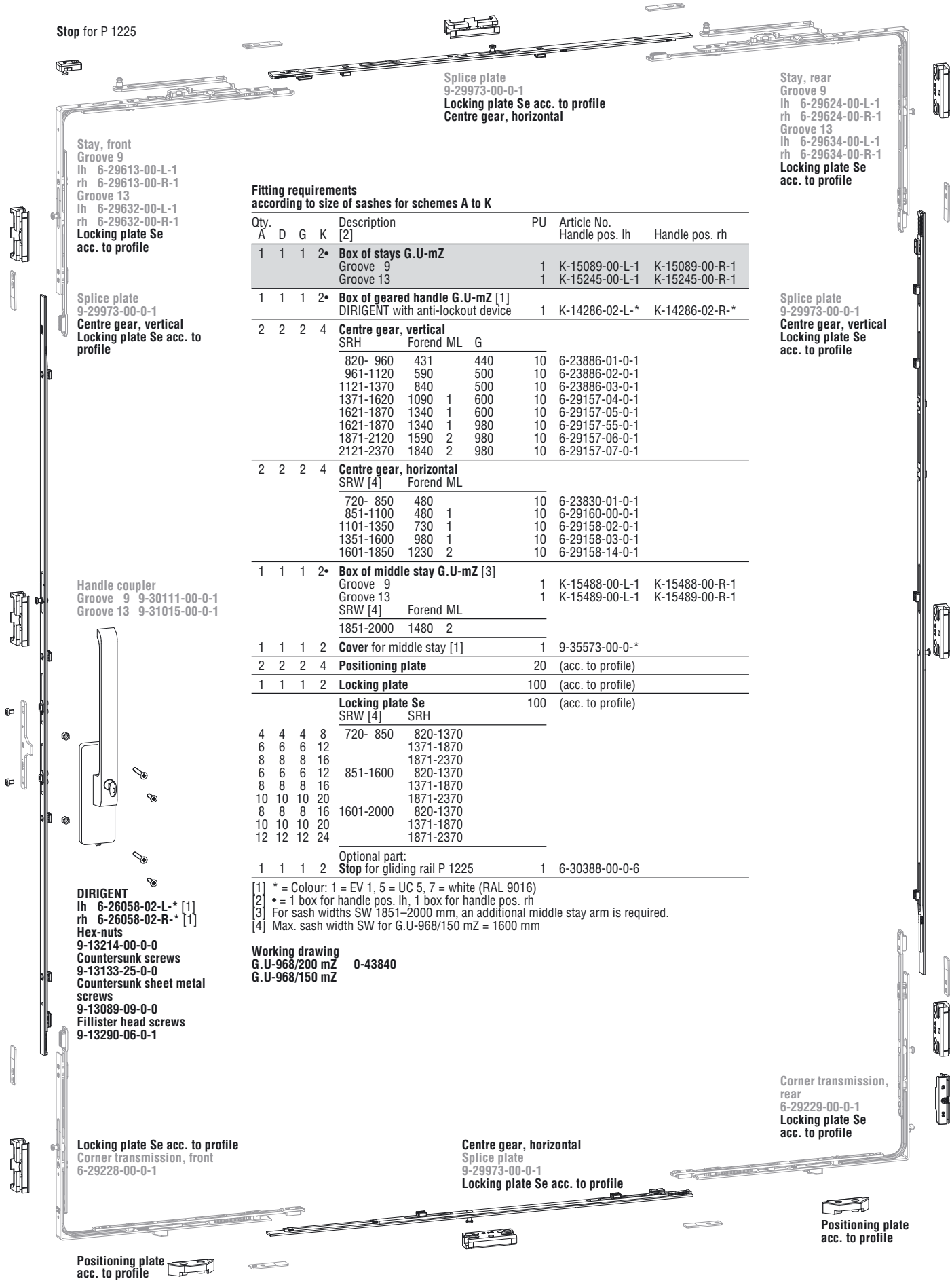

Fitting requirements according to size of sashes for schemes A to K

Qty. A	D	G	K	Description [2]				PU	Article No. Handle pos. lh	Handle pos. rh
1	1	1	2•	**Box of stays G.U-mZ**						
				Groove 9				1	K-15089-00-L-1	K-15089-00-R-1
				Groove 13				1	K-15245-00-L-1	K-15245-00-R-1
1	1	1	2•	**Box of geared handle G.U-mZ** [1]						
				DIRIGENT with anti-lockout device				1	K-14286-02-L-*	K-14286-02-R-*
2	2	2	4	**Centre gear, vertical**						
				SRH	Forend	ML	G			
				820- 960	431		440	10	6-23886-01-0-1	
				961-1120	590		500	10	6-23886-02-0-1	
				1121-1370	840		500	10	6-23886-03-0-1	
				1371-1620	1090	1	600	10	6-29157-04-0-1	
				1621-1870	1340	1	600	10	6-29157-05-0-1	
				1621-1870	1340	1	980	10	6-29157-55-0-1	
				1871-2120	1590	2	980	10	6-29157-06-0-1	
				2121-2370	1840	2	980	10	6-29157-07-0-1	
2	2	2	4	**Centre gear, horizontal**						
				SRW [4]	Forend	ML				
				720- 850	480			10	6-23830-01-0-1	
				851-1100	480	1		10	6-29160-00-0-1	
				1101-1350	730	1		10	6-29158-02-0-1	
				1351-1600	980	1		10	6-29158-03-0-1	
				1601-1850	1230	2		10	6-29158-14-0-1	
1	1	1	2•	**Box of middle stay G.U-mZ** [3]						
				Groove 9				1	K-15488-00-L-1	K-15488-00-R-1
				Groove 13				1	K-15489-00-L-1	K-15489-00-R-1
				SRW [4]	Forend	ML				
				1851-2000	1480	2				
1	1	1	2	**Cover** for middle stay [1]				1	9-35573-00-0-*	
2	2	2	4	**Positioning plate**				20	(acc. to profile)	
1	1	1	2	**Locking plate**				100	(acc. to profile)	
				Locking plate Se				100	(acc. to profile)	
				SRW [4]	SRH					
4	4	4	8	720- 850	820-1370					
6	6	6	12		1371-1870					
8	8	8	16		1871-2370					
6	6	6	12	851-1600	820-1370					
8	8	8	16		1371-1870					
10	10	10	20		1871-2370					
8	8	8	16	1601-2000	820-1370					
10	10	10	20		1371-1870					
12	12	12	24		1871-2370					
				Optional part:						
1	1	1	2	**Stop** for gliding rail P 1225				1	6-30388-00-0-6	

[1] * = Colour: 1 = EV 1, 5 = UC 5, 7 = white (RAL 9016)
[2] • = 1 box for handle pos. lh, 1 box for handle pos. rh
[3] For sash widths SW 1851–2000 mm, an additional middle stay arm is required.
[4] Max. sash width SW for G.U-968/150 mZ = 1600 mm

Working drawing
G.U-968/200 mZ 0-43840
G.U-968/150 mZ

with lockable gear, groove position 9 and 13

WK 2

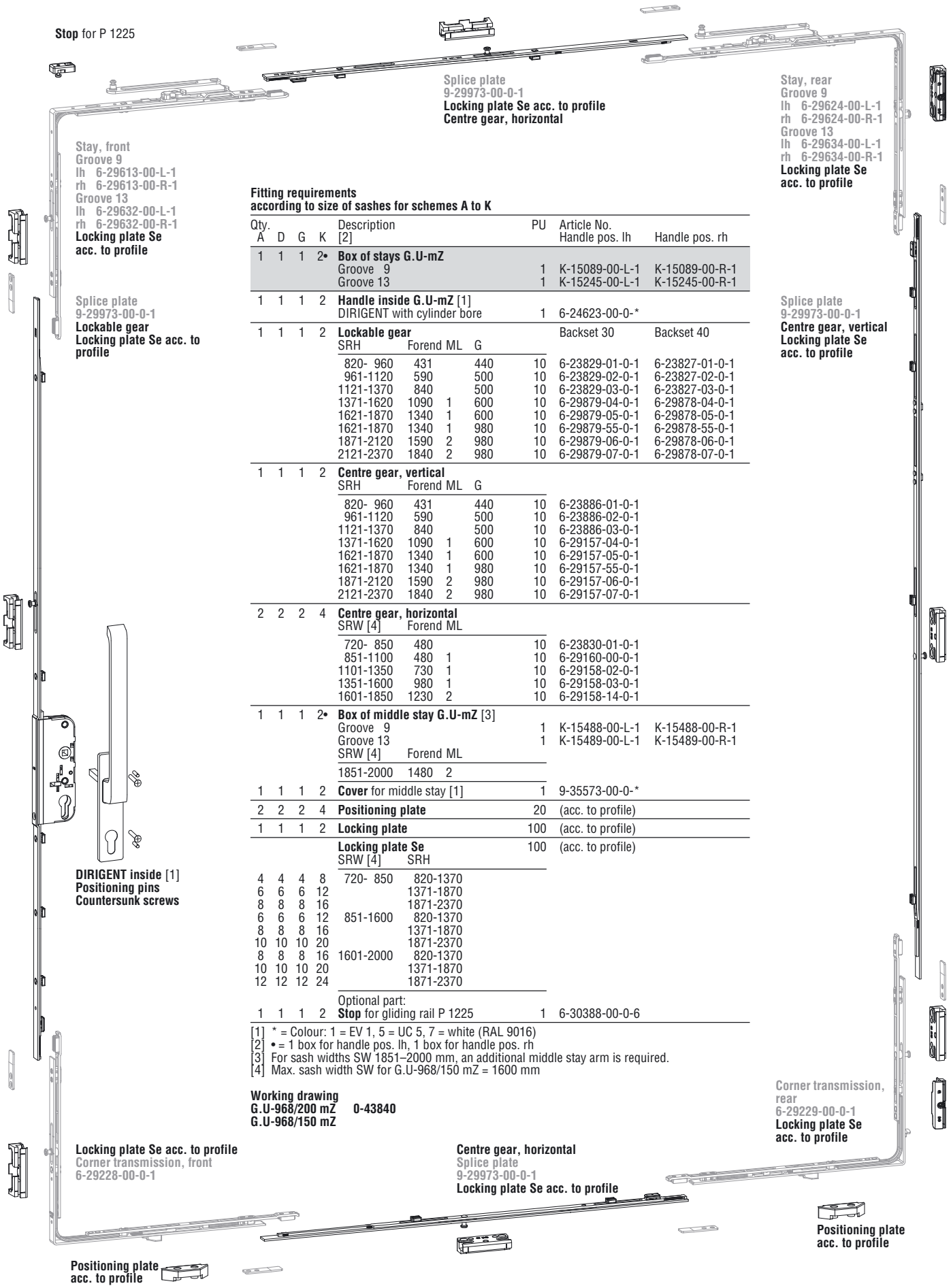

Fitting requirements according to size of sashes for schemes A to K

Qty. A	D	G	K	Description [2]	PU	Article No. Handle pos. lh	Handle pos. rh
1	1	1	2•	**Box of stays G.U-mZ**			
				Groove 9	1	K-15089-00-L-1	K-15089-00-R-1
				Groove 13	1	K-15245-00-L-1	K-15245-00-R-1
1	1	1	2	**Handle inside G.U-mZ** [1]			
				DIRIGENT with cylinder bore	1	6-24623-00-0-*	
1	1	1	2	**Lockable gear**		Backset 30	Backset 40
				SRH / Forend ML / G			
				820- 960 / 431 / 440	10	6-23829-01-0-1	6-23827-01-0-1
				961-1120 / 590 / 500	10	6-23829-02-0-1	6-23827-02-0-1
				1121-1370 / 840 / 500	10	6-23829-03-0-1	6-23827-03-0-1
				1371-1620 / 1090 1 / 600	10	6-29879-04-0-1	6-29878-04-0-1
				1621-1870 / 1340 1 / 600	10	6-29879-05-0-1	6-29878-05-0-1
				1621-1870 / 1340 1 / 980	10	6-29879-55-0-1	6-29878-55-0-1
				1871-2120 / 1590 2 / 980	10	6-29879-06-0-1	6-29878-06-0-1
				2121-2370 / 1840 2 / 980	10	6-29879-07-0-1	6-29878-07-0-1
1	1	1	2	**Centre gear, vertical**			
				SRH / Forend ML / G			
				820- 960 / 431 / 440	10	6-23886-01-0-1	
				961-1120 / 590 / 500	10	6-23886-02-0-1	
				1121-1370 / 840 / 500	10	6-23886-03-0-1	
				1371-1620 / 1090 1 / 600	10	6-29157-04-0-1	
				1621-1870 / 1340 1 / 600	10	6-29157-05-0-1	
				1621-1870 / 1340 1 / 980	10	6-29157-55-0-1	
				1871-2120 / 1590 2 / 980	10	6-29157-06-0-1	
				2121-2370 / 1840 2 / 980	10	6-29157-07-0-1	
2	2	2	4	**Centre gear, horizontal**			
				SRW [4] / Forend ML			
				720- 850 / 480	10	6-23830-01-0-1	
				851-1100 / 480 1	10	6-29160-00-0-1	
				1101-1350 / 730 1	10	6-29158-02-0-1	
				1351-1600 / 980 1	10	6-29158-03-0-1	
				1601-1850 / 1230 2	10	6-29158-14-0-1	
1	1	1	2•	**Box of middle stay G.U-mZ** [3]			
				Groove 9	1	K-15488-00-L-1	K-15488-00-R-1
				Groove 13	1	K-15489-00-L-1	K-15489-00-R-1
				SRW [4] / Forend ML			
				1851-2000 / 1480 2			
1	1	1	2	**Cover** for middle stay [1]	1	9-35573-00-0-*	
2	2	2	4	**Positioning plate**	20	(acc. to profile)	
1	1	1	2	**Locking plate**	100	(acc. to profile)	
				Locking plate Se	100	(acc. to profile)	
				SRW [4] / SRH			
4	4	4	8	720- 850 / 820-1370			
6	6	6	12	1371-1870			
8	8	8	16	1871-2370			
6	6	6	12	851-1600 / 820-1370			
8	8	8	16	1371-1870			
10	10	10	20	1871-2370			
8	8	8	16	1601-2000 / 820-1370			
10	10	10	20	1371-1870			
12	12	12	24	1871-2370			
				Optional part:			
1	1	1	2	**Stop** for gliding rail P 1225	1	6-30388-00-0-6	

[1] * = Colour: 1 = EV 1, 5 = UC 5, 7 = white (RAL 9016)
[2] • = 1 box for handle pos. lh, 1 box for handle pos. rh
[3] For sash widths SW 1851–2000 mm, an additional middle stay arm is required.
[4] Max. sash width SW for G.U-968/150 mZ = 1600 mm

Working drawing
G.U-968/200 mZ 0-43840
G.U-968/150 mZ

with rebate shoot bolt, groove position 9 and 13

Basic security

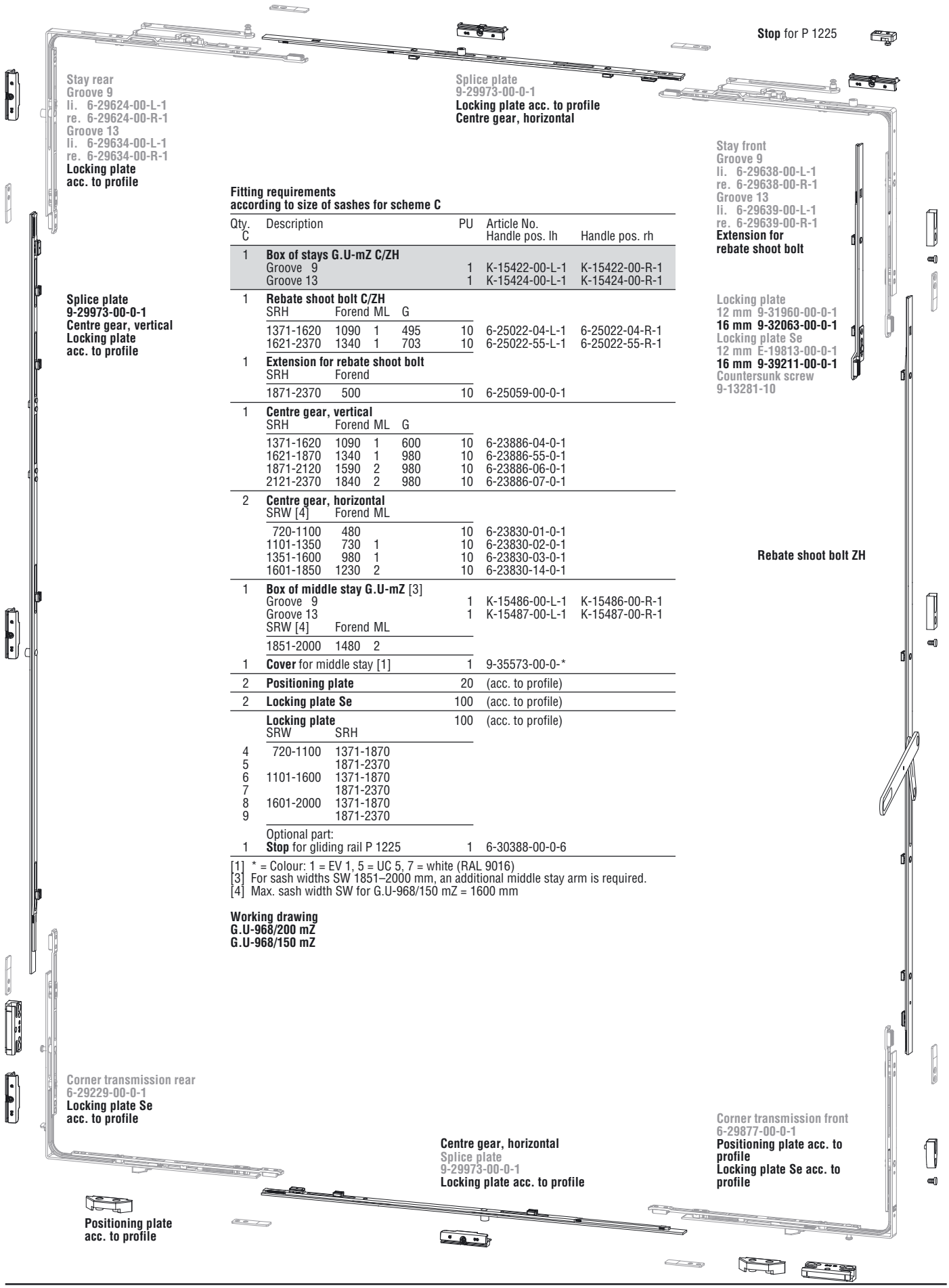

Fitting requirements
according to size of sashes for scheme C

Qty. C	Description				PU	Article No. Handle pos. lh	Handle pos. rh
1	**Box of stays G.U-mZ C/ZH**						
	Groove 9				1	K-15422-00-L-1	K-15422-00-R-1
	Groove 13				1	K-15424-00-L-1	K-15424-00-R-1
1	**Rebate shoot bolt C/ZH**						
	SRH	Forend	ML	G			
	1371-1620	1090	1	495	10	6-25022-04-L-1	6-25022-04-R-1
	1621-2370	1340	1	703	10	6-25022-55-L-1	6-25022-55-R-1
1	**Extension for rebate shoot bolt**						
	SRH	Forend					
	1871-2370	500			10	6-25059-00-0-1	
1	**Centre gear, vertical**						
	SRH	Forend	ML	G			
	1371-1620	1090	1	600	10	6-23886-04-0-1	
	1621-1870	1340	1	980	10	6-23886-55-0-1	
	1871-2120	1590	2	980	10	6-23886-06-0-1	
	2121-2370	1840	2	980	10	6-23886-07-0-1	
2	**Centre gear, horizontal**						
	SRW [4]	Forend	ML				
	720-1100	480			10	6-23830-01-0-1	
	1101-1350	730	1		10	6-23830-02-0-1	
	1351-1600	980	1		10	6-23830-03-0-1	
	1601-1850	1230	2		10	6-23830-14-0-1	
1	**Box of middle stay G.U-mZ** [3]						
	Groove 9				1	K-15486-00-L-1	K-15486-00-R-1
	Groove 13				1	K-15487-00-L-1	K-15487-00-R-1
	SRW [4]	Forend	ML				
	1851-2000	1480	2				
1	**Cover** for middle stay [1]				1	9-35573-00-0-*	
2	**Positioning plate**				20	(acc. to profile)	
2	**Locking plate Se**				100	(acc. to profile)	
	Locking plate				100	(acc. to profile)	
	SRW	SRH					
4	720-1100	1371-1870					
5		1871-2370					
6	1101-1600	1371-1870					
7		1871-2370					
8	1601-2000	1371-1870					
9		1871-2370					
	Optional part:						
1	**Stop** for gliding rail P 1225				1	6-30388-00-0-6	

[1] * = Colour: 1 = EV 1, 5 = UC 5, 7 = white (RAL 9016)
[3] For sash widths SW 1851–2000 mm, an additional middle stay arm is required.
[4] Max. sash width SW for G.U-968/150 mZ = 1600 mm

Working drawing
G.U-968/200 mZ
G.U-968/150 mZ

with geared handle inside, groove position 9 and 13

Basic security

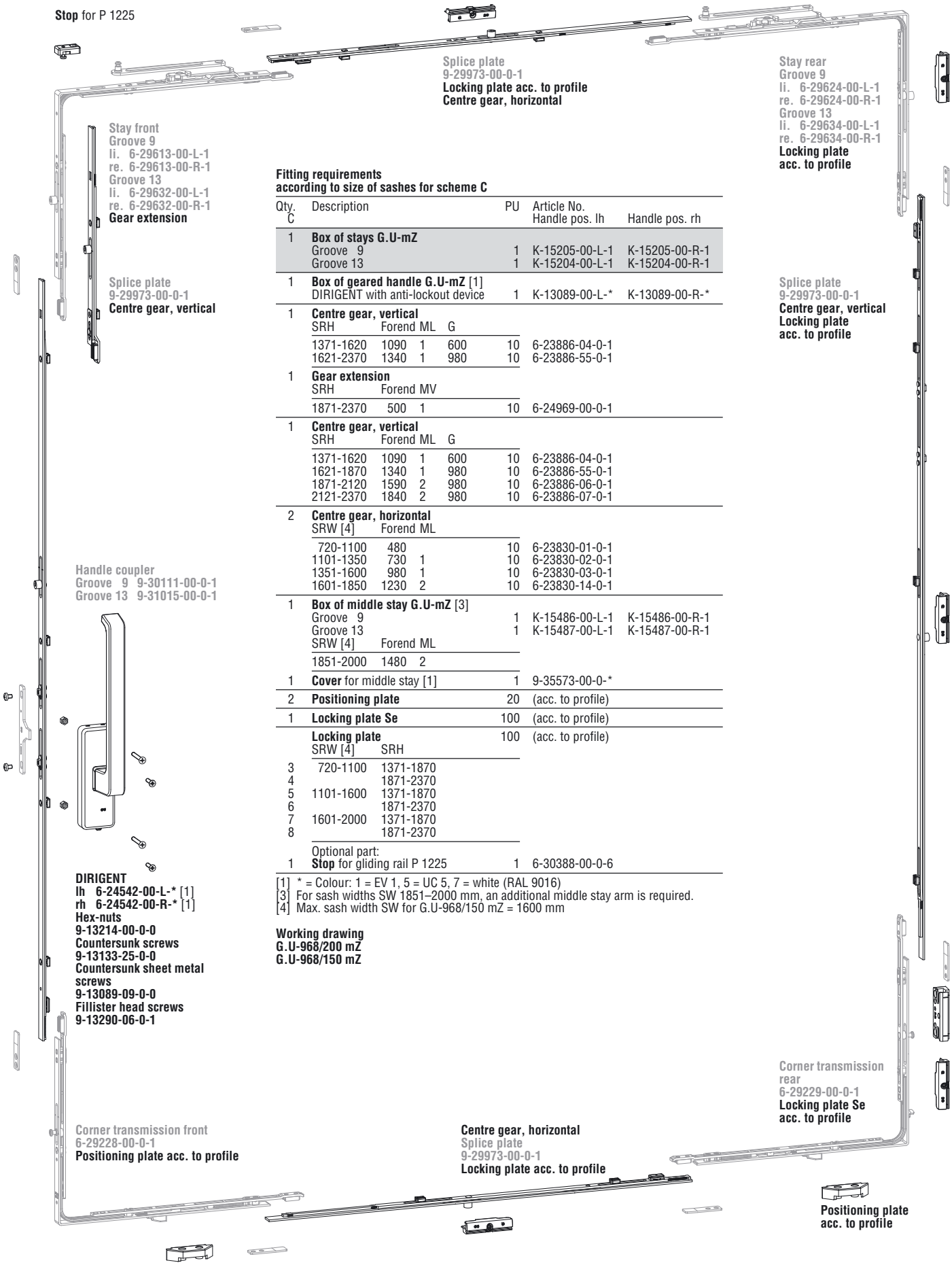

Fitting requirements
according to size of sashes for scheme C

Qty. C	Description				PU	Article No. Handle pos. lh	Handle pos. rh
1	**Box of stays G.U-mZ**						
	Groove 9				1	K-15205-00-L-1	K-15205-00-R-1
	Groove 13				1	K-15204-00-L-1	K-15204-00-R-1
1	**Box of geared handle G.U-mZ** [1]						
	DIRIGENT with anti-lockout device				1	K-13089-00-L-*	K-13089-00-R-*
1	**Centre gear, vertical**						
	SRH	Forend	ML	G			
	1371-1620	1090	1	600	10	6-23886-04-0-1	
	1621-2370	1340	1	980	10	6-23886-55-0-1	
1	**Gear extension**						
	SRH	Forend	MV				
	1871-2370	500	1		10	6-24969-00-0-1	
1	**Centre gear, vertical**						
	SRH	Forend	ML	G			
	1371-1620	1090	1	600	10	6-23886-04-0-1	
	1621-1870	1340	1	980	10	6-23886-55-0-1	
	1871-2120	1590	2	980	10	6-23886-06-0-1	
	2121-2370	1840	2	980	10	6-23886-07-0-1	
2	**Centre gear, horizontal**						
	SRW [4]	Forend	ML				
	720-1100	480			10	6-23830-01-0-1	
	1101-1350	730	1		10	6-23830-02-0-1	
	1351-1600	980	1		10	6-23830-03-0-1	
	1601-1850	1230	2		10	6-23830-14-0-1	
1	**Box of middle stay G.U-mZ** [3]						
	Groove 9				1	K-15486-00-L-1	K-15486-00-R-1
	Groove 13				1	K-15487-00-L-1	K-15487-00-R-1
	SRW [4]	Forend	ML				
	1851-2000	1480	2				
1	**Cover** for middle stay [1]				1	9-35573-00-0-*	
2	**Positioning plate**				20	(acc. to profile)	
1	**Locking plate Se**				100	(acc. to profile)	
	Locking plate				100	(acc. to profile)	
	SRW [4]	SRH					
3	720-1100	1371-1870					
4		1871-2370					
5	1101-1600	1371-1870					
6		1871-2370					
7	1601-2000	1371-1870					
8		1871-2370					
	Optional part:						
1	**Stop** for gliding rail P 1225				1	6-30388-00-0-6	

[1] * = Colour: 1 = EV 1, 5 = UC 5, 7 = white (RAL 9016)
[3] For sash widths SW 1851–2000 mm, an additional middle stay arm is required.
[4] Max. sash width SW for G.U-968/150 mZ = 1600 mm

Working drawing
G.U-968/200 mZ
G.U-968/150 mZ

with rebate shoot bolt, groove position 9 and 13

Basic security

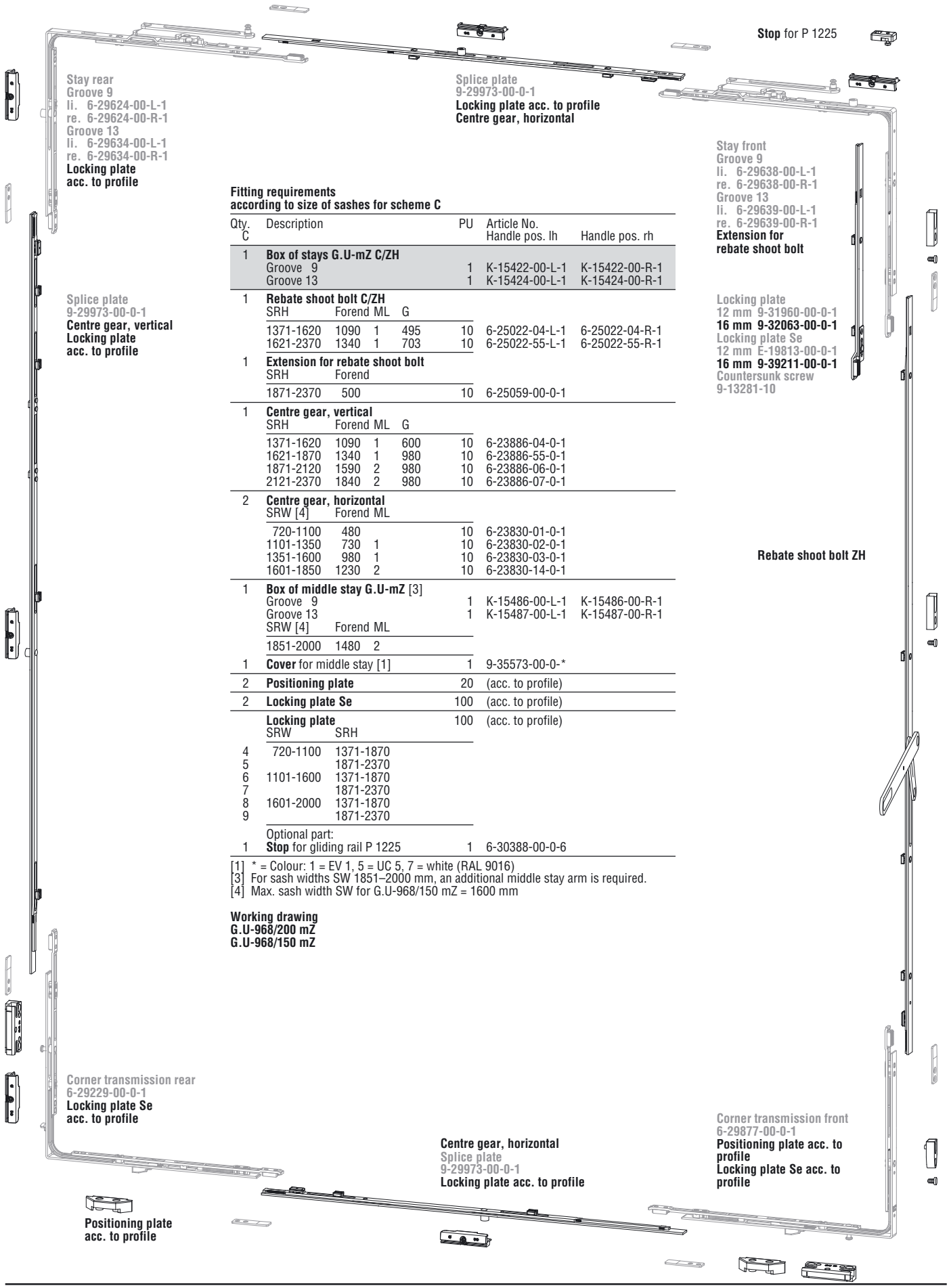

Fitting requirements
according to size of sashes for scheme C

Qty. C	Description				PU	Article No. Handle pos. lh	Handle pos. rh
1	**Box of stays G.U-mZ C/ZH**						
	Groove 9				1	K-15422-00-L-1	K-15422-00-R-1
	Groove 13				1	K-15424-00-L-1	K-15424-00-R-1
1	**Rebate shoot bolt C/ZH**						
	SRH	Forend	ML	G			
	1371-1620	1090	1	495	10	6-25022-04-L-1	6-25022-04-R-1
	1621-2370	1340	1	703	10	6-25022-55-L-1	6-25022-55-R-1
1	**Extension for rebate shoot bolt**						
	SRH	Forend					
	1871-2370	500			10	6-25059-00-0-1	
1	**Centre gear, vertical**						
	SRH	Forend	ML	G			
	1371-1620	1090	1	600	10	6-23886-04-0-1	
	1621-1870	1340	1	980	10	6-23886-55-0-1	
	1871-2120	1590	2	980	10	6-23886-06-0-1	
	2121-2370	1840	2	980	10	6-23886-07-0-1	
2	**Centre gear, horizontal**						
	SRW [4]	Forend	ML				
	720-1100	480			10	6-23830-01-0-1	
	1101-1350	730	1		10	6-23830-02-0-1	
	1351-1600	980	1		10	6-23830-03-0-1	
	1601-1850	1230	2		10	6-23830-14-0-1	
1	**Box of middle stay G.U-mZ** [3]						
	Groove 9				1	K-15486-00-L-1	K-15486-00-R-1
	Groove 13				1	K-15487-00-L-1	K-15487-00-R-1
	SRW [4]	Forend	ML				
	1851-2000	1480	2				
1	**Cover** for middle stay [1]				1	9-35573-00-0-*	
2	**Positioning plate**				20	(acc. to profile)	
2	**Locking plate Se**				100	(acc. to profile)	
	Locking plate				100	(acc. to profile)	
	SRW	SRH					
4	720-1100	1371-1870					
5		1871-2370					
6	1101-1600	1371-1870					
7		1871-2370					
8	1601-2000	1371-1870					
9		1871-2370					
	Optional part:						
1	**Stop** for gliding rail P 1225				1	6-30388-00-0-6	

[1] * = Colour: 1 = EV 1, 5 = UC 5, 7 = white (RAL 9016)
[3] For sash widths SW 1851–2000 mm, an additional middle stay arm is required.
[4] Max. sash width SW for G.U-968/150 mZ = 1600 mm

Working drawing
G.U-968/200 mZ
G.U-968/150 mZ

with lockable gear, groove position 9 and 13

Basic security

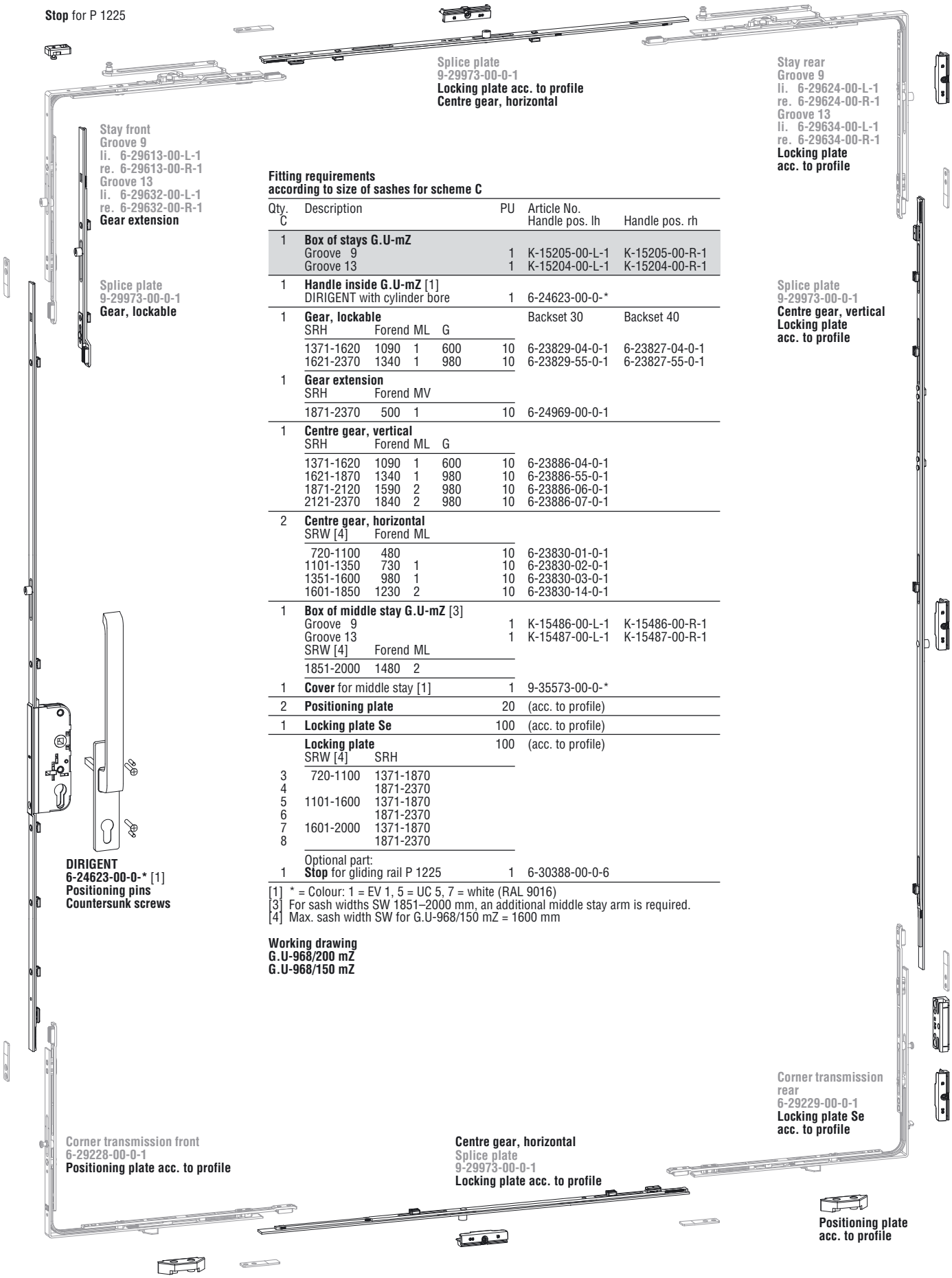

Fitting requirements
according to size of sashes for scheme C

Qty. C	Description				PU	Article No. Handle pos. lh	Handle pos. rh
1	**Box of stays G.U-mZ**						
	Groove 9				1	K-15205-00-L-1	K-15205-00-R-1
	Groove 13				1	K-15204-00-L-1	K-15204-00-R-1
1	**Handle inside G.U-mZ** [1]						
	DIRIGENT with cylinder bore				1	6-24623-00-0-*	
1	**Gear, lockable**					Backset 30	Backset 40
	SRH	Forend	ML	G			
	1371-1620	1090	1	600	10	6-23829-04-0-1	6-23827-04-0-1
	1621-2370	1340	1	980	10	6-23829-55-0-1	6-23827-55-0-1
1	**Gear extension**						
	SRH	Forend	MV				
	1871-2370	500	1		10	6-24969-00-0-1	
1	**Centre gear, vertical**						
	SRH	Forend	ML	G			
	1371-1620	1090	1	600	10	6-23886-04-0-1	
	1621-1870	1340	1	980	10	6-23886-55-0-1	
	1871-2120	1590	2	980	10	6-23886-06-0-1	
	2121-2370	1840	2	980	10	6-23886-07-0-1	
2	**Centre gear, horizontal**						
	SRW [4]	Forend	ML				
	720-1100	480			10	6-23830-01-0-1	
	1101-1350	730	1		10	6-23830-02-0-1	
	1351-1600	980	1		10	6-23830-03-0-1	
	1601-1850	1230	2		10	6-23830-14-0-1	
1	**Box of middle stay G.U-mZ** [3]						
	Groove 9				1	K-15486-00-L-1	K-15486-00-R-1
	Groove 13				1	K-15487-00-L-1	K-15487-00-R-1
	SRW [4]	Forend	ML				
	1851-2000	1480	2				
1	**Cover** for middle stay [1]				1	9-35573-00-0-*	
2	**Positioning plate**				20	(acc. to profile)	
1	**Locking plate Se**				100	(acc. to profile)	
	Locking plate				100	(acc. to profile)	
	SRW [4]	SRH					
3	720-1100	1371-1870					
4		1871-2370					
5	1101-1600	1371-1870					
6		1871-2370					
7	1601-2000	1371-1870					
8		1871-2370					
	Optional part:						
1	**Stop** for gliding rail P 1225				1	6-30388-00-0-6	

[1] * = Colour: 1 = EV 1, 5 = UC 5, 7 = white (RAL 9016)
[3] For sash widths SW 1851–2000 mm, an additional middle stay arm is required.
[4] Max. sash width SW for G.U-968/150 mZ = 1600 mm

Working drawing
G.U-968/200 mZ
G.U-968/150 mZ

with rebate shoot bolt, groove position 9 and 13

Enhanced basic security

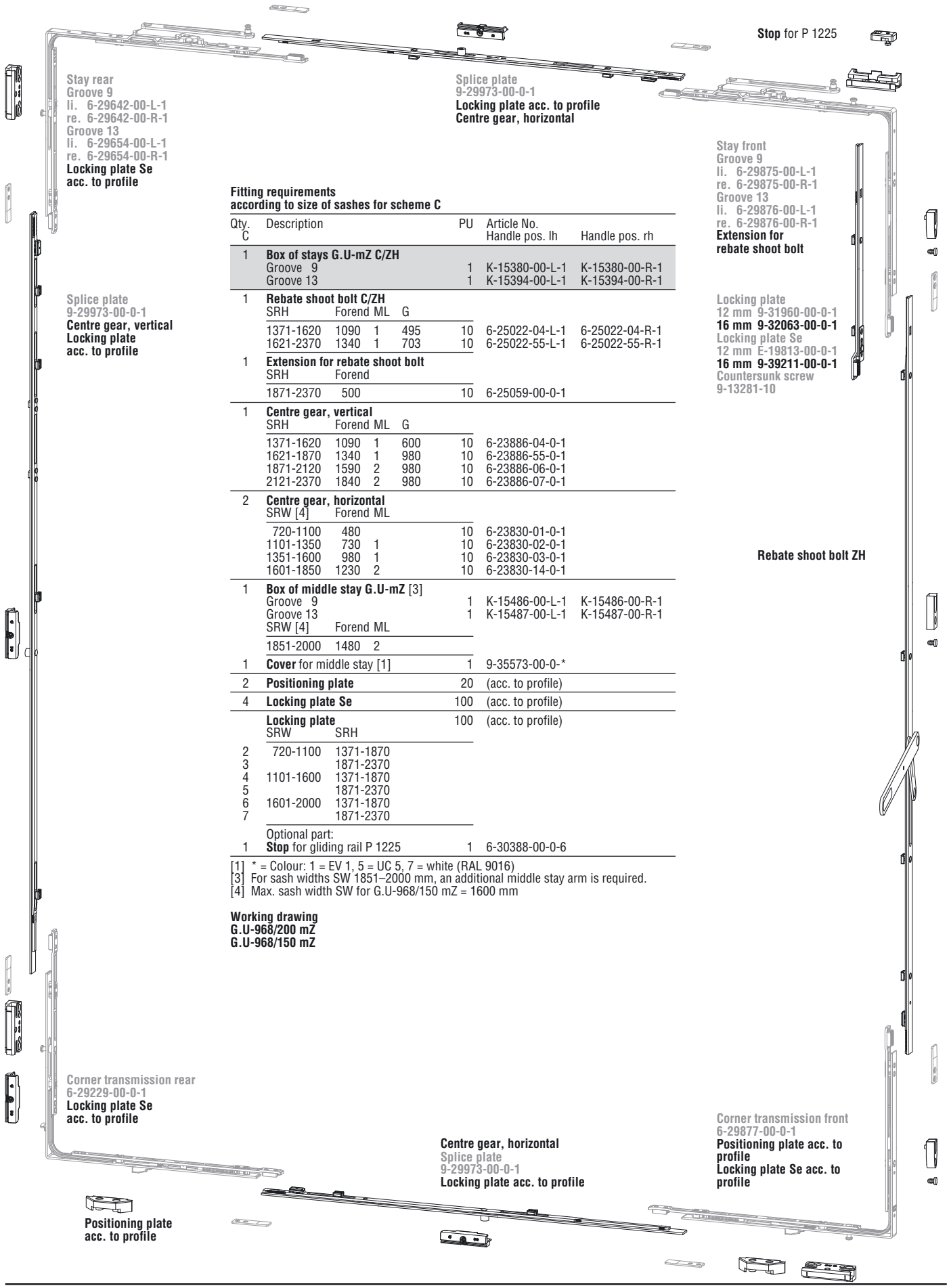

Fitting requirements
according to size of sashes for scheme C

Qty. C	Description				PU	Article No. Handle pos. lh	Handle pos. rh
1	**Box of stays G.U-mZ C/ZH**						
	Groove 9				1	K-15380-00-L-1	K-15380-00-R-1
	Groove 13				1	K-15394-00-L-1	K-15394-00-R-1
1	**Rebate shoot bolt C/ZH**						
	SRH	Forend	ML	G			
	1371-1620	1090	1	495	10	6-25022-04-L-1	6-25022-04-R-1
	1621-2370	1340	1	703	10	6-25022-55-L-1	6-25022-55-R-1
1	**Extension for rebate shoot bolt**						
	SRH	Forend					
	1871-2370	500			10	6-25059-00-0-1	
1	**Centre gear, vertical**						
	SRH	Forend	ML	G			
	1371-1620	1090	1	600	10	6-23886-04-0-1	
	1621-1870	1340	1	980	10	6-23886-55-0-1	
	1871-2120	1590	2	980	10	6-23886-06-0-1	
	2121-2370	1840	2	980	10	6-23886-07-0-1	
2	**Centre gear, horizontal**						
	SRW [4]	Forend	ML				
	720-1100	480			10	6-23830-01-0-1	
	1101-1350	730	1		10	6-23830-02-0-1	
	1351-1600	980	1		10	6-23830-03-0-1	
	1601-1850	1230	2		10	6-23830-14-0-1	
1	**Box of middle stay G.U-mZ** [3]						
	Groove 9				1	K-15486-00-L-1	K-15486-00-R-1
	Groove 13				1	K-15487-00-L-1	K-15487-00-R-1
	SRW [4]	Forend	ML				
	1851-2000	1480	2				
1	**Cover** for middle stay [1]				1	9-35573-00-0-*	
2	**Positioning plate**				20	(acc. to profile)	
4	**Locking plate Se**				100	(acc. to profile)	
	Locking plate				100	(acc. to profile)	
	SRW	SRH					
2	720-1100	1371-1870					
3		1871-2370					
4	1101-1600	1371-1870					
5		1871-2370					
6	1601-2000	1371-1870					
7		1871-2370					
	Optional part:						
1	**Stop** for gliding rail P 1225				1	6-30388-00-0-6	

[1] * = Colour: 1 = EV 1, 5 = UC 5, 7 = white (RAL 9016)
[3] For sash widths SW 1851–2000 mm, an additional middle stay arm is required.
[4] Max. sash width SW for G.U-968/150 mZ = 1600 mm

Working drawing
G.U-968/200 mZ
G.U-968/150 mZ

with geared handle inside, groove position 9 and 13

Enhanced basic security

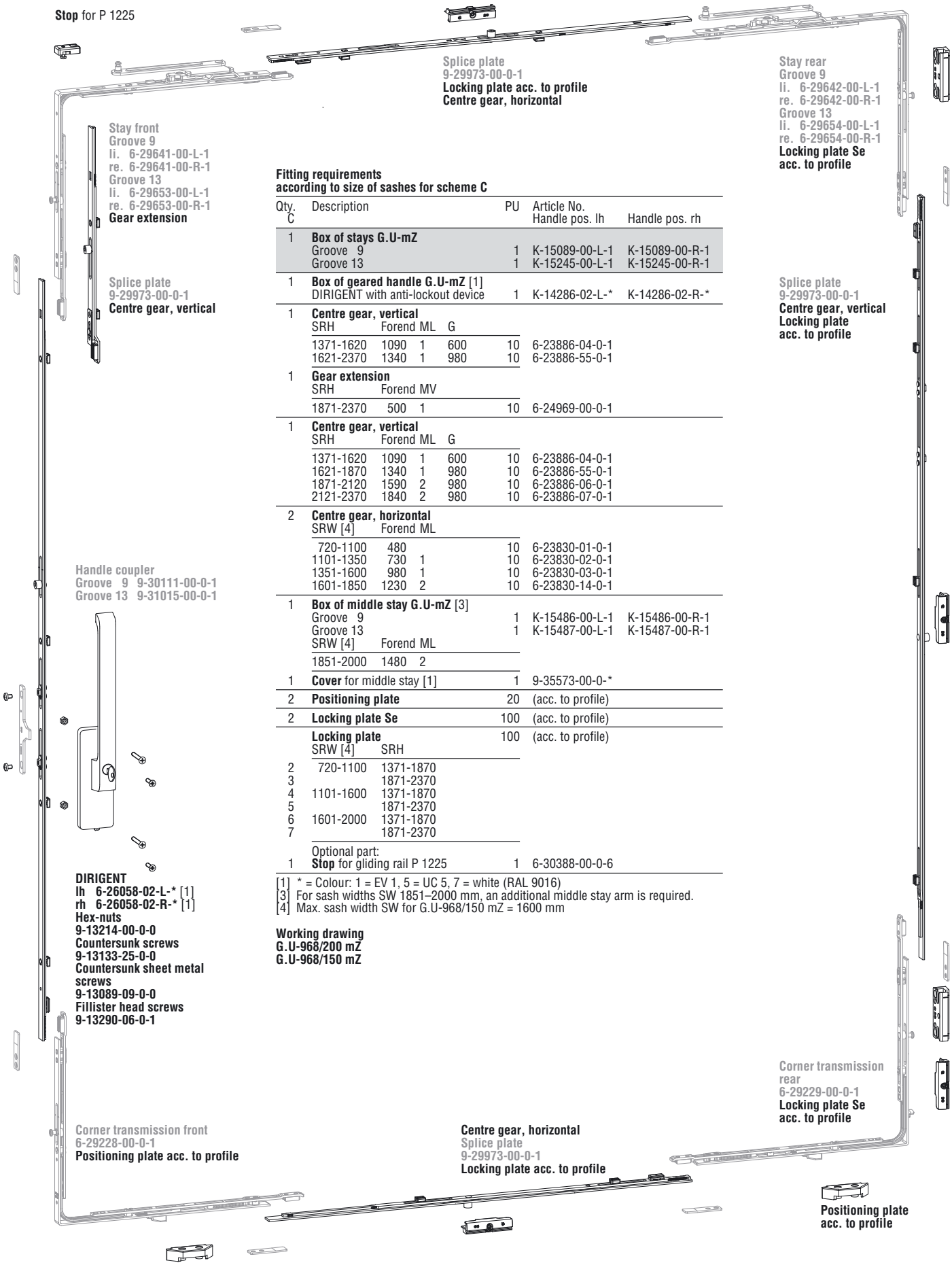

Fitting requirements
according to size of sashes for scheme C

Qty. C	Description				PU	Article No. Handle pos. lh	Handle pos. rh
1	**Box of stays G.U-mZ**						
	Groove 9				1	K-15089-00-L-1	K-15089-00-R-1
	Groove 13				1	K-15245-00-L-1	K-15245-00-R-1
1	**Box of geared handle G.U-mZ** [1]						
	DIRIGENT with anti-lockout device				1	K-14286-02-L-*	K-14286-02-R-*
1	**Centre gear, vertical**						
	SRH	Forend	ML	G			
	1371-1620	1090	1	600	10	6-23886-04-0-1	
	1621-2370	1340	1	980	10	6-23886-55-0-1	
1	**Gear extension**						
	SRH	Forend	MV				
	1871-2370	500	1		10	6-24969-00-0-1	
1	**Centre gear, vertical**						
	SRH	Forend	ML	G			
	1371-1620	1090	1	600	10	6-23886-04-0-1	
	1621-1870	1340	1	980	10	6-23886-55-0-1	
	1871-2120	1590	2	980	10	6-23886-06-0-1	
	2121-2370	1840	2	980	10	6-23886-07-0-1	
2	**Centre gear, horizontal**						
	SRW [4]	Forend	ML				
	720-1100	480			10	6-23830-01-0-1	
	1101-1350	730	1		10	6-23830-02-0-1	
	1351-1600	980	1		10	6-23830-03-0-1	
	1601-1850	1230	2		10	6-23830-14-0-1	
1	**Box of middle stay G.U-mZ** [3]						
	Groove 9				1	K-15486-00-L-1	K-15486-00-R-1
	Groove 13				1	K-15487-00-L-1	K-15487-00-R-1
	SRW [4]	Forend	ML				
	1851-2000	1480	2				
1	**Cover** for middle stay [1]				1	9-35573-00-0-*	
2	**Positioning plate**				20	(acc. to profile)	
2	**Locking plate Se**				100	(acc. to profile)	
	Locking plate				100	(acc. to profile)	
	SRW [4]	SRH					
2	720-1100	1371-1870					
3		1871-2370					
4	1101-1600	1371-1870					
5		1871-2370					
6	1601-2000	1371-1870					
7		1871-2370					
	Optional part:						
1	**Stop** for gliding rail P 1225				1	6-30388-00-0-6	

[1] * = Colour: 1 = EV 1, 5 = UC 5, 7 = white (RAL 9016)
[3] For sash widths SW 1851–2000 mm, an additional middle stay arm is required.
[4] Max. sash width SW for G.U-968/150 mZ = 1600 mm

Working drawing
G.U-968/200 mZ
G.U-968/150 mZ

with rebate shoot bolt, groove position 9 and 13

Enhanced basic security

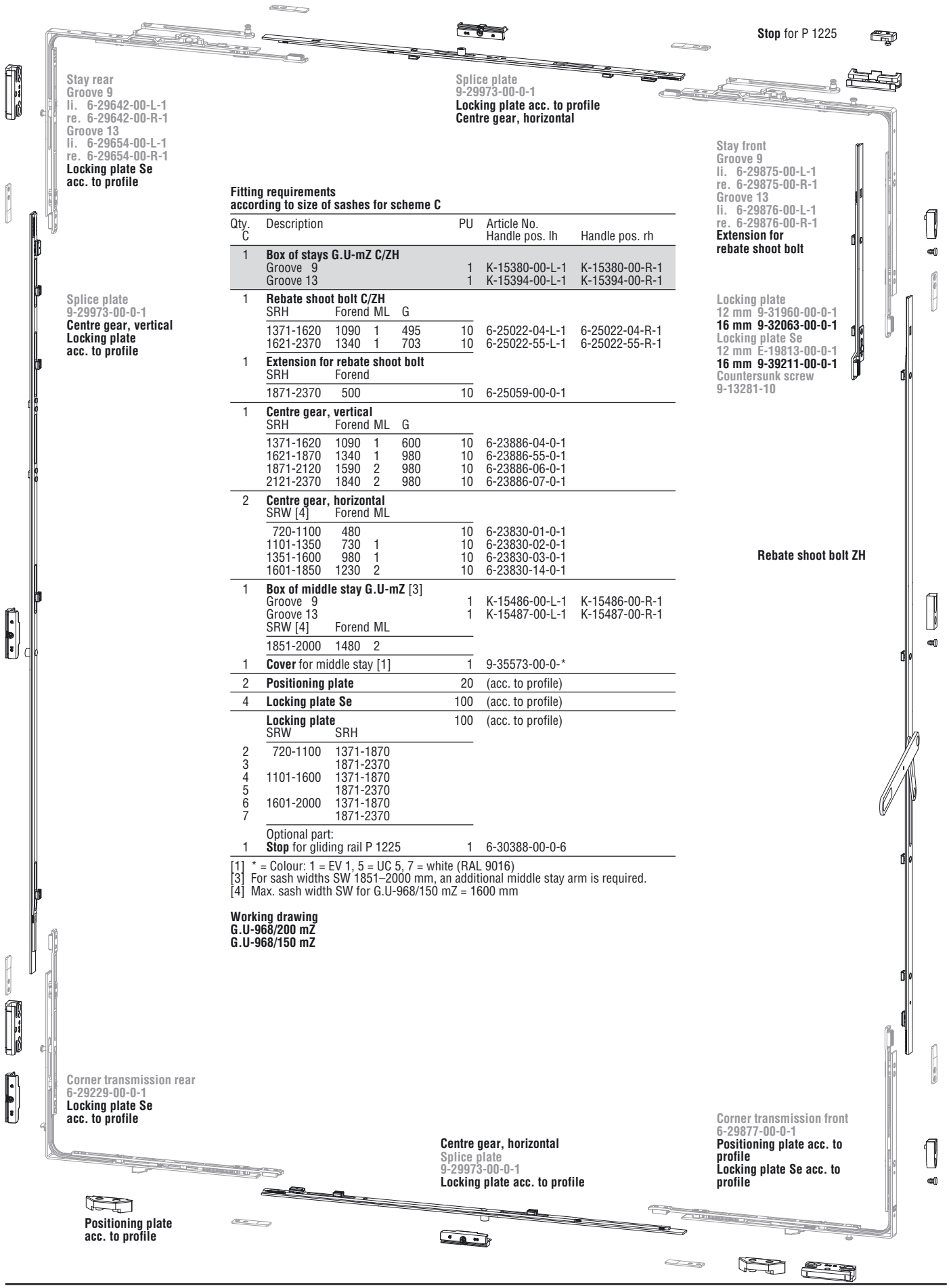

Fitting requirements
according to size of sashes for scheme C

Qty. C	Description				PU	Article No. Handle pos. lh	Handle pos. rh
1	**Box of stays G.U-mZ C/ZH**						
	Groove 9				1	K-15380-00-L-1	K-15380-00-R-1
	Groove 13				1	K-15394-00-L-1	K-15394-00-R-1
1	**Rebate shoot bolt C/ZH**						
	SRH	Forend	ML	G			
	1371-1620	1090	1	495	10	6-25022-04-L-1	6-25022-04-R-1
	1621-2370	1340	1	703	10	6-25022-55-L-1	6-25022-55-R-1
1	**Extension for rebate shoot bolt**						
	SRH	Forend					
	1871-2370	500			10	6-25059-00-0-1	
1	**Centre gear, vertical**						
	SRH	Forend	ML	G			
	1371-1620	1090	1	600	10	6-23886-04-0-1	
	1621-1870	1340	1	980	10	6-23886-55-0-1	
	1871-2120	1590	2	980	10	6-23886-06-0-1	
	2121-2370	1840	2	980	10	6-23886-07-0-1	
2	**Centre gear, horizontal**						
	SRW [4]	Forend	ML				
	720-1100	480			10	6-23830-01-0-1	
	1101-1350	730	1		10	6-23830-02-0-1	
	1351-1600	980	1		10	6-23830-03-0-1	
	1601-1850	1230	2		10	6-23830-14-0-1	
1	**Box of middle stay G.U-mZ** [3]						
	Groove 9				1	K-15486-00-L-1	K-15486-00-R-1
	Groove 13				1	K-15487-00-L-1	K-15487-00-R-1
	SRW [4]	Forend	ML				
	1851-2000	1480	2				
1	**Cover** for middle stay [1]				1	9-35573-00-0-*	
2	**Positioning plate**				20	(acc. to profile)	
4	**Locking plate Se**				100	(acc. to profile)	
	Locking plate				100	(acc. to profile)	
	SRW	SRH					
2	720-1100	1371-1870					
3		1871-2370					
4	1101-1600	1371-1870					
5		1871-2370					
6	1601-2000	1371-1870					
7		1871-2370					
	Optional part:						
1	**Stop** for gliding rail P 1225				1	6-30388-00-0-6	

[1] * = Colour: 1 = EV 1, 5 = UC 5, 7 = white (RAL 9016)
[3] For sash widths SW 1851–2000 mm, an additional middle stay arm is required.
[4] Max. sash width SW for G.U-968/150 mZ = 1600 mm

Working drawing
G.U-968/200 mZ
G.U-968/150 mZ

with lockable gear, groove position 9 and 13

Enhanced basic security

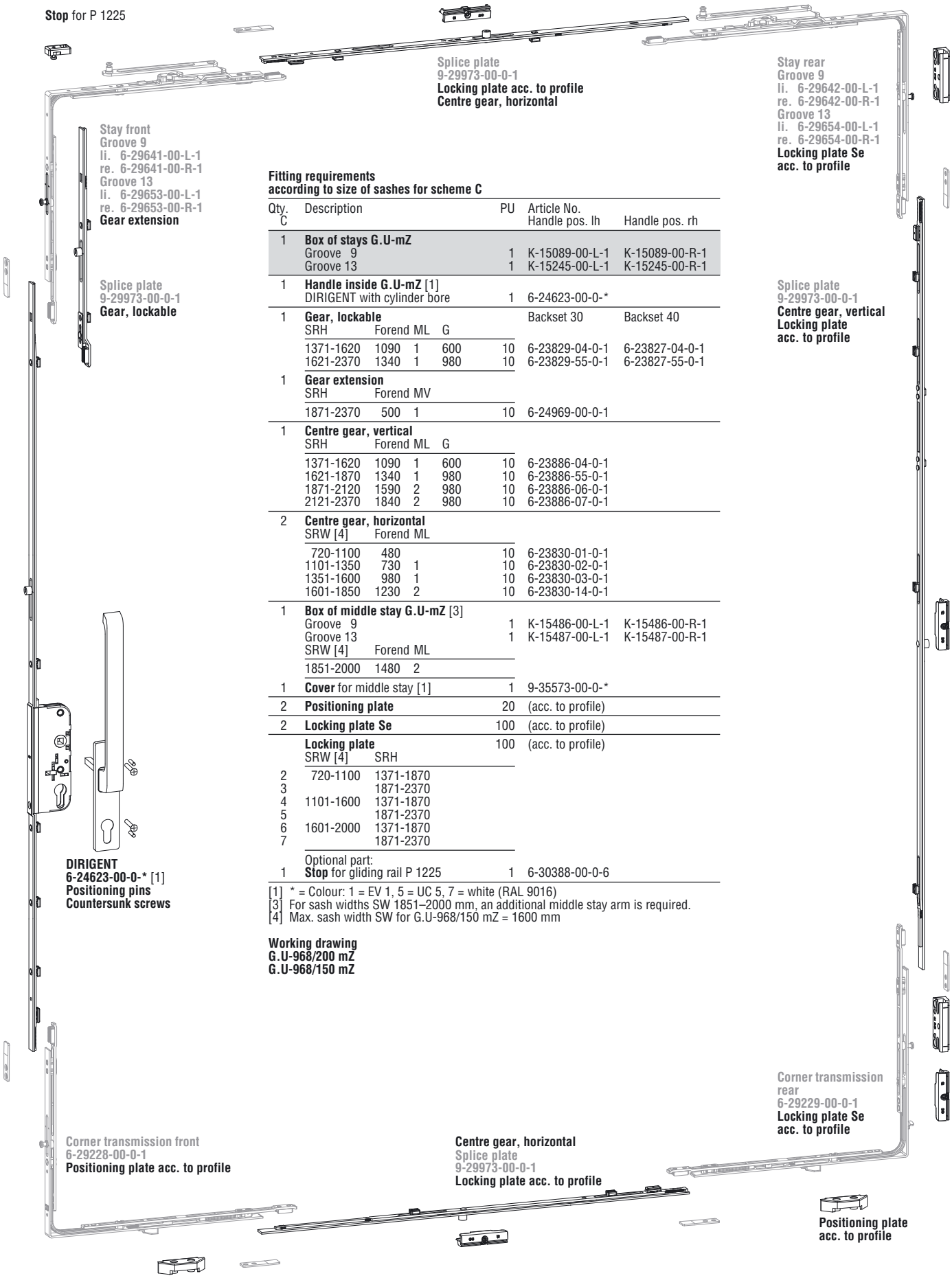

Fitting requirements
according to size of sashes for scheme C

Qty. C	Description				PU	Article No. Handle pos. lh	Handle pos. rh
1	**Box of stays G.U-mZ**						
	Groove 9				1	K-15089-00-L-1	K-15089-00-R-1
	Groove 13				1	K-15245-00-L-1	K-15245-00-R-1
1	**Handle inside G.U-mZ** [1]						
	DIRIGENT with cylinder bore				1	6-24623-00-0-*	
1	**Gear, lockable**					Backset 30	Backset 40
	SRH	Forend	ML	G			
	1371-1620	1090	1	600	10	6-23829-04-0-1	6-23827-04-0-1
	1621-2370	1340	1	980	10	6-23829-55-0-1	6-23827-55-0-1
1	**Gear extension**						
	SRH	Forend	MV				
	1871-2370	500	1		10	6-24969-00-0-1	
1	**Centre gear, vertical**						
	SRH	Forend	ML	G			
	1371-1620	1090	1	600	10	6-23886-04-0-1	
	1621-1870	1340	1	980	10	6-23886-55-0-1	
	1871-2120	1590	2	980	10	6-23886-06-0-1	
	2121-2370	1840	2	980	10	6-23886-07-0-1	
2	**Centre gear, horizontal**						
	SRW [4]	Forend	ML				
	720-1100	480			10	6-23830-01-0-1	
	1101-1350	730	1		10	6-23830-02-0-1	
	1351-1600	980	1		10	6-23830-03-0-1	
	1601-1850	1230	2		10	6-23830-14-0-1	
1	**Box of middle stay G.U-mZ** [3]						
	Groove 9				1	K-15486-00-L-1	K-15486-00-R-1
	Groove 13				1	K-15487-00-L-1	K-15487-00-R-1
	SRW [4]	Forend	ML				
	1851-2000	1480	2				
1	**Cover** for middle stay [1]				1	9-35573-00-0-*	
2	**Positioning plate**				20	(acc. to profile)	
2	**Locking plate Se**				100	(acc. to profile)	
	Locking plate				100	(acc. to profile)	
	SRW [4]	SRH					
2	720-1100	1371-1870					
3		1871-2370					
4	1101-1600	1371-1870					
5		1871-2370					
6	1601-2000	1371-1870					
7		1871-2370					
	Optional part:						
1	**Stop** for gliding rail P 1225				1	6-30388-00-0-6	

[1] * = Colour: 1 = EV 1, 5 = UC 5, 7 = white (RAL 9016)
[3] For sash widths SW 1851–2000 mm, an additional middle stay arm is required.
[4] Max. sash width SW for G.U-968/150 mZ = 1600 mm

Working drawing
G.U-968/200 mZ
G.U-968/150 mZ

with rebate shoot bolt, groove position 9 and 13

WK 2

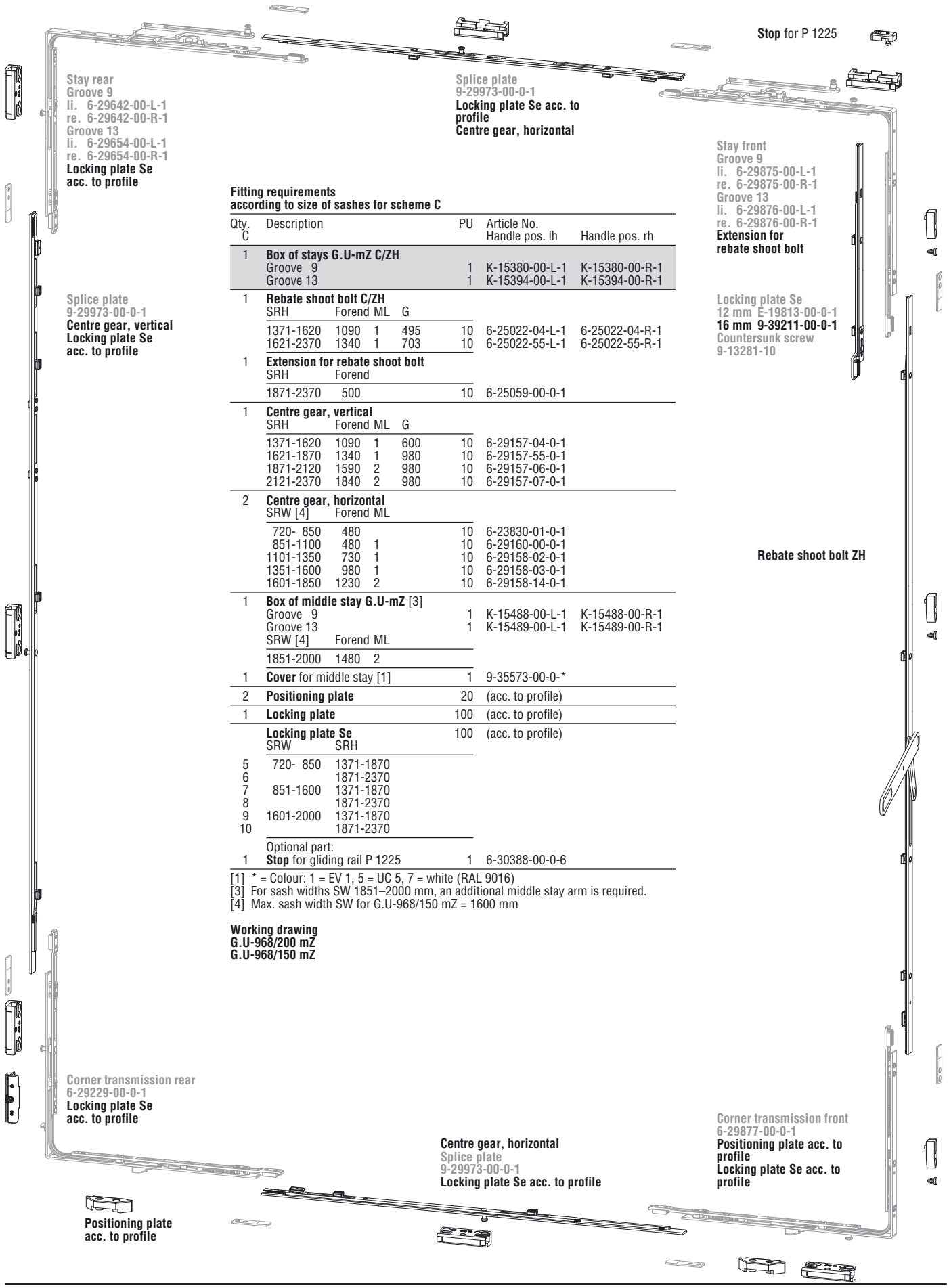

Fitting requirements
according to size of sashes for scheme C

Qty. C	Description				PU	Article No. Handle pos. lh	Handle pos. rh
1	**Box of stays G.U-mZ C/ZH**						
	Groove 9				1	K-15380-00-L-1	K-15380-00-R-1
	Groove 13				1	K-15394-00-L-1	K-15394-00-R-1
1	**Rebate shoot bolt C/ZH**						
	SRH	Forend	ML	G			
	1371-1620	1090	1	495	10	6-25022-04-L-1	6-25022-04-R-1
	1621-2370	1340	1	703	10	6-25022-55-L-1	6-25022-55-R-1
1	**Extension for rebate shoot bolt**						
	SRH	Forend					
	1871-2370	500			10	6-25059-00-0-1	
1	**Centre gear, vertical**						
	SRH	Forend	ML	G			
	1371-1620	1090	1	600	10	6-29157-04-0-1	
	1621-1870	1340	1	980	10	6-29157-55-0-1	
	1871-2120	1590	2	980	10	6-29157-06-0-1	
	2121-2370	1840	2	980	10	6-29157-07-0-1	
2	**Centre gear, horizontal**						
	SRW [4]	Forend	ML				
	720- 850	480			10	6-23830-01-0-1	
	851-1100	480	1		10	6-29160-00-0-1	
	1101-1350	730	1		10	6-29158-02-0-1	
	1351-1600	980	1		10	6-29158-03-0-1	
	1601-1850	1230	2		10	6-29158-14-0-1	
1	**Box of middle stay G.U-mZ** [3]						
	Groove 9				1	K-15488-00-L-1	K-15488-00-R-1
	Groove 13				1	K-15489-00-L-1	K-15489-00-R-1
	SRW [4]	Forend	ML				
	1851-2000	1480	2				
1	**Cover** for middle stay [1]				1	9-35573-00-0-*	
2	**Positioning plate**				20	(acc. to profile)	
1	**Locking plate**				100	(acc. to profile)	
	Locking plate Se				100	(acc. to profile)	
	SRW	SRH					
5	720- 850	1371-1870					
6		1871-2370					
7	851-1600	1371-1870					
8		1871-2370					
9	1601-2000	1371-1870					
10		1871-2370					
	Optional part:						
1	**Stop** for gliding rail P 1225				1	6-30388-00-0-6	

[1] * = Colour: 1 = EV 1, 5 = UC 5, 7 = white (RAL 9016)
[3] For sash widths SW 1851–2000 mm, an additional middle stay arm is required.
[4] Max. sash width SW for G.U-968/150 mZ = 1600 mm

Working drawing
G.U-968/200 mZ
G.U-968/150 mZ

with geared handle inside, groove position 9 and 13

WK 2

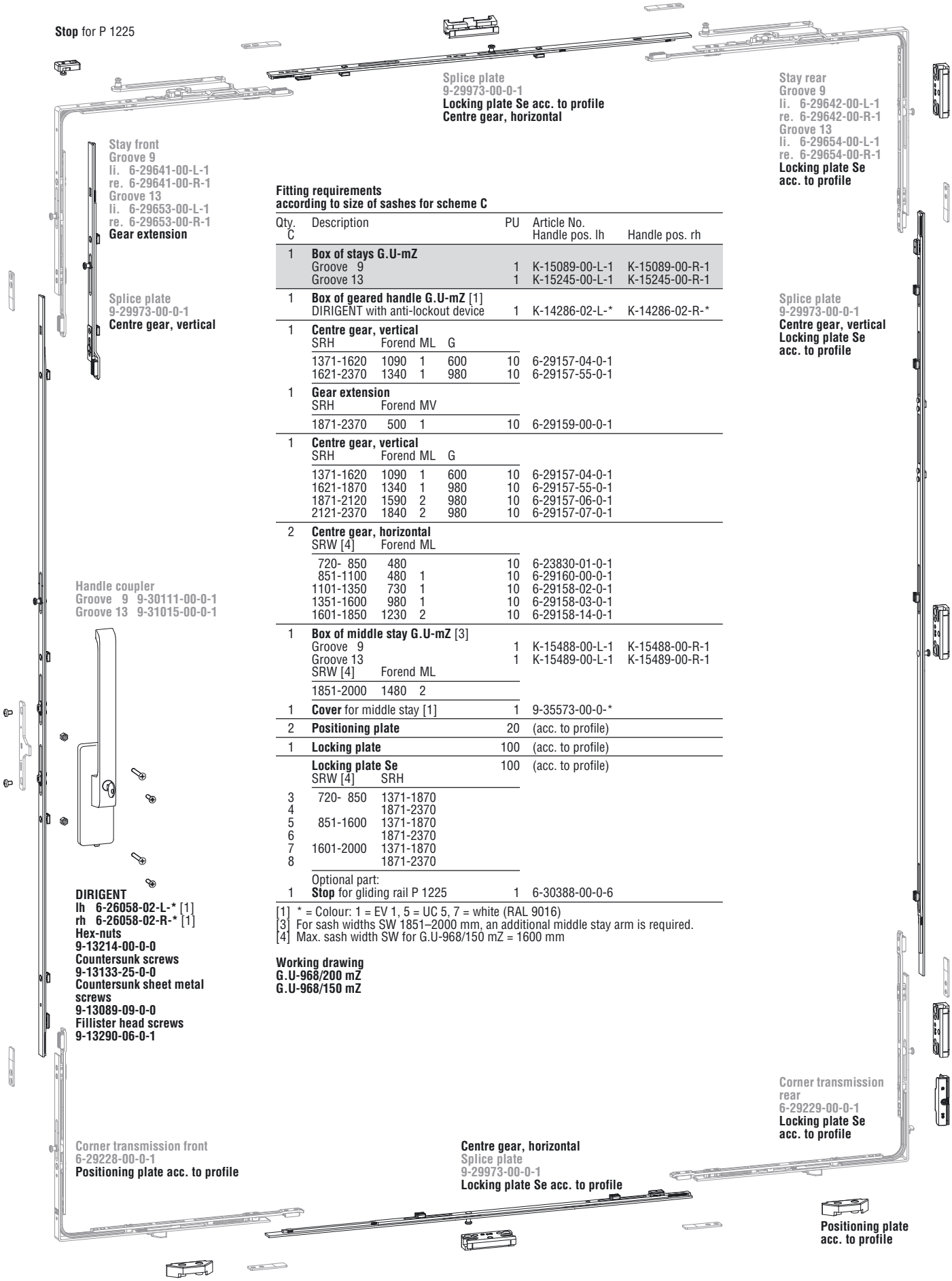

Fitting requirements according to size of sashes for scheme C

Qty. C	Description				PU	Article No. Handle pos. lh	Handle pos. rh
1	**Box of stays G.U-mZ**						
	Groove 9				1	K-15089-00-L-1	K-15089-00-R-1
	Groove 13				1	K-15245-00-L-1	K-15245-00-R-1
1	**Box of geared handle G.U-mZ** [1]						
	DIRIGENT with anti-lockout device				1	K-14286-02-L-*	K-14286-02-R-*
1	**Centre gear, vertical**						
	SRH	Forend	ML	G			
	1371-1620	1090	1	600	10	6-29157-04-0-1	
	1621-2370	1340	1	980	10	6-29157-55-0-1	
1	**Gear extension**						
	SRH	Forend	MV				
	1871-2370	500	1		10	6-29159-00-0-1	
1	**Centre gear, vertical**						
	SRH	Forend	ML	G			
	1371-1620	1090	1	600	10	6-29157-04-0-1	
	1621-1870	1340	1	980	10	6-29157-55-0-1	
	1871-2120	1590	2	980	10	6-29157-06-0-1	
	2121-2370	1840	2	980	10	6-29157-07-0-1	
2	**Centre gear, horizontal**						
	SRW [4]	Forend	ML				
	720- 850	480			10	6-23830-01-0-1	
	851-1100	480	1		10	6-29160-00-0-1	
	1101-1350	730	1		10	6-29158-02-0-1	
	1351-1600	980	1		10	6-29158-03-0-1	
	1601-1850	1230	2		10	6-29158-14-0-1	
1	**Box of middle stay G.U-mZ** [3]						
	Groove 9				1	K-15488-00-L-1	K-15488-00-R-1
	Groove 13				1	K-15489-00-L-1	K-15489-00-R-1
	SRW [4]	Forend	ML				
	1851-2000	1480	2				
1	**Cover** for middle stay [1]				1	9-35573-00-0-*	
2	**Positioning plate**				20	(acc. to profile)	
1	**Locking plate**				100	(acc. to profile)	
	Locking plate Se				100	(acc. to profile)	
	SRW [4]	SRH					
3	720- 850	1371-1870					
4		1871-2370					
5	851-1600	1371-1870					
6		1871-2370					
7	1601-2000	1371-1870					
8		1871-2370					
	Optional part:						
1	**Stop** for gliding rail P 1225				1	6-30388-00-0-6	

[1] * = Colour: 1 = EV 1, 5 = UC 5, 7 = white (RAL 9016)
[3] For sash widths SW 1851–2000 mm, an additional middle stay arm is required.
[4] Max. sash width SW for G.U-968/150 mZ = 1600 mm

Working drawing
G.U-968/200 mZ
G.U-968/150 mZ

with rebate shoot bolt, groove position 9 and 13

WK 2

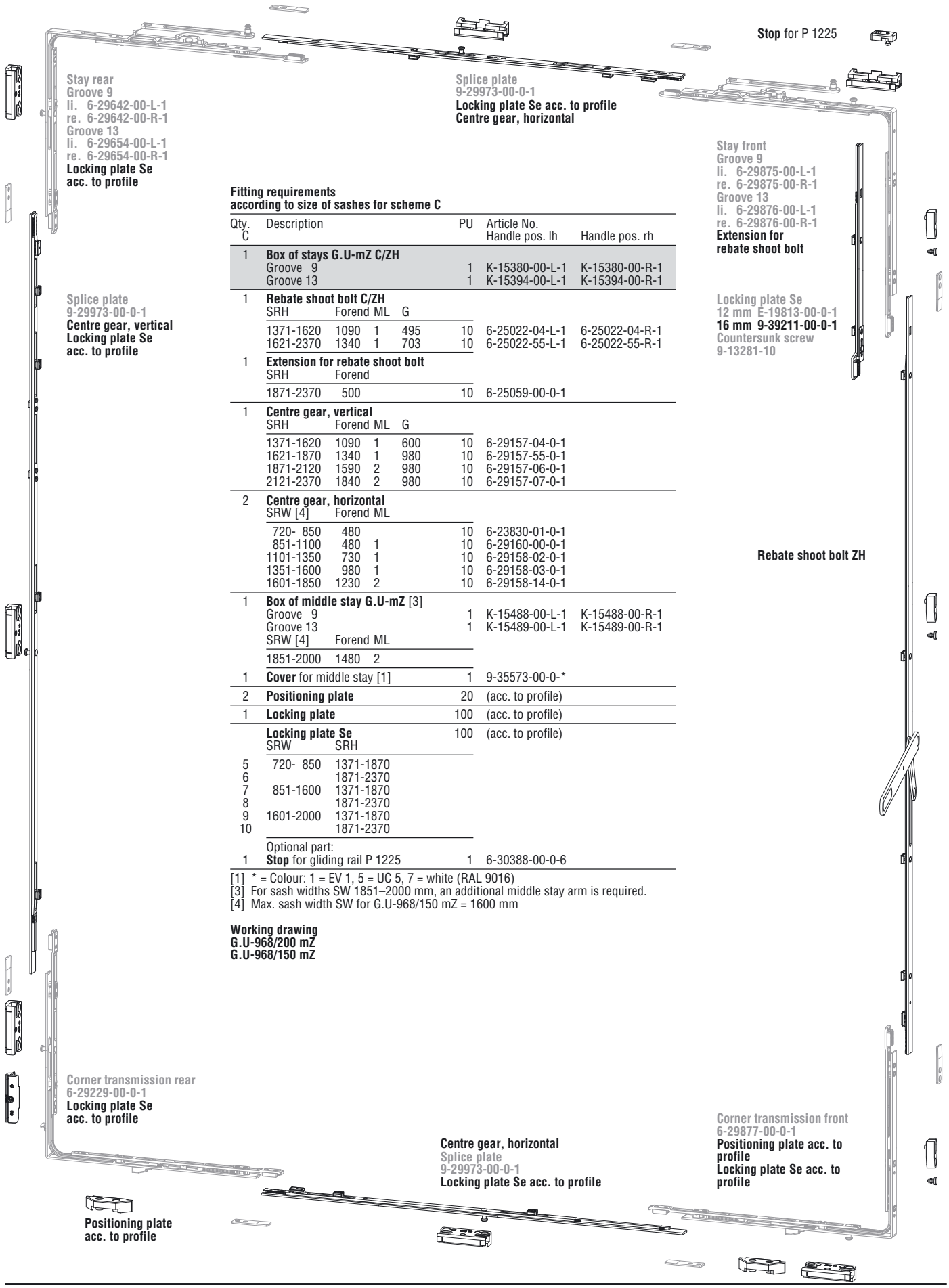

Fitting requirements
according to size of sashes for scheme C

Qty. C	Description				PU	Article No. Handle pos. lh	Handle pos. rh
1	**Box of stays G.U-mZ C/ZH**						
	Groove 9				1	K-15380-00-L-1	K-15380-00-R-1
	Groove 13				1	K-15394-00-L-1	K-15394-00-R-1
1	**Rebate shoot bolt C/ZH**						
	SRH	Forend	ML	G			
	1371-1620	1090	1	495	10	6-25022-04-L-1	6-25022-04-R-1
	1621-2370	1340	1	703	10	6-25022-55-L-1	6-25022-55-R-1
1	**Extension for rebate shoot bolt**						
	SRH	Forend					
	1871-2370	500			10	6-25059-00-0-1	
1	**Centre gear, vertical**						
	SRH	Forend	ML	G			
	1371-1620	1090	1	600	10	6-29157-04-0-1	
	1621-1870	1340	1	980	10	6-29157-55-0-1	
	1871-2120	1590	2	980	10	6-29157-06-0-1	
	2121-2370	1840	2	980	10	6-29157-07-0-1	
2	**Centre gear, horizontal**						
	SRW [4]	Forend	ML				
	720- 850	480			10	6-23830-01-0-1	
	851-1100	480	1		10	6-29160-00-0-1	
	1101-1350	730	1		10	6-29158-02-0-1	
	1351-1600	980	1		10	6-29158-03-0-1	
	1601-1850	1230	2		10	6-29158-14-0-1	
1	**Box of middle stay G.U-mZ** [3]						
	Groove 9				1	K-15488-00-L-1	K-15488-00-R-1
	Groove 13				1	K-15489-00-L-1	K-15489-00-R-1
	SRW [4]	Forend	ML				
	1851-2000	1480	2				
1	**Cover** for middle stay [1]				1	9-35573-00-0-*	
2	**Positioning plate**				20	(acc. to profile)	
1	**Locking plate**				100	(acc. to profile)	
	Locking plate Se				100	(acc. to profile)	
	SRW	SRH					
5	720- 850	1371-1870					
6		1871-2370					
7	851-1600	1371-1870					
8		1871-2370					
9	1601-2000	1371-1870					
10		1871-2370					
	Optional part:						
1	**Stop** for gliding rail P 1225				1	6-30388-00-0-6	

[1] * = Colour: 1 = EV 1, 5 = UC 5, 7 = white (RAL 9016)
[3] For sash widths SW 1851–2000 mm, an additional middle stay arm is required.
[4] Max. sash width SW for G.U-968/150 mZ = 1600 mm

Working drawing
G.U-968/200 mZ
G.U-968/150 mZ

with lockable gear, groove position 9 and 13

WK 2

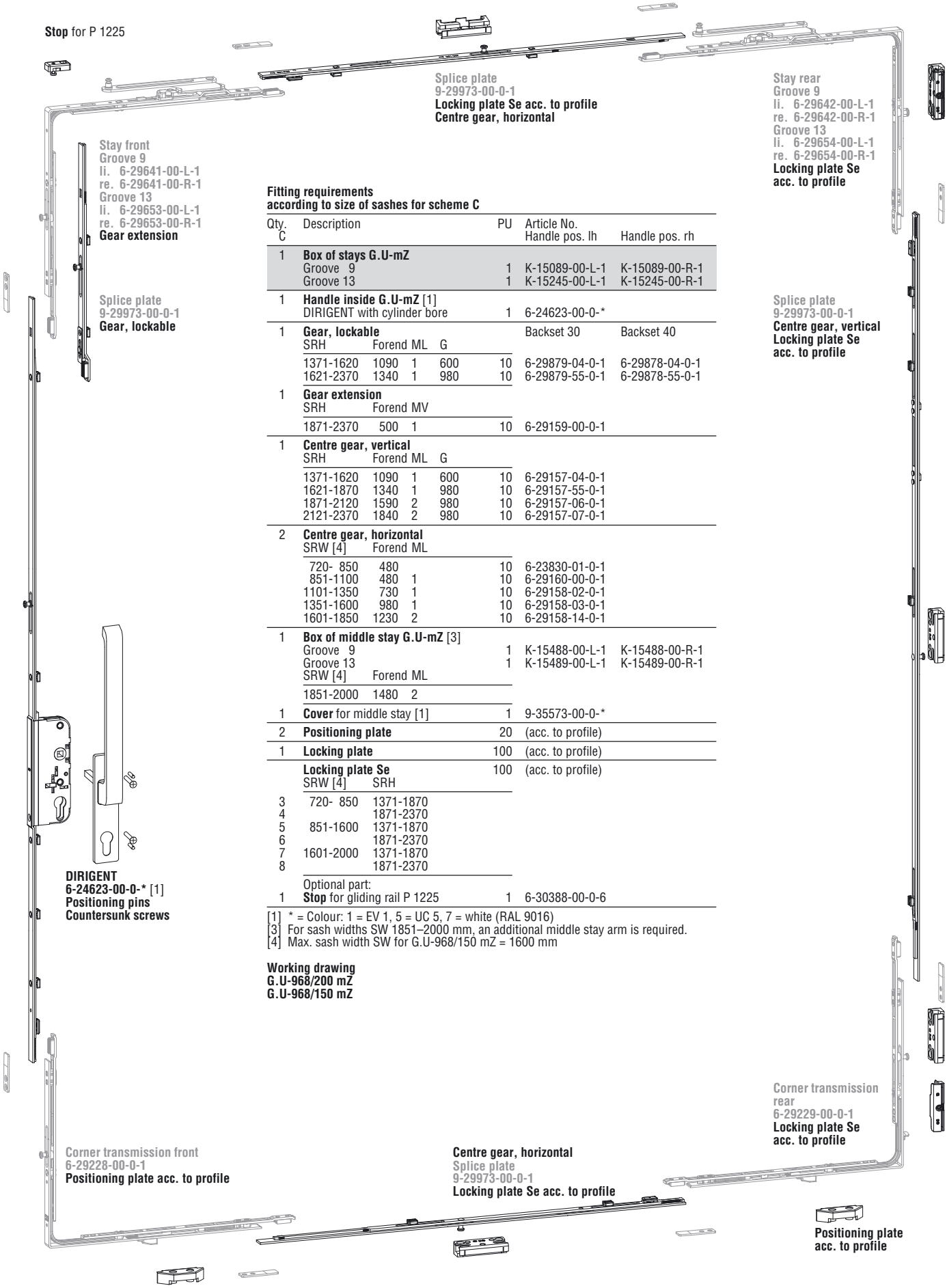

Fitting requirements
according to size of sashes for scheme C

Qty. C	Description				PU	Article No. Handle pos. lh	Handle pos. rh
1	**Box of stays G.U-mZ**						
	Groove 9				1	K-15089-00-L-1	K-15089-00-R-1
	Groove 13				1	K-15245-00-L-1	K-15245-00-R-1
1	**Handle inside G.U-mZ** [1]						
	DIRIGENT with cylinder bore				1	6-24623-00-0-*	
1	**Gear, lockable**					Backset 30	Backset 40
	SRH	Forend	ML	G			
	1371-1620	1090	1	600	10	6-29879-04-0-1	6-29878-04-0-1
	1621-2370	1340	1	980	10	6-29879-55-0-1	6-29878-55-0-1
1	**Gear extension**						
	SRH	Forend	MV				
	1871-2370	500	1		10	6-29159-00-0-1	
1	**Centre gear, vertical**						
	SRH	Forend	ML	G			
	1371-1620	1090	1	600	10	6-29157-04-0-1	
	1621-1870	1340	1	980	10	6-29157-55-0-1	
	1871-2120	1590	2	980	10	6-29157-06-0-1	
	2121-2370	1840	2	980	10	6-29157-07-0-1	
2	**Centre gear, horizontal**						
	SRW [4]	Forend	ML				
	720- 850	480			10	6-23830-01-0-1	
	851-1100	480	1		10	6-29160-00-0-1	
	1101-1350	730	1		10	6-29158-02-0-1	
	1351-1600	980	1		10	6-29158-03-0-1	
	1601-1850	1230	2		10	6-29158-14-0-1	
1	**Box of middle stay G.U-mZ** [3]						
	Groove 9				1	K-15488-00-L-1	K-15488-00-R-1
	Groove 13				1	K-15489-00-L-1	K-15489-00-R-1
	SRW [4]	Forend	ML				
	1851-2000	1480	2				
1	**Cover** for middle stay [1]				1	9-35573-00-0-*	
2	**Positioning plate**				20	(acc. to profile)	
1	**Locking plate**				100	(acc. to profile)	
	Locking plate Se				100	(acc. to profile)	
	SRW [4]	SRH					
3	720- 850	1371-1870					
4		1871-2370					
5	851-1600	1371-1870					
6		1871-2370					
7	1601-2000	1371-1870					
8		1871-2370					
	Optional part:						
1	**Stop** for gliding rail P 1225				1	6-30388-00-0-6	

[1] * = Colour: 1 = EV 1, 5 = UC 5, 7 = white (RAL 9016)
[3] For sash widths SW 1851–2000 mm, an additional middle stay arm is required.
[4] Max. sash width SW for G.U-968/150 mZ = 1600 mm

Working drawing
G.U-968/200 mZ
G.U-968/150 mZ

Handle inside – gear 15, groove position 9 and 13

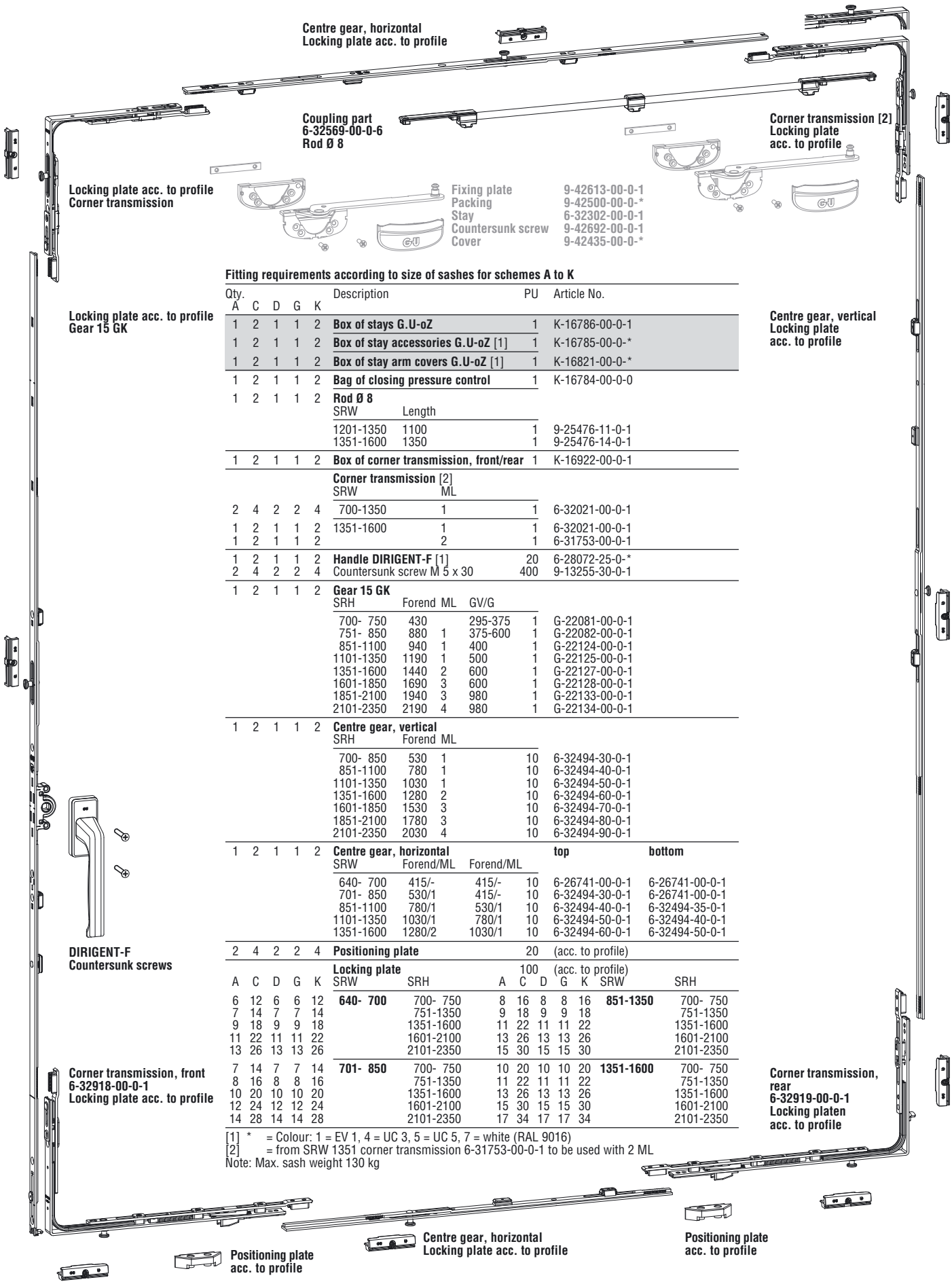

Fitting requirements according to size of sashes for schemes A to K

Qty. A	C	D	G	K	Description				PU	Article No.	
1	2	1	1	2	**Box of stays G.U-oZ**				1	K-16786-00-0-1	
1	2	1	1	2	**Box of stay accessories G.U-oZ** [1]				1	K-16785-00-0-*	
1	2	1	1	2	**Box of stay arm covers G.U-oZ** [1]				1	K-16821-00-0-*	
1	2	1	1	2	**Bag of closing pressure control**				1	K-16784-00-0-0	
1	2	1	1	2	**Rod Ø 8**						
					SRW	Length					
					1201-1350	1100			1	9-25476-11-0-1	
					1351-1600	1350			1	9-25476-14-0-1	
1	2	1	1	2	**Box of corner transmission, front/rear**				1	K-16922-00-0-1	
					Corner transmission [2]						
					SRW	ML					
2	4	2	2	4	700-1350	1			1	6-32021-00-0-1	
1	2	1	1	2	1351-1600	1			1	6-32021-00-0-1	
1	2	1	1	2		2			1	6-31753-00-0-1	
1	2	1	1	2	**Handle DIRIGENT-F** [1]				20	6-28072-25-0-*	
2	4	2	2	4	Countersunk screw M 5 x 30				400	9-13255-30-0-1	
1	2	1	1	2	**Gear 15 GK**						
					SRH	Forend	ML	GV/G			
					700- 750	430		295-375	1	G-22081-00-0-1	
					751- 850	880	1	375-600	1	G-22082-00-0-1	
					851-1100	940	1	400	1	G-22124-00-0-1	
					1101-1350	1190	1	500	1	G-22125-00-0-1	
					1351-1600	1440	2	600	1	G-22127-00-0-1	
					1601-1850	1690	3	600	1	G-22128-00-0-1	
					1851-2100	1940	3	980	1	G-22133-00-0-1	
					2101-2350	2190	4	980	1	G-22134-00-0-1	
1	2	1	1	2	**Centre gear, vertical**						
					SRH	Forend	ML				
					700- 850	530	1		10	6-32494-30-0-1	
					851-1100	780	1		10	6-32494-40-0-1	
					1101-1350	1030	1		10	6-32494-50-0-1	
					1351-1600	1280	2		10	6-32494-60-0-1	
					1601-1850	1530	3		10	6-32494-70-0-1	
					1851-2100	1780	3		10	6-32494-80-0-1	
					2101-2350	2030	4		10	6-32494-90-0-1	
1	2	1	1	2	**Centre gear, horizontal**					**top**	**bottom**
					SRW	Forend/ML		Forend/ML			
					640- 700	415/-		415/-	10	6-26741-00-0-1	6-26741-00-0-1
					701- 850	530/1		415/-	10	6-32494-30-0-1	6-26741-00-0-1
					851-1100	780/1		530/1	10	6-32494-40-0-1	6-32494-35-0-1
					1101-1350	1030/1		780/1	10	6-32494-50-0-1	6-32494-40-0-1
					1351-1600	1280/2		1030/1	10	6-32494-60-0-1	6-32494-50-0-1
2	4	2	2	4	**Positioning plate**				20	(acc. to profile)	
					Locking plate				100	(acc. to profile)	

A	C	D	G	K	SRW	SRH	A	C	D	G	K	SRW	SRH
6	12	6	6	12	**640- 700**	700- 750	8	16	8	8	16	**851-1350**	700- 750
7	14	7	7	14		751-1350	9	18	9	9	18		751-1350
9	18	9	9	18		1351-1600	11	22	11	11	22		1351-1600
11	22	11	11	22		1601-2100	13	26	13	13	26		1601-2100
13	26	13	13	26		2101-2350	15	30	15	15	30		2101-2350
7	14	7	7	14	**701- 850**	700- 750	10	20	10	10	20	**1351-1600**	700- 750
8	16	8	8	16		751-1350	11	22	11	11	22		751-1350
10	20	10	10	20		1351-1600	13	26	13	13	26		1351-1600
12	24	12	12	24		1601-2100	15	30	15	15	30		1601-2100
14	28	14	14	28		2101-2350	17	34	17	17	34		2101-2350

[1] * = Colour: 1 = EV 1, 4 = UC 3, 5 = UC 5, 7 = white (RAL 9016)
[2] = from SRW 1351 corner transmission 6-31753-00-0-1 to be used with 2 ML
Note: Max. sash weight 130 kg

Handle inside – lockable gear AP, groove position 9 and 13

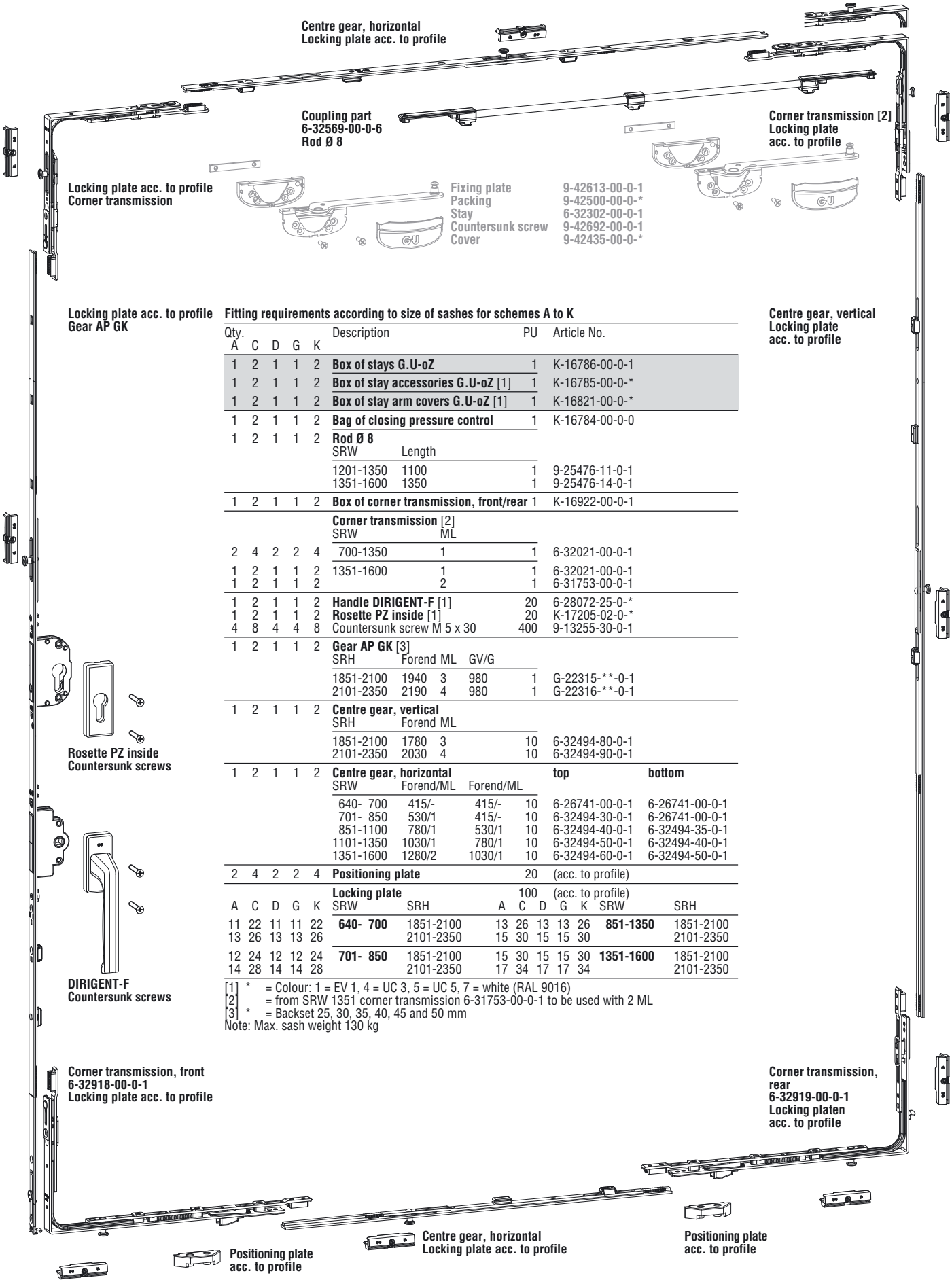

Fitting requirements according to size of sashes for schemes A to K

Qty. A	C	D	G	K	Description				PU	Article No.	
1	2	1	1	2	**Box of stays G.U-oZ**				1	K-16786-00-0-1	
1	2	1	1	2	**Box of stay accessories G.U-oZ** [1]				1	K-16785-00-0-*	
1	2	1	1	2	**Box of stay arm covers G.U-oZ** [1]				1	K-16821-00-0-*	
1	2	1	1	2	**Bag of closing pressure control**				1	K-16784-00-0-0	
1	2	1	1	2	**Rod Ø 8**						
					SRW	Length					
					1201-1350	1100			1	9-25476-11-0-1	
					1351-1600	1350			1	9-25476-14-0-1	
1	2	1	1	2	**Box of corner transmission, front/rear**				1	K-16922-00-0-1	
					Corner transmission [2]						
					SRW	ML					
2	4	2	2	4	700-1350	1			1	6-32021-00-0-1	
1	2	1	1	2	1351-1600	1			1	6-32021-00-0-1	
1	2	1	1	2		2			1	6-31753-00-0-1	
1	2	1	1	2	**Handle DIRIGENT-F** [1]				20	6-28072-25-0-*	
1	2	1	1	2	**Rosette PZ inside** [1]				20	K-17205-02-0-*	
4	8	4	4	8	Countersunk screw M 5 x 30				400	9-13255-30-0-1	
1	2	1	1	2	**Gear AP GK** [3]						
					SRH	Forend	ML	GV/G			
					1851-2100	1940	3	980	1	G-22315-**-0-1	
					2101-2350	2190	4	980	1	G-22316-**-0-1	
1	2	1	1	2	**Centre gear, vertical**						
					SRH	Forend	ML				
					1851-2100	1780	3		10	6-32494-80-0-1	
					2101-2350	2030	4		10	6-32494-90-0-1	
1	2	1	1	2	**Centre gear, horizontal**					**top**	**bottom**
					SRW	Forend/ML	Forend/ML				
					640- 700	415/-	415/-		10	6-26741-00-0-1	6-26741-00-0-1
					701- 850	530/1	415/-		10	6-32494-30-0-1	6-26741-00-0-1
					851-1100	780/1	530/1		10	6-32494-40-0-1	6-32494-35-0-1
					1101-1350	1030/1	780/1		10	6-32494-50-0-1	6-32494-40-0-1
					1351-1600	1280/2	1030/1		10	6-32494-60-0-1	6-32494-50-0-1
2	4	2	2	4	**Positioning plate**				20	(acc. to profile)	
					Locking plate				100	(acc. to profile)	

A	C	D	G	K	SRW	SRH	A	C	D	G	K	SRW	SRH
11	22	11	11	22	**640- 700**	1851-2100	13	26	13	13	26	**851-1350**	1851-2100
13	26	13	13	26		2101-2350	15	30	15	15	30		2101-2350
12	24	12	12	24	**701- 850**	1851-2100	15	30	15	15	30	**1351-1600**	1851-2100
14	28	14	14	28		2101-2350	17	34	17	17	34		2101-2350

[1] * = Colour: 1 = EV 1, 4 = UC 3, 5 = UC 5, 7 = white (RAL 9016)
[2] = from SRW 1351 corner transmission 6-31753-00-0-1 to be used with 2 ML
[3] * = Backset 25, 30, 35, 40, 45 and 50 mm
Note: Max. sash weight 130 kg

Handle inside – gear 15, groove position 9 and 13

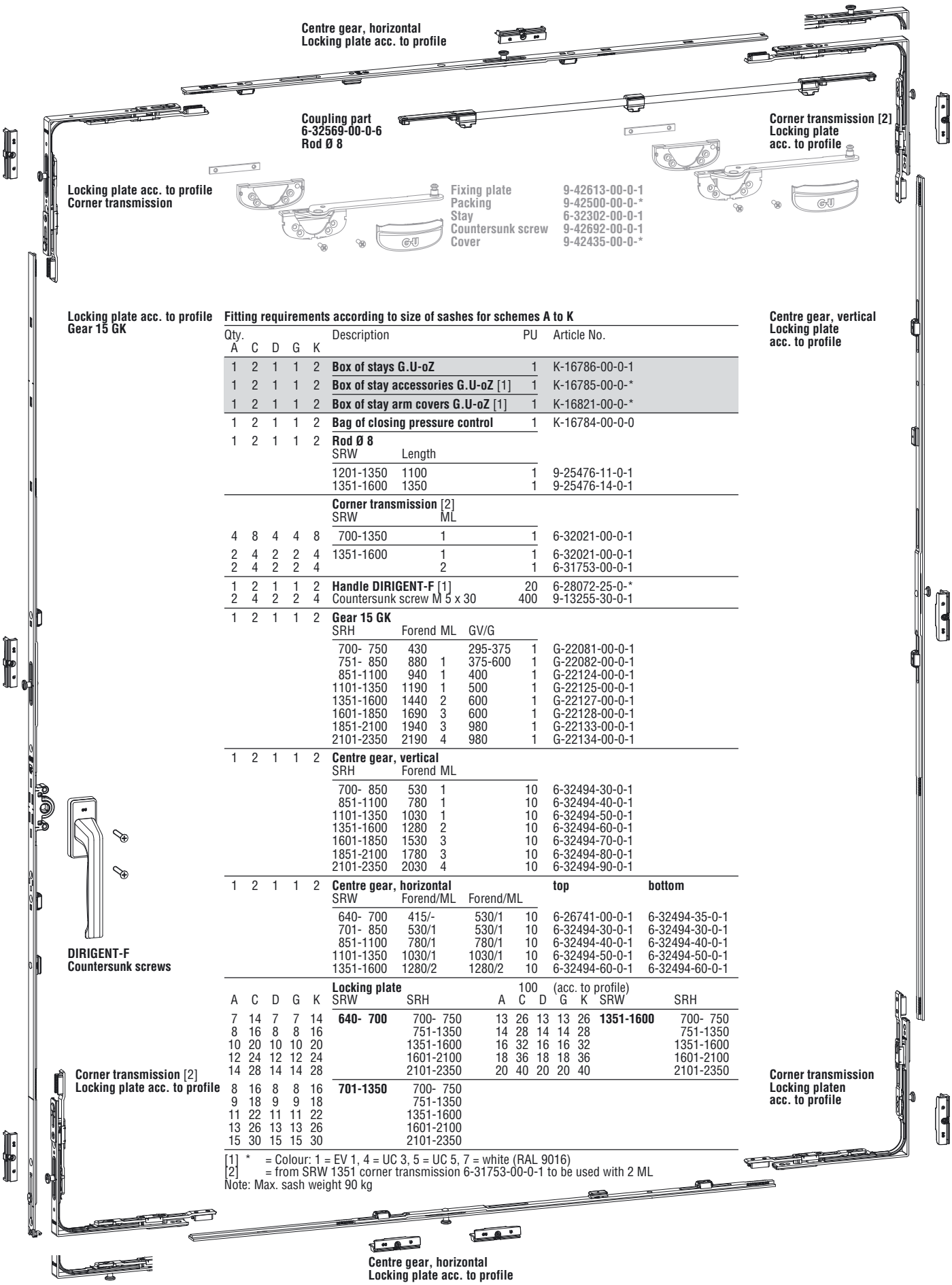

Fitting requirements according to size of sashes for schemes A to K

Qty. A	C	D	G	K	Description				PU	Article No.	
1	2	1	1	2	**Box of stays G.U-oZ**				1	K-16786-00-0-1	
1	2	1	1	2	**Box of stay accessories G.U-oZ** [1]				1	K-16785-00-0-*	
1	2	1	1	2	**Box of stay arm covers G.U-oZ** [1]				1	K-16821-00-0-*	
1	2	1	1	2	**Bag of closing pressure control**				1	K-16784-00-0-0	
1	2	1	1	2	**Rod Ø 8**						
					SRW	Length					
					1201-1350	1100			1	9-25476-11-0-1	
					1351-1600	1350			1	9-25476-14-0-1	
					Corner transmission [2]						
					SRW	ML					
4	8	4	4	8	700-1350	1			1	6-32021-00-0-1	
2	4	2	2	4	1351-1600	1			1	6-32021-00-0-1	
2	4	2	2	4		2			1	6-31753-00-0-1	
1	2	1	1	2	**Handle DIRIGENT-F** [1]				20	6-28072-25-0-*	
2	4	2	2	4	Countersunk screw M 5 x 30				400	9-13255-30-0-1	
1	2	1	1	2	**Gear 15 GK**						
					SRH	Forend	ML	GV/G			
					700- 750	430		295-375	1	G-22081-00-0-1	
					751- 850	880	1	375-600	1	G-22082-00-0-1	
					851-1100	940	1	400	1	G-22124-00-0-1	
					1101-1350	1190	1	500	1	G-22125-00-0-1	
					1351-1600	1440	2	600	1	G-22127-00-0-1	
					1601-1850	1690	3	600	1	G-22128-00-0-1	
					1851-2100	1940	3	980	1	G-22133-00-0-1	
					2101-2350	2190	4	980	1	G-22134-00-0-1	
1	2	1	1	2	**Centre gear, vertical**						
					SRH	Forend	ML				
					700- 850	530	1		10	6-32494-30-0-1	
					851-1100	780	1		10	6-32494-40-0-1	
					1101-1350	1030	1		10	6-32494-50-0-1	
					1351-1600	1280	2		10	6-32494-60-0-1	
					1601-1850	1530	3		10	6-32494-70-0-1	
					1851-2100	1780	3		10	6-32494-80-0-1	
					2101-2350	2030	4		10	6-32494-90-0-1	
1	2	1	1	2	**Centre gear, horizontal**					**top**	**bottom**
					SRW	Forend/ML		Forend/ML			
					640- 700	415/-		530/1	10	6-26741-00-0-1	6-32494-35-0-1
					701- 850	530/1		530/1	10	6-32494-30-0-1	6-32494-30-0-1
					851-1100	780/1		780/1	10	6-32494-40-0-1	6-32494-40-0-1
					1101-1350	1030/1		1030/1	10	6-32494-50-0-1	6-32494-50-0-1
					1351-1600	1280/2		1280/2	10	6-32494-60-0-1	6-32494-60-0-1

Locking plate 100 (acc. to profile)

A	C	D	G	K	SRW	SRH	A	C	D	G	K	SRW	SRH
7	14	7	7	14	**640- 700**	700- 750	13	26	13	13	26	**1351-1600**	700- 750
8	16	8	8	16		751-1350	14	28	14	14	28		751-1350
10	20	10	10	20		1351-1600	16	32	16	16	32		1351-1600
12	24	12	12	24		1601-2100	18	36	18	18	36		1601-2100
14	28	14	14	28		2101-2350	20	40	20	20	40		2101-2350
8	16	8	8	16	**701-1350**	700- 750							
9	18	9	9	18		751-1350							
11	22	11	11	22		1351-1600							
13	26	13	13	26		1601-2100							
15	30	15	15	30		2101-2350							

[1] * = Colour: 1 = EV 1, 4 = UC 3, 5 = UC 5, 7 = white (RAL 9016)
[2] = from SRW 1351 corner transmission 6-31753-00-0-1 to be used with 2 ML
Note: Max. sash weight 90 kg

Handle inside – lockable gear AP, groove position 9 and 13

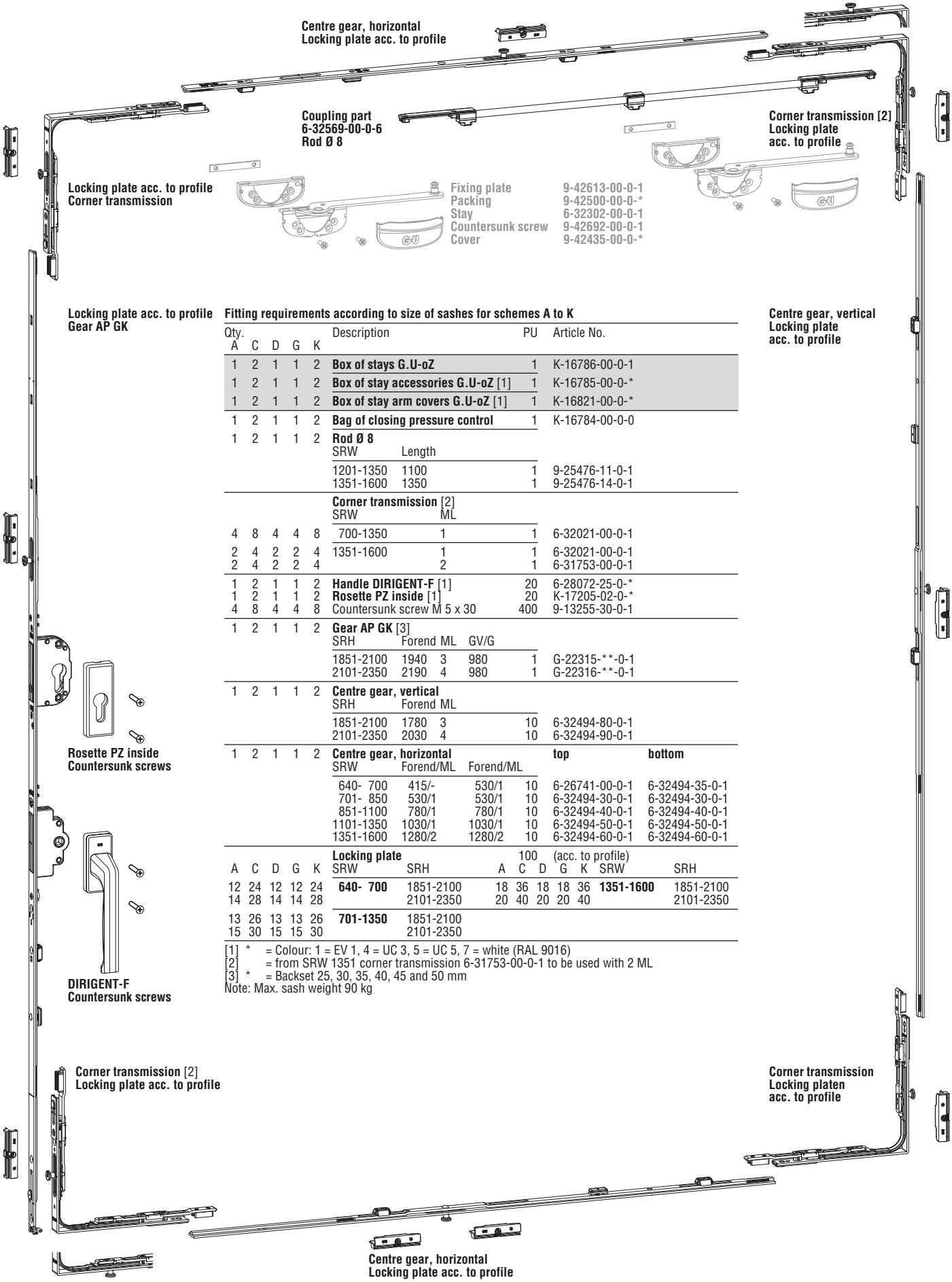

Fitting requirements according to size of sashes for schemes A to K

Qty. A	C	D	G	K	Description				PU	Article No.	
1	2	1	1	2	**Box of stays G.U-oZ**				1	K-16786-00-0-1	
1	2	1	1	2	**Box of stay accessories G.U-oZ** [1]				1	K-16785-00-0-*	
1	2	1	1	2	**Box of stay arm covers G.U-oZ** [1]				1	K-16821-00-0-*	
1	2	1	1	2	**Bag of closing pressure control**				1	K-16784-00-0-0	
1	2	1	1	2	**Rod Ø 8**						
					SRW	Length					
					1201-1350	1100			1	9-25476-11-0-1	
					1351-1600	1350			1	9-25476-14-0-1	
					Corner transmission [2]						
					SRW	ML					
4	8	4	4	8	700-1350	1			1	6-32021-00-0-1	
2	4	2	2	4	1351-1600	1			1	6-32021-00-0-1	
2	4	2	2	4		2			1	6-31753-00-0-1	
1	2	1	1	2	**Handle DIRIGENT-F** [1]				20	6-28072-25-0-*	
1	2	1	1	2	**Rosette PZ inside** [1]				20	K-17205-02-0-*	
4	8	4	4	8	Countersunk screw M 5 x 30				400	9-13255-30-0-1	
1	2	1	1	2	**Gear AP GK** [3]						
					SRH	Forend	ML	GV/G			
					1851-2100	1940	3	980	1	G-22315-**-0-1	
					2101-2350	2190	4	980	1	G-22316-**-0-1	
1	2	1	1	2	**Centre gear, vertical**						
					SRH	Forend	ML				
					1851-2100	1780	3		10	6-32494-80-0-1	
					2101-2350	2030	4		10	6-32494-90-0-1	
1	2	1	1	2	**Centre gear, horizontal**					**top**	**bottom**
					SRW	Forend/ML	Forend/ML				
					640- 700	415/-	530/1		10	6-26741-00-0-1	6-32494-35-0-1
					701- 850	530/1	530/1		10	6-32494-30-0-1	6-32494-30-0-1
					851-1100	780/1	780/1		10	6-32494-40-0-1	6-32494-40-0-1
					1101-1350	1030/1	1030/1		10	6-32494-50-0-1	6-32494-50-0-1
					1351-1600	1280/2	1280/2		10	6-32494-60-0-1	6-32494-60-0-1

Locking plate 100 (acc. to profile)

A	C	D	G	K	SRW	SRH	A	C	D	G	K	SRW	SRH
12	24	12	12	24	**640- 700**	1851-2100	18	36	18	18	36	**1351-1600**	1851-2100
14	28	14	14	28		2101-2350	20	40	20	20	40		2101-2350
13	26	13	13	26	**701-1350**	1851-2100							
15	30	15	15	30		2101-2350							

[1] * = Colour: 1 = EV 1, 4 = UC 3, 5 = UC 5, 7 = white (RAL 9016)
[2] = from SRW 1351 corner transmission 6-31753-00-0-1 to be used with 2 ML
[3] * = Backset 25, 30, 35, 40, 45 and 50 mm
Note: Max. sash weight 90 kg

Doors and windows with sash width SW up to 2000 mm and sash weight up to 200 kg – fitting groove 16 mm

End cap 9-34523-00-0-*
Gliding rail P 1225
Cover rail P 1480

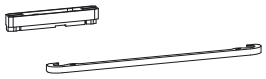

Stay arm glider 6-22755-00-0-0
Stay arm cover 9-35573-00-0-*

Gliding rail P 1225
End cap 9-34523-00-0-*
Cover rail P 1480

Fitting requirements according to size of sashes for schemes A to K

Quantity A	C	D	G	K	Description [2]	PU	Article No. Handle pos. lh	Handle pos. rh
1	2•	1	1	2•	**Box of runners G.U-968/200** Contents	1	K-15268-00-L-0	K-15268-00-R-0
					1 Runner, front 1 Runner, rear			
		1			**Positioning pin D** for control part	1	9-39897-00-0-1	
1	2	1	1	2	**Bag of profiles G.U-968/200** [1] Contents			
					1 Rod Ø 10 mm 1 Gliding rail P 1225 1 Running rail P 1213 1 Cover rail P 1480 1 Cover rail P 1603 1 Box of accessories			
					SW			
					740- 850	1	K-15269-20-0-*	
					851-1100	1	K-15269-25-0-*	
					1101-1350	1	K-15269-30-0-*	
					1351-1600	1	K-15269-35-0-*	
					1601-1850	1	K-15269-40-0-*	
					1851-2000	1	K-15269-45-0-*	

[1] * = Colour: 1 = EV 1, 5 = UC 5, 7 = white (RAL 9016)
[2] • = 1 box for handle pos. lh, 1 box for handle pos. rh

Note for G.U-968/200 mZ:
For sashes with heavy glazing, tandem runners are required.

Working drawings
G.U-968/200 mZ 0-44709
G.U-968/200 mZ Scheme C 0-43861

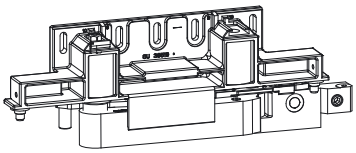

Runner, front lh 6-32332-00-L-0
rh 6-32332-00-R-0

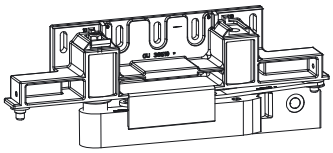

Runner, rear lh 6-29557-00-L-0
rh 6-29557-00-R-0

Cover rail P 1603

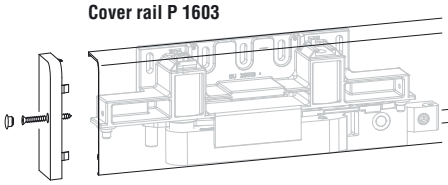

Cover 9-26687-00-0-*
Countersunk screw 9-13151-38-0-0
End cap 9-38520-00-L-*

Support
9-38527-00-0-0

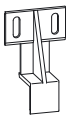

Rod Ø 10 mm
Guide 6-29750-00-0-1

Cover rail P 1603

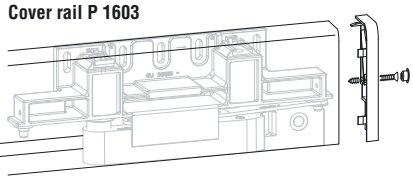

End cap 9-38520-00-R-*
Countersunk screw 9-13151-38-0-0
Cover 9-26687-00-0-*

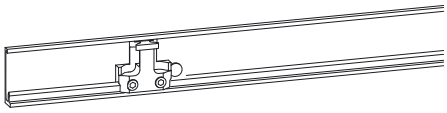

Running rail P 1213
Control part 6-33328-00-0-*
Positioning pin D for control part

Running rail P 1213
Spring-loaded buffer 6-29564-00-0-*

Doors and windows with sash width SW up to 1600 mm and sash weight up to 150 kg – fitting groove 16 mm

End cap 9-34523-00-0-*
Gliding rail P 1225
Cover rail P 1480

Stay arm glider 6-22755-00-0-0
Stay arm cover 9-35573-00-0-*

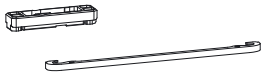

Gliding rail P 1225
End cap 9-34523-00-0-*
Cover rail P 1480

Fitting requirements according to size of sashes for schemes A to K

Quantity A	C	D	G	K	Description [2]	PU	Article No. Handle pos. lh	Handle pos. rh
1	2•	1	1	2•	**Box of runners G.U-968/150** Contents	1	K-15278-00-L-0	K-15278-00-R-0
					1 Runner, front 1 Runner, rear			
		1			**Positioning pin D** for control part	1	9-39897-00-0-1	
1	2	1	1	2	**Bag of profiles G.U-968/150** [1] Contents			
					1 Rod Ø 8 mm 1 Gliding rail P 1225 1 Running rail P 1300 1 Cover rail P 1480 1 Cover rail P 1608 1 Box of accessories			
					SW			
					600- 850	1	K-15279-20-0-*	
					851-1100	1	K-15279-25-0-*	
					1101-1350	1	K-15279-30-0-*	
					1351-1600	1	K-15279-35-0-*	

[1] * = Colour: 1 = EV 1, 5 = UC 5, 7 = white (RAL 9016)
[2] • = 1 box for handle pos. lh, 1 box for handle pos. rh

Working drawings
G.U-968/150 mZ 0-43905
G.U-968/150 mZ Scheme C 0-43861
G.U-968/150 oZ 0-44495

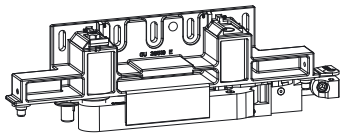

Runner, front lh 6-32545-00-L-0
rh 6-32545-00-R-0

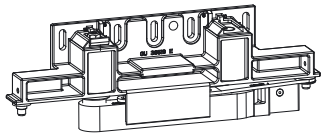

Runner, rear lh 6-29561-00-L-0
rh 6-29561-00-R-0

Cover rail P 1608

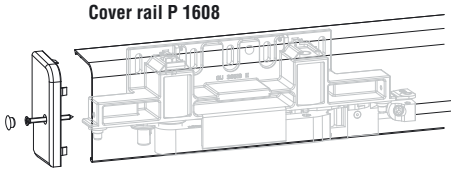

Cover 9-26687-00-0-*
Countersunk screw 9-13151-38-0-0
End cap 9-38543-00-L-*

Support
9-38527-00-0-0

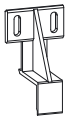

Rod Ø 8 mm
Guide 6-24764-00-0-1

Cover rail P 1608

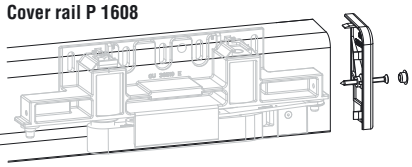

End cap 9-38543-00-R-*
Countersunk screw 9-13151-38-0-0
Cover 9-26687-00-0-*

Running rail P 1300
Control part 6-33329-00-0-*
Positioning pin D for control part

Running rail P 1300
Spring-loaded buffer 6-29565-00-0-*

Doors and windows with sash width SW up to 1600 mm and sash weight up to 90 kg – fitting groove 16 mm

End cap 9-34523-00-0-*
Gliding rail P 1225
Cover rail P 1480

Stay arm glider 6-22755-00-0-0

Gliding rail P 1225
End cap 9-34523-00-0-*
Cover rail P 1480

Fitting requirements according to size of sashes for schemes A to K

Quantity A	C	D	G	K	Description [2]	PU	Article No. Handle pos. lh	Handle pos. rh
1	2•	1	1	2•	**Box of runners G.U-90**	1	K-16656-00-L-0	K-16656-00-R-0
					Contents			
					1 Runner, front 1 Runner, rear			
1	2	1	1	2	**Bag of packings G.U-90**	1	K-16657-00-0-6	
					Contents			
					2 Packings runner 2 Adapter sleeves for end caps 2 ABC Spax screws			
		1			**Positioning pin D** for control part	1	9-39897-00-0-1	
1	2	1	1	2	**Bag of profiles G.U-968/150** [1]			
					Contents			
					1 Rod Ø 8 mm 1 Gliding rail P 1225 1 Running rail P 1300 1 Cover rail P 1480 1 Cover rail P 1608 1 Box of accessories			
					SW			
					600- 850	1	K-15279-20-0-*	
					851-1100	1	K-15279-25-0-*	
					1101-1350	1	K-15279-30-0-*	
					1351-1600	1	K-15279-35-0-*	

[1] * = Colour: 1 = EV 1, 5 = UC 5, 7 = white (RAL 9016)
[2] • = 1 box for handle pos. lh, 1 box for handle pos. rh

Working drawing
G.U-90 oZ 0-44424

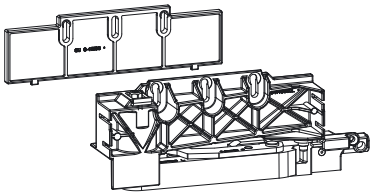

Packing runner 9-41596-00-0-6
Runner, front lh 6-32546-00-L-0
rh 6-32546-00-R-0

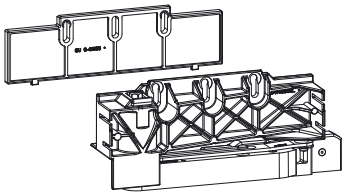

Packing runner 9-41596-00-0-6
Runner, rear lh 6-31759-00-L-0
rh 6-31759-00-R-0

Cover rail P 1608

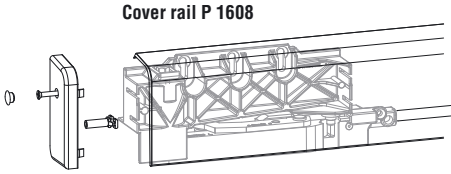

Cover 9-26687-00-0-*
ABC Spax screw H-00109-20-0-3
End cap 9-38543-00-L-*
Adapter sleeve 9-41597-01-0-6

Support
9-38527-00-0-0

Rod Ø 8 mm
Guide 6-24764-00-0-1

Cover rail P 1608

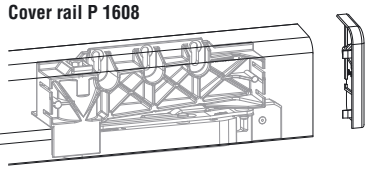

Adapter sleeve 9-41597-01-0-6
End cap 9-38543-00-R-*
ABC Spax screw H-00109-20-0-3
Cover 9-26687-00-0-*

Running rail P 1300
Control part 6-33329-00-0-*
Positioning pin D for control part

Running rail P 1300
Spring-loaded buffer 6-29565-00-0-*

Parallel slide and tilt fittings G.U-968/200 mZ, G.U-968/150 mZ, G.U-968/150 oZ, G.U-90 oZ

Application	Description	PU	Article No.
G.U-968/200 mZ, G.U-968/150 mZ	**Aluminium windows and patio doors**		
Assembly of handles	Drilling jig for geared handle	1	6-24697-00-0-0
	Drilling jig for handle inside and handle both sides	1	6-24025-00-0-1
	Stop for drilling jigs 6-24697 and 6-24025	1	9-27406-00-0-1
	Drilling jig for lockable gear	1	6-25745-00-0-1
Assembly of runners, stays, gliding and running rail	Drilling jig for runners, support and stay G.U-oZ	1	6-34878-99-0-0
	Drilling jig for runners and support	1	6-33342-00-0-0
	Drilling jig for gliding and running rail	1	6-24696-00-0-1
	Drilling jig for stop pin (control part scheme D)	1	6-30447-00-0-0
	Positioning jig for gliding rail	1	6-23246-00-0-0
	Positioning jig for running rail	1	6-23241-00-0-0
G.U-968/150 oZ	**Aluminium windows and patio doors**		
Assembly of handles	Drilling jig for handle	1	6-22459-00-0-0
	Stop for 6-22459 – fixed gear position	1	9-27406-00-0-1
	Drilling jig with stop for gear AP 25 to AP 50	1	6-25156-00-0-9
Assembly of runners, stays, gliding and running rail	Drilling jig for runners, support and stay G.U-oZ	1	6-34878-99-0-0
	Drilling jig for runners and support	1	6-33342-00-0-0
	Drilling jig for gliding and running rail	1	6-24696-00-0-1
	Drilling jig for stop pin (control part scheme D)	1	6-30447-00-0-0
	Positioning jig for gliding rail	1	6-23246-00-0-0
	Positioning jig for running rail	1	6-23241-00-0-0
Assembly of locking plates	1 set of positioning jigs for locking plates, fixed gear position length of locking plates 55 mm	1	6-32644-00-0-0
	1 positioning jigs for locking plates SRW 640- 700	1	6-33007-04-0-0
G.U-90 oZ	**Aluminium windows and patio doors**		
Assembly of handles	Drilling jig for handle	1	6-22459-00-0-0
	Stop for 6-22459 – fixed gear position	1	9-27406-00-0-1
	Drilling jig with stop for gear AP 25 to AP 50	1	6-25156-00-0-9
Assembly of runners, stays, gliding and running rail	Drilling jig for runners and support	1	9-30424-00-0-0
	Drilling jig for gliding and running rail	1	6-24696-00-0-1
	Drilling jig for stop pin (control part scheme D)	1	6-30447-00-0-0
	Positioning jig for gliding rail	1	6-23246-00-0-0
	Positioning jig for running rail	1	6-23241-00-0-0
Assembly of locking plates	1 set of positioning jigs for locking plates, fixed gear position length of locking plates 55 mm	1	6-32644-00-0-0
	1 positioning jigs for locking plates SRW 640- 700	1	6-33007-04-0-0

Order catalogue part 4
Slide-fold fittings for aluminium windows and patio doors

Contents

The present catalogue part contains all slide-fold fittings and accessories according to the latest state of the art.
The following indications will make you familiar with the concept of the catalogue and help you to handle it easily.

Catalogue structure

The present catalogue part is structured in the following way:
– Optional parts and turn handles
– Sets
– Drilling and assembly tools
– Tilt locking plates, locking plates

Optional parts and turn handles

The option pages show you optional parts and turn handles for all slide-fold fittings at a glance. All supplements of standard versions are clearly arranged.

Locking mechanisms

Fitting requirements according to sash size and scheme
The illustrations of the locking mechanisms are supplemented by corresponding parts tables helping to determine the hardware composition.
Parts supplementing standard versions are clearly presented and can be easily selected.

Runners, profiles and hinges

Fitting requirements for schemes 321 to 743
The illustrations of the fittings are supplemented by corresponding parts tables helping to determine the hardware composition.
Parts supplementing standard versions are clearly presented and can be easily selected.

Drilling and positioning jigs

Drilling jigs, positioning jigs and auxiliary tools for hardware assembly are grouped according to fitting types.

Tilt locking plates, locking plates and hinges

Tilt locking plates, locking plates and hinges are grouped according to profile system.

Order numbers

The order number gives information about
– the article
– its size
– its application - e.g. DIN lh or DIN rh
– its colour/finish

Example
Order number
9-33492-00-0-7

9-33492- - -	Article number
- -01- -	Size
- - -L-	Left hand assembly
- - -R-	Right hand assembly
- - -0-	Usable on both sides
- - - -1	F 1/EV 1, natural (silver colour), fer**GU**ard*silver
- - - -2	F 2/EV 2, champagne colour
- - - -3	F 3, brass colour (gold colour)
- - - -4	UC 3, medium bronze (medium brown)
- - - -A	F 4, bronze colour
- - - -C	Titanium colour
- - - -5	UC 5, dark bronze (dark brown RAL 8022)
- - - -6	onyx matt (black RAL 9005)
- - - -7	white (RAL 9016)
- - - -7T	white (RAL 9010)
- - - -8	Stainless steel (stainless steel colour)
- - - -*	Surface treatment variable (available colours see price list)

Prices

Single part price list "Total programme"
The prices are listed by ascending article numbers.

Additional sales documentation

Apart from the order catalogue, the following documentation on slide-fold fittings is available:
– Brochures and leaflets informing about product features and advantages
– Presentation boards of all fitting versions
– Working drawings with mounting instructions
– Instructions for maintenance and care

Slide-fold fittings
for aluminium windows and patio doors

Application

Range of applications for G.U slide-fold fittings:
– Slide-fold doors with 3 to 7 sashes,
– Slide-fold windows with 3 to 7 sashes,
each with running and gliding rails.

Locking mechanisms

Slide-fold locking mechanisms, inward opening
The locking mechanisms for inward opening slide-fold windows and patio doors feature one handle operation. Gear side with carrier for geared handle or lockable mill-in gears with 25 to 50 mm backset prepared for the installation of a profile cylinder.
All locking parts are designed for Euro groove 15/20 mm. The locking pins of locking mechanism and corner transmissions are adjustable. The clampable locking plates are adjustable to allow for optimum gasket pressure.
From sash widths and heights over 1200 mm, middle locks are used. Corner transmissions are provided with rust-proof 4-leaf stainless steel springs.
SW 355-1000 mm
SH -2400 mm

Runners, profiles and hinges

Slide-fold fittings G.U-822
Bottom running fittings for single sashes up to 80 kg, with 4-wheel carriages, adjustable for various sash overlap dimensions, height adjustable + 4 mm or - 1.5 mm. Wheels made of fabric reinforced laminated plastic with ball bearing. Sash weight up to 80 kg

Slide-fold fittings G.U-825
Top running fittings for single sashes up to 80 kg, with 4-wheel carriages, adjustable for various sash overlap dimensions, height adjustable + 4 mm or - 1.5 mm. Wheels made of fabric reinforced laminated plastic with ball bearing. Sash weight up to 80 kg

Tilt locking plates, locking plates

Frame profile specific tilt locking plates and locking plates according to table (see at the end of this catalogue chapter).

Drilling jigs, positioning jigs

Drilling jigs and other tools for hardware assembly are to be found at the end of this catalogue chapter and also in the respective working drawings.

Geared handles DIRIGENT, SPACIO and ADAGIO-A

The geared handles with concealed fixings are made of aluminium. The rosettes are provided with a rugged detent device. Lockable and removable handles as well as handles SPACIO with extended carrier fork complete the programme.

uncoated	without surface coating
F 1/EV 1	silver colour
UC 5	dark bronze
black	black (RAL 9005)
white	white (RAL 9016 or RAL 9010)

Turn handles DIRIGENT [1]

The handles are made of aluminium with concealed fixings. The rosettes have a robust retention feature and fixed cams. Lockable handles complete the programme.

Standard colours:

F 1/EV 1	silver colour
F 2/EV 2	new silver colour
F 3	gold colour
F 4	light brown
dark brown	dark brown (RAL 8022)
black	black (RAL 9005)
white	white (RAL 9016 or RAL 9010)

[1] More turn handles see part 3 of the present order catalogue.

Standard handles

Standard version for slide-fold fittings G.U-822 and G.U-825 with carrier: geared handle SPACIO;
standard version for slide-fold fittings G.U-822 and G.U-825 with mill-in gear and lock with cylinder bore: handle DIRIGENT-F.

Running rail P 1213

Aluminium running rail, suitable for use with slide-fold sashes with standard and special fittings.

Gliding rail P 1381

Aluminium gliding rail, suitable for use with slide-fold sashes (top guide).

Standard colours

Slide-fold fittings are supplied in the following standard colours:

EV 1	Visible aluminium parts anodized EV 1, cover profiles grey
UC 3	Visible aluminium parts anodized middle bronze, cover profiles middle brown
UC 5	Visible aluminium parts anodized dark bronze, cover profiles dark brown
white	Visible aluminium parts anodized EV 1, cover profiles white

Further colours and finishes on request.

Curved slide-fold units

If slide-fold units are arranged along a curved ground plan, the circle diametre must be 8 m at the minimum. Special guidelines of profile manufacturers have to be observed.

Materials, surface sealing fer**GU**ard*silver

The fitting parts are made of high quality steel, zinc die-casting or aluminium alloys.
Depending on the material, they are protected against corrosion by surface sealing with fer**GU**ard*silver or by anodisation (aluminium parts).

Standard surface sealing of slide-fold fittings: fer**GU**ard*silver

Locking components of slide-fold come with the surface sealing fer**GU**ard*silver.

Abbreviations

CB	Cylinder bore
FRW	Frame rebate width
G	Fixed gear position
lh	left hand
ML	Middle lock
PU	Packing unit
rh	right hand
SH	Sash height
ST	Sash thickness
SW	Sash width
TFW	Total frame width

Profile system manufacturers' information

It is important to observe the product information issued by the profile system manufacturers, especially information concerning construction and fabrication, maximum sash dimensions and weights and material features such as linear expansion of profiles.

Slide-fold fittings
for aluminium windows and patio doors

Sash arrangement according to schemes 321 to 651
with tilt-turn or side hung passage sash

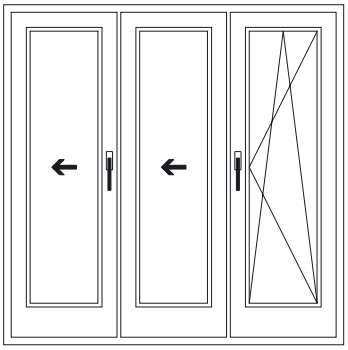

Scheme 321 [1]
2 slide-fold sashes,
1 tilt-turn sash

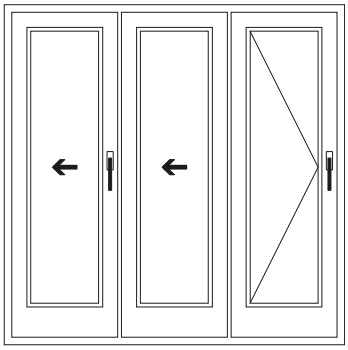

Scheme 330
2 slide-fold sashes,
1 side hung sash

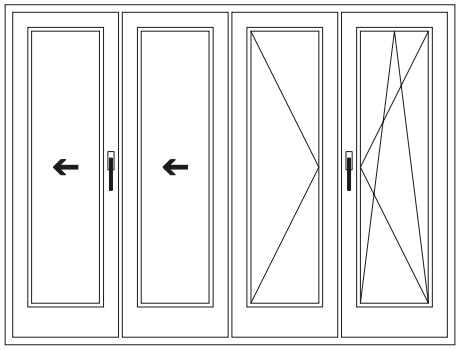

Scheme 431 [1]
2 slide-fold sashes,
1 inactive side hung sash, 1 tilt-turn sash

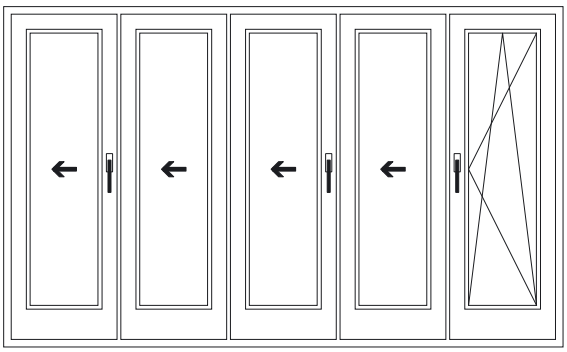

Scheme 541 [1]
4 slide-fold sashes,
1 tilt-turn sash

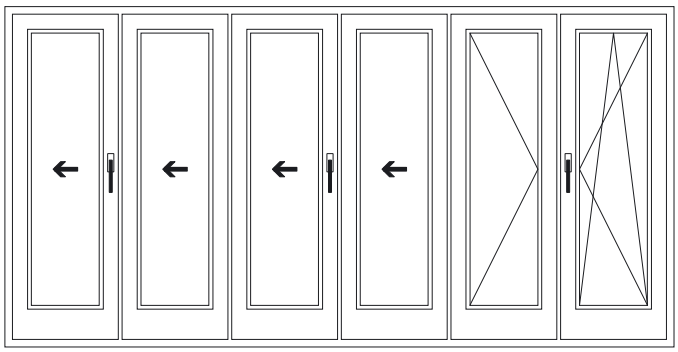

Scheme 651 [1]
4 slide-fold sashes,
1 inactive side hung sash, 1 tilt-turn sash

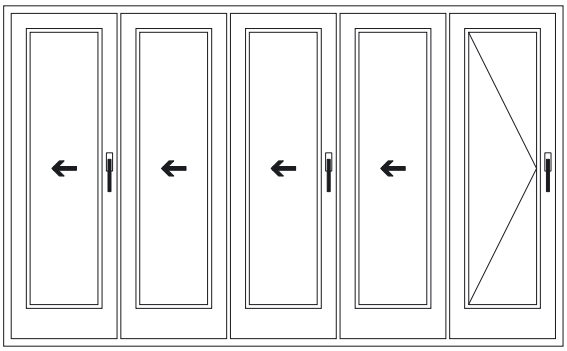

Scheme 550
4 slide-fold sashes,
1 side hung sash

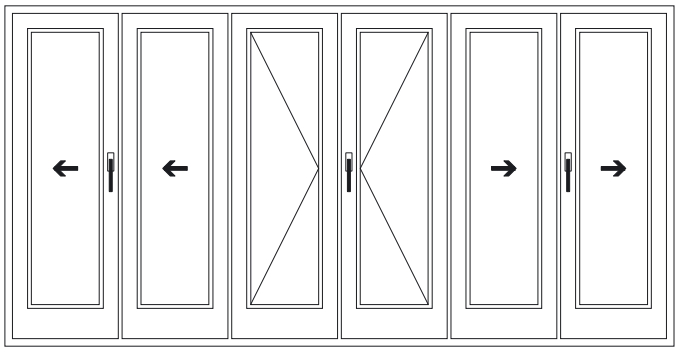

Scheme 633
4 slide-fold sashes,
1 inactive side hung sash, 1 side hung sash

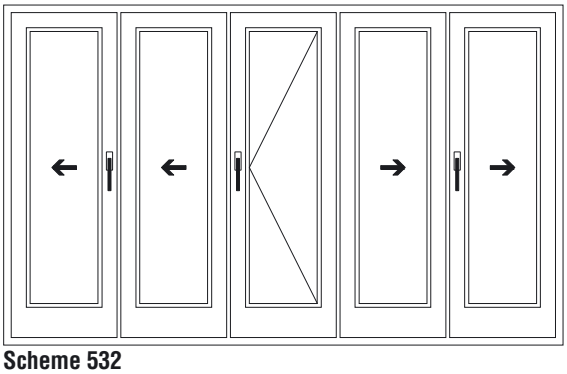

Scheme 532
4 slide-fold sashes,
1 side hung sash

Legend:

[1] Passage sash also as side hung sash
– with sash hinges and JET AK 8 side hung locking mechanism

Slide-fold fittings
for aluminium windows and patio doors

Sash arrangement according to schemes 743 to 770
with tilt-turn or side hung passage sash

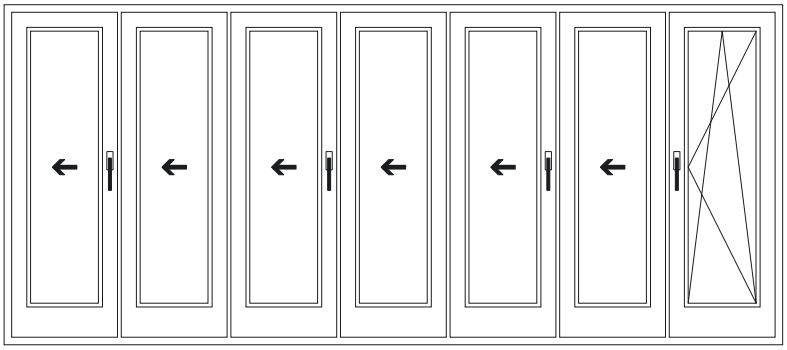

Scheme 761 [1]
6 slide-fold sashes,
1 tilt-turn sash

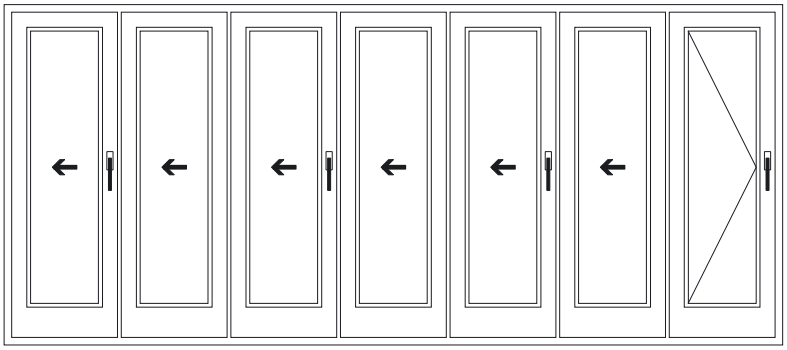

Scheme 770
6 slide-fold sashes,
1 side hung sash

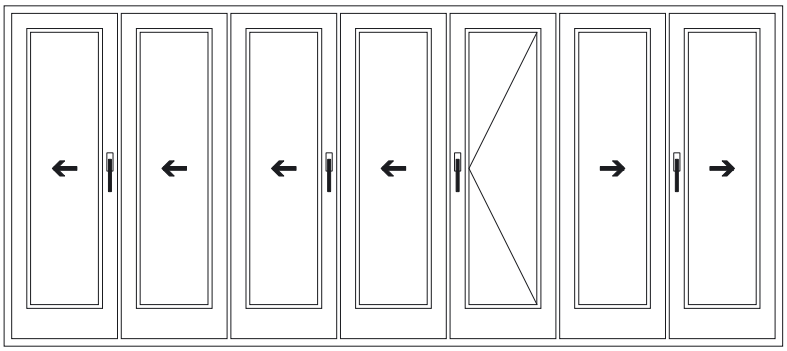

Scheme 743
6 slide-fold sashes,
1 side hung sash

Legend:

[1] Passage sash also as side hung sash
– with sash hinges and JET AK 8 side hung locking mechanism

Assembly dimensions – frame and sash profile

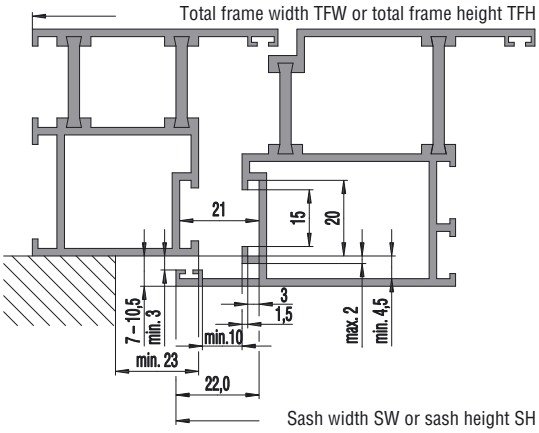

Frame and sash profile
Sash with Euro groove 15/20

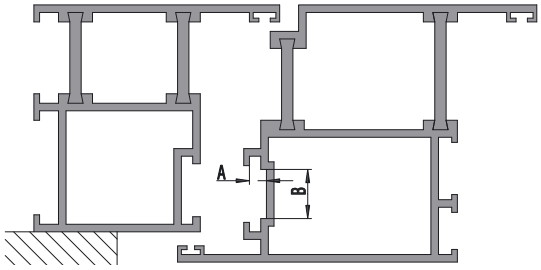

Corner transmissions

6-30889-**00**-0-1 Euro groove 15/20
Deepened Euro groove 15/20 with dim. A = max. 3,9 mm or dim. B = max. 13 mm

6-30889-**01**-0-1 Deepened Euro groove 15/20 with dim. A = 4,0 up to 5,1 mm

Frame and sash profile
Sash with deepened Euro groove 15/20

Assembly dimensions – false mullion profile

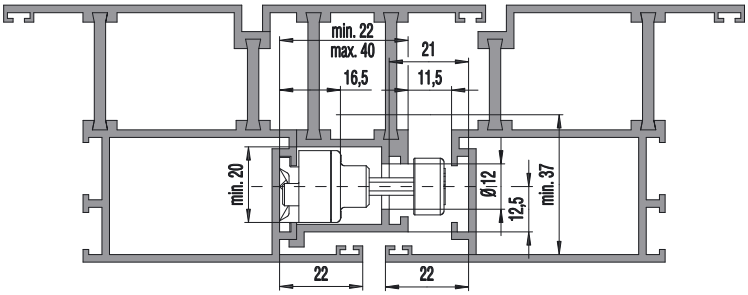

False mullion profile with single groove for locking plates
Locking with inavctive sash gear or shoot bolts

Assembly dimensions – frame grooves

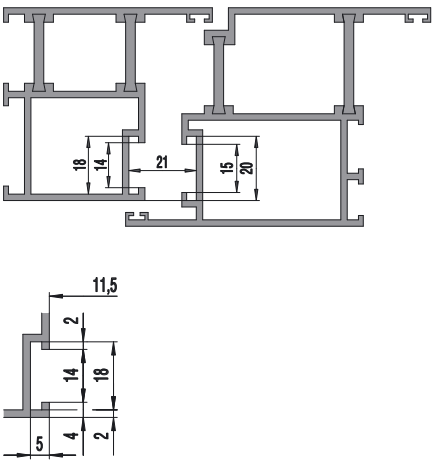

Frame groove 14/18

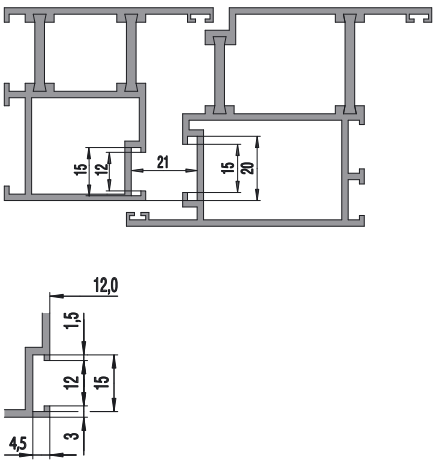

Frame groove 12/15

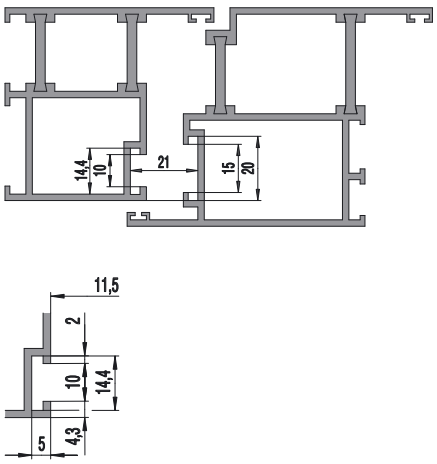

Frame groove 10/14

Assembly dimensions – gliding rails, running rails, runners, hinges

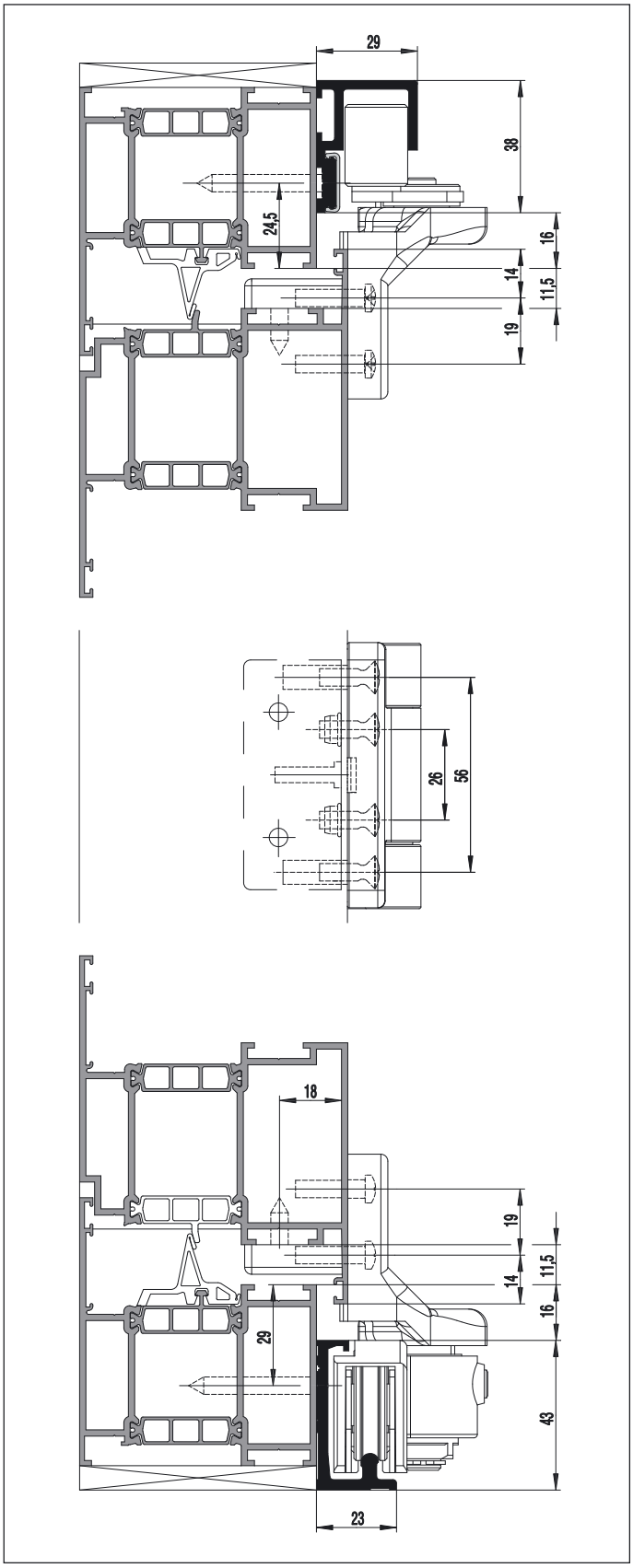

Slide-fold fittings G.U-822

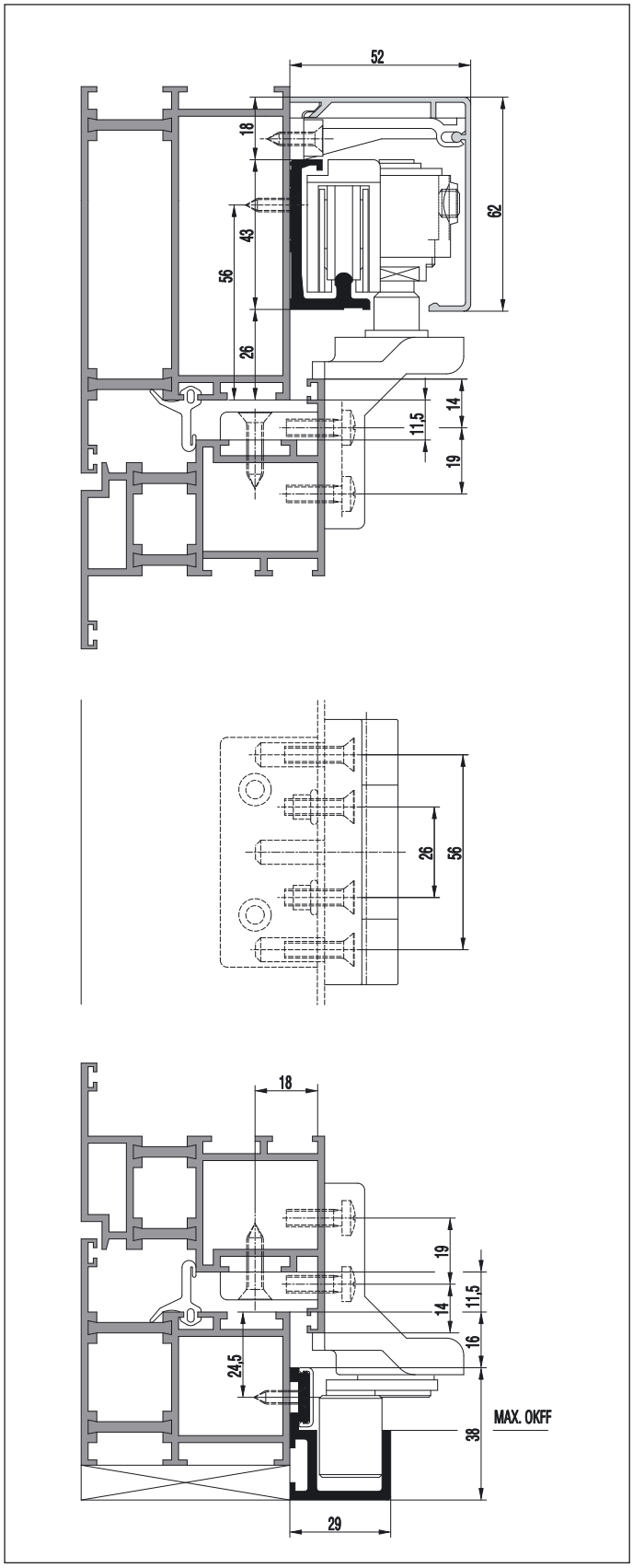

Slide-fold fittings G.U-825

Drilling and milling dimensions

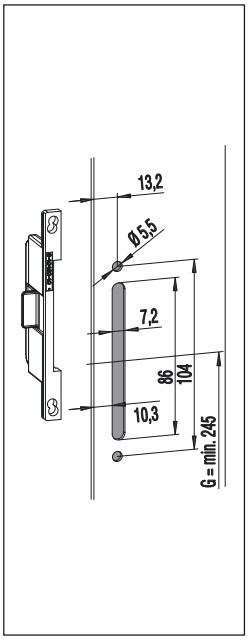

Dimensions for geared handle and WOSD (wrong operation safety device)
Drilling jig 6-25373-01-0-0

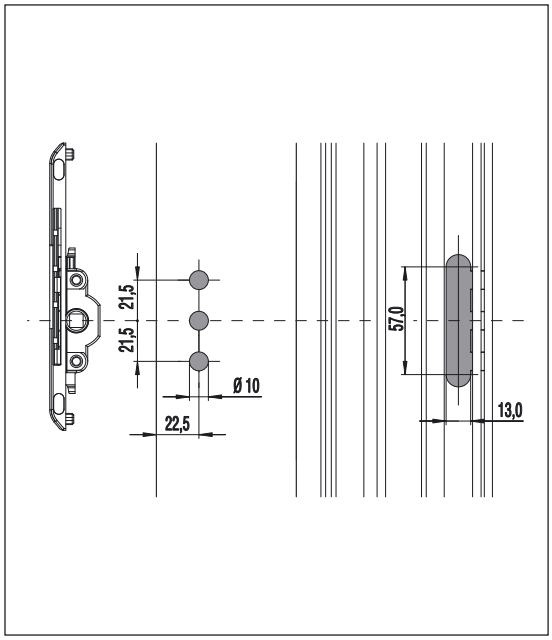

Dimensions for mill-in gears with or without WOSD

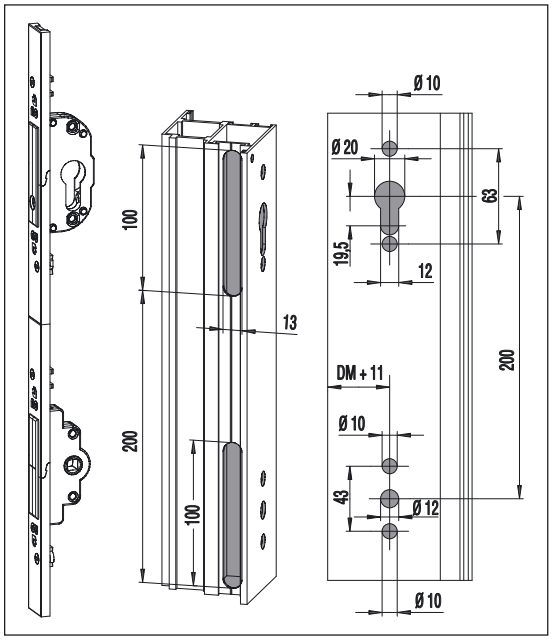

Dimensions for mill-in gears with or without WOSD and lock with cylinder bore
Drilling jig 6-26191-00-0-2

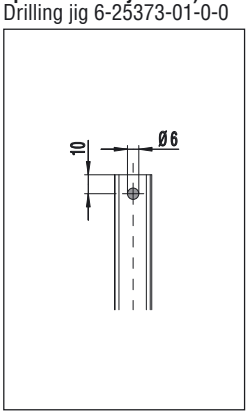

Push rod drill holes

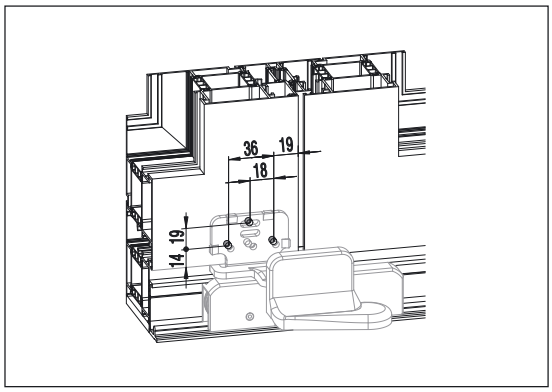

Dimensions for corner bearing
Drilling jig 6-25831-01-0-9

Push rod cutting lengths with 22 mm sash overlap

Tilt-turn fittings

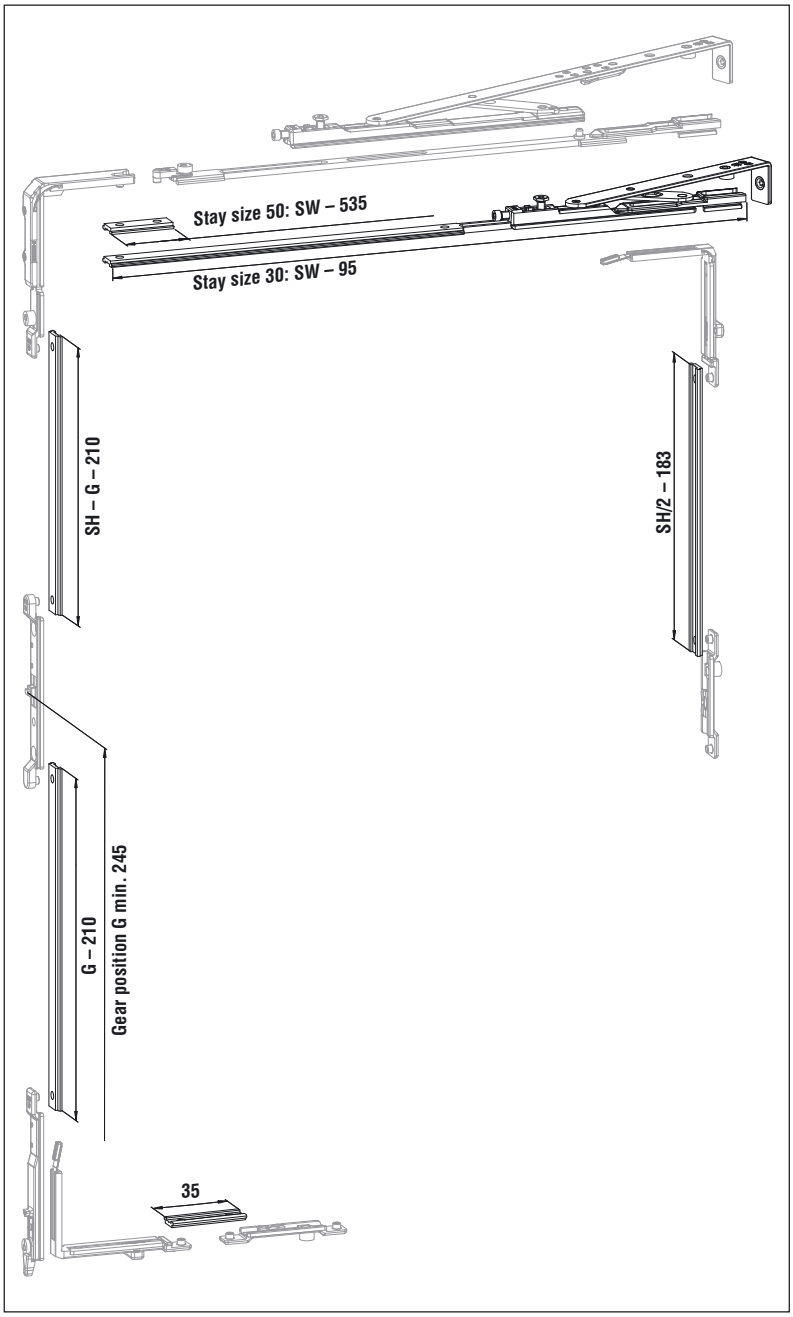

Inactive sash, fold sash and side hung fittings

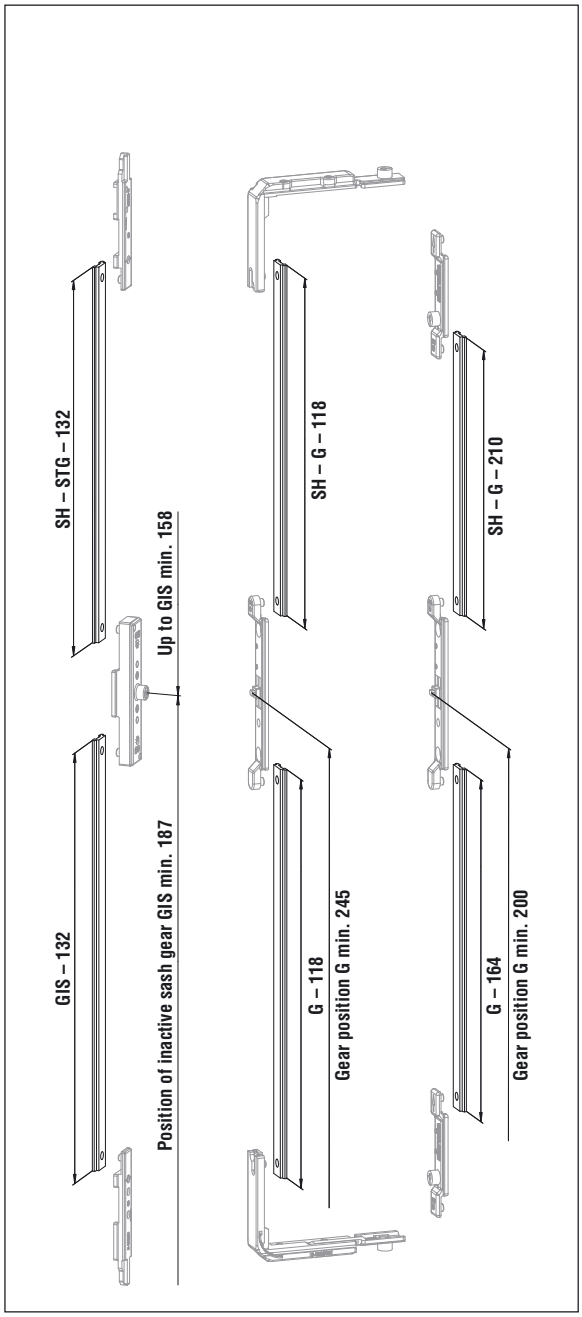

Geared handles SPACIO aluminium, painted – 1 carrier fork 22 mm

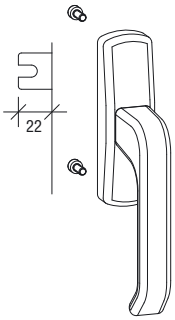

Bag of geared handle SPACIO – not lockable
2 screws
G-46551-96-0-*

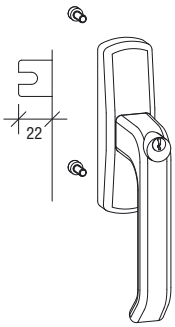

Bag of geared handle SPACIO – lockable
2 screws, 2 keys
G-46553-96-0-*

Bag of geared handle SPACIO – lockable for first tilt fittings
2 screws, 2 keys
G-46557-96-0-*

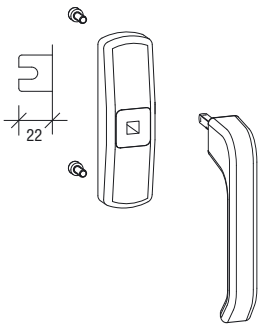

Bag of geared rosette SPACIO
2 screws
G-46555-96-0-*

Removable handle SPACIO
G-18888-00-0-*

Geared handles SPACIO aluminium, painted – 1 carrier fork 33 mm

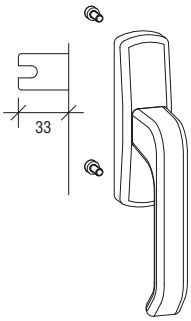

Bag of geared handle SPACIO – not lockable
2 screws
G-46595-96-0-*

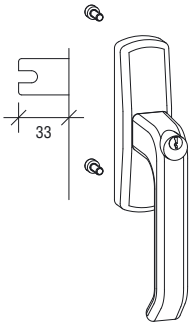

Bag of geared handle SPACIO – lockable
2 screws, 2 keys
G-46597-96-0-*

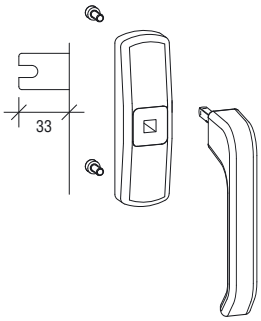

Bag of geared rosette SPACIO
2 screws
G-46596-96-0-*

Removable handle SPACIO
G-18888-00-0-*

Geared handles SPACIO aluminium, painted – 2 carrier forks 22 mm – DIN right hand

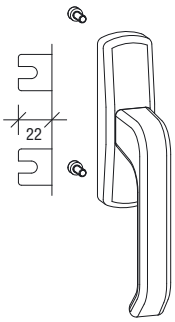

Bag of geared handle SPACIO – not lockable
2 screws
G-46552-96-R-*

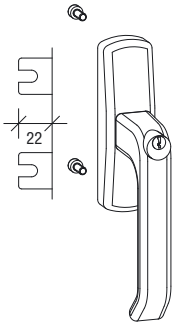

Bag of geared handle SPACIO – lockable
2 screws, 2 keys
G-46554-96-R-*

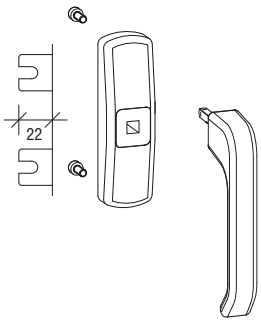

Bag of geared rosette SPACIO
2 screws
G-46556-96-R-*

Removable handle SPACIO
G-18888-00-0-*

Bag of accessories
Conversion of SPACIO handles with 2 carrier forks to DIN left hand
G-46550-00-L-1

Geared handles ADAGIO-A powder coated

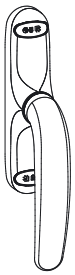

Geared handle ADAGIO-A – not lockable

6-31723-00-0-*

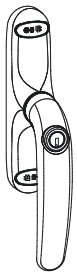

Geared handle ADAGIO-A – lockable
2 keys
6-31724-00-0-*

Clip – neutral
9-41505-00-0-*

Accessories for ADAGIO-A

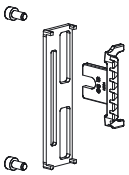

Bag of accessories for 1 carrier fork 22 mm
K-15814-00-0-1

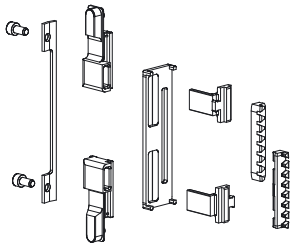

Bag of accessories for 2 carrier forks
K-15815-00-0-1

Accessories for side hung sashes with geared handle SPACIO

90° limiter
for aluminium rosettes
9-34612-00-0-6

Accessories for geared handles SPACIO and ADAGIO-A

Fixing plate – single
hole centre distance mm

104	**9-41506-00-0-8**

Wrong operation safety device (WOSD) – single
hole centre distance mm

84 and 98	**6-31065-10-0-1**
96 and 104	**6-31065-40-0-1**

Handles DIRIGENT-F for mill-in gears [1]

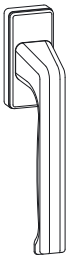

DIRIGENT-F
Spindle 25 6-28072-25-0-*
Spindle 29 6-28072-29-0-*

DIRIGENT-F/Z
with push button cylinder, all keys alike
Spindle 29 6-28075-29-0-*

DIRIGENT-F/F flat
6-28101-00-0-*

MODENA-F/Z 100 Nm [2]
for security windows and patio doors
Spindle 29 6-34397-29-0-*

DIRIGENT-F/SG
Spindle 50 8-00694-50-0-7

Rosette/F inside – flat
6-24913-00-0-*

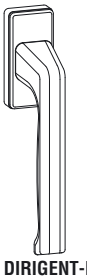

DIRIGENT-F
inside – without spindle
6-28072-00-0-*

DIRIGENT-F/AF,
outside – flat
6-25223-00-0-*

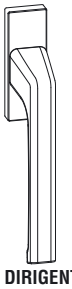

DIRIGENT-F/A,
outside
6-25993-00-0-*

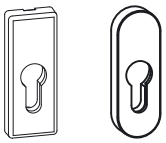

Rosette with CB inside
square K-17205-02-0-*
oval K-17204-02-0-*

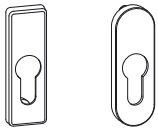

Rosette PZ/A outside
square 9-43605-02-0-*
oval 9-43582-02-0-*

Spindle
ST 56-68 9-26874-56-0-1
ST 69-80 9-26874-69-0-1

Inside/ outside operation
Countersunk screw M 5
ST 50-54 9-13255-60-0-1
ST 55-59 9-13255-65-0-1
ST 60-64 9-13255-70-0-1
ST 65-69 9-13255-75-0-1
ST 70-74 9-13255-80-0-1
ST 75-80 9-13255-85-0-1

Inside operation
Countersunk screw M 5
Spindle 25 9-13255-30-0-1
Spindle 29 9-13255-35-0-1

Knob lock
Backset 25 - 50 mm
K-13282-00-0-*

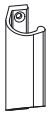

Pull handle outside
9-22921-00-0-*

[1] = More turn handles see part 3 of the present order catalogue.
[2] = Tested to DIN V EN V 1627 for resistance to pull-off and twist-off attempts at 100 Nm.

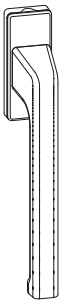

DIRIGENT-HL
elongated
Rosette 32 x 81 mm
Spindle 25 6-31382-25-0-*
Spindle 29 6-31382-29-0-*

DIRIGENT-HL
elongated
Rosette 32 x 81 mm
push button cylinder
Spindle 30 6-31383-30-0-*

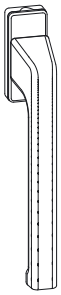

DIRIGENT-HL
elongated
Rosette 28 x 67 mm
Spindle 33 6-32629-33-0-*

Mill-in gears

Mill-in gear 180°
without wrong operation safety device (WOSD)
Backset 14 mm
6-31280-00-0-1

Mill-in gear 180°
without wrong operation safety device (WOSD)
6-25916--0-1**

Mill-in gear 180°
with wrong operation safety device (WOSD)
6-25917--0-1**

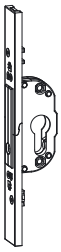

Lock
with cylinder bore
6-25918--0-1**

**** = Sizes**
25, 30, 35, 40, 45, 50

G.U Face fixed window lock

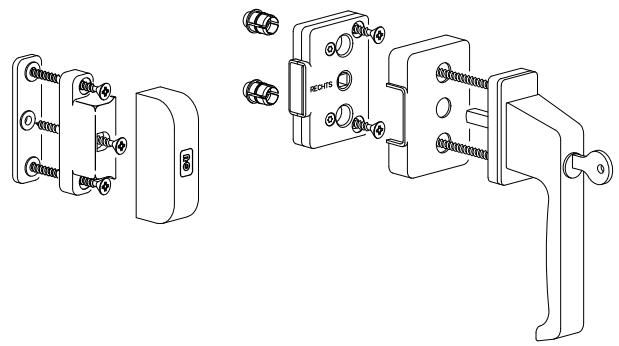

Box of face fixed window lock with turn handle DIRIGENT F/Z

EV 1	**K-14662-00-0-11**
dark brown	**K-14662-00-0-5**
white	**K-14662-00-0-7**

Contents of box

1 Turn handle DIRIGENT F/Z, lockable
1 Spindle 7 x 75 mm
1 Face fixed lock
1 Cover for face fixed lock
2 Sleeve for Ø 10 mm
2 Sleeve for Ø 12 mm
1 Strike box
1 Cover for strike box
1 Packing 3 mm
1 Packing 4 mm
1 Packing 5 mm
1 Packing 6 mm
7 Spax countersunk screw 5 x 55 mm

JET Slit ventilation catch

Slit ventilation catch

Cover

Catch plate

Fitting requirements JET Slit ventilation catch for aluminium windows

Quantity	Description	PU	Article No.
1	**JET Slit ventilation catch**, with sash overlap	10	K-12223-90-0-*
1	**JET Slit ventilation catch**, without sash overlap	10	K-12216-90-0-*
	Drilling jig	1	6-23861-00-0-0

Working drawing 0-38928

Limiting stay

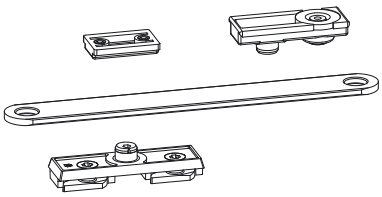

Bag of limiting stay with brake

Frame groove	Stay length	SW mm	PU	Article No.
14/18	150 mm	> 260	1	G-12952-14-0-1
14/18	250 mm	> 360	1	G-12953-14-0-1
12/15	150 mm	> 260	1	G-12952-12-0-1
12/15	250 mm	> 360	1	G-12953-12-0-1
10/14	150 mm	> 260	1	G-12952-10-0-1
10/14	250 mm	> 360	1	G-12953-10-0-1

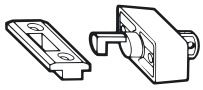

Bag of blocking lock screw-on version – with key K-12968-00-0-*

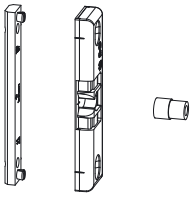

Bag of door catch K-12962-00-0-1

Locking pin, single A-02823-00-0-0

Carrier pin, single push rod one-piece G-14694-00-0-0

Carrier pin, single push rod two-piece G-11669-00-0-0

Slide-fold fittings G.U-825 at bottom in- and outside without threshold

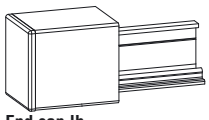

End cap lh 9-32740-00-L-* Cover rail P 1391 Running rail P 1213

Support 9-32741

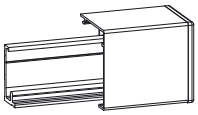

Running rail P 1213 Cover rail P 1391 End cap rh 9-32740-00-R-*

Gliding rail P 1410

Bag of profiles G.U-825
at bottom in- and outside without threshold

TFW mm	PU	Article No.
-2960	1	K-14679-30-0-*
2961-6700	1	K-14679-67-0-*

Locking plates according to frame groove

Description	Gasket pressure	Illustration	Frame groove 14/18 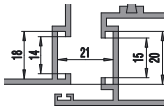	12/15 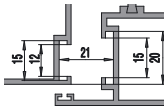	10/14 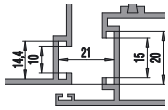
Tilt locking plate Tilt-turn and side hung sashes clampable	standard + 0,7 mm		6-30964-00-0-1 6-30964-01-0-1	6-30964-00-0-1 6-30964-01-0-1	6-30964-00-0-1 6-30964-01-0-1
Locking plate Frame profiles clampable	standard + 0,7 mm		6-30959-00-0-1 6-30959-01-0-1	6-30959-00-0-1 6-30959-01-0-1	6-30959-00-0-1 6-30959-01-0-1
Locking plate Frame profiles clampable	adjustable		G-11071-00-0-1	G-11800-00-0-1	G-11065-00-0-1
Locking plate for false mullion clampable	standard + 1,5 mm + 3,0 mm		6-30961-00-0-1 G-19658-02-0-1 G-19658-03-0-1	6-30961-00-0-1 G-19658-02-0-1 G-19658-03-0-1	6-30961-00-0-1 G-19658-02-0-1 G-19658-03-0-1
Supporting plate Tilt-turn sash clampable			6-31066-00-0-1	6-31066-00-0-1	6-31066-00-0-1
Wedge for frame First tilt and side hung sashes clampable			6-30998-00-0-1	6-30998-00-0-1	6-30998-00-0-1
Wedge for sash Tilt-turn, first tilt, side hung and inactive sashes clampable			9-40404-00-0-1	9-40404-00-0-1	9-40404-00-0-1

Sash hinges according to profile systems

Profile systems aluminium	Z-shaped sash profile	T-shaped sash profile	Frame profile G.U-822	Frame profile G.U-825	False mullion	Frame groove	Working drawing G.U-822	Working drawing G.U-825	Box of sash hinges
Akotherm AT 730	2551		2503		2559	12/15	0-44181-1		K-13205-01-0-1
Alcan Serie Contact	4024 F		4002 D	4043 M	4029 F	12/15	0-42650-1	0-42652-1	K-13205-01-0-1
Alcoa AA 610	771 597		771 575			10/14	0-42649-1	0-42671-1	K-13205-01-0-1
Alcoa RT 620	734 077		717 834	717 839	717 876	10/14	0-42649-1	0-42671-1	K-13205-03-0-1
Alumil System 11500	11934		11514		11658	12/15	0-44806-1		K-13205-03-0-1
Bug 90	831 802		831 604	831 620	831 810	10/14			K-13205-03-0-1
Doral						10/14	0-43371-1		K-13205-01-0-1
Egybel	901 053		901 010		901 080	14/18	0-43740-1		K-13205-03-0-1
EurAl Serie 65	162 100		161 100		165 100	14/18	0-42764-1		K-13205-03-0-1
Heroal Serie 40	6402		6422		6403	10/14	0-42675-1		K-13205-01-0-1
Inespal						14/18	0-43677-1		K-13205-01-0-1
Kubal Serie 2000 W	2662		2605		2607	10/14	0-43205-1		K-13205-01-0-1
MKF TKI 602	602-02-022		602-01-015	602-01-015	602-02-026		0-42645-1	0-42654-1	K-13205-01-0-1
Pechiney	N 113351		N 113311		N 113352	10/14	0-42767-1	0-42771-1	K-13205-01-0-1
Philippi Serie 2000						14/18	0-43532-1		K-13205-01-0-1
Redal Serie 64	91.125		91.025		91.055	14/18			K-13205-01-0-1
Sapa						14/18	0-43062-1		K-13205-01-0-1
SAPA-Ekonal E75 Plus	34V02		34K02		34V05	14/18	0-44123-1		K-13205-01-0-1
SAPA-Ekonal i60	56030	56031	56012		56041	12/15	0-42966-1		K-13205-01-0-1
SAPA-Ekonal i70	42330	42331	42004	42807		12/15	0-42651-1	0-42655-1	K-13205-01-0-1
SMS Serie 15 000	15 720		15 492		15 800	10/14	0-43564-1		K-13205-01-0-1
Sykon	5332		5330		5338	10/14	0-42577-1		K-13205-01-0-1
VAW Serie 75E	000 479		002 279		001 179	14/18			K-13205-01-0-1

Windows and patio doors with geared handle inside for sash profiles with euro groove 15/20 mm
Schemes 321, 541 and 761 – passage sash: tilt-turn

Folding sash

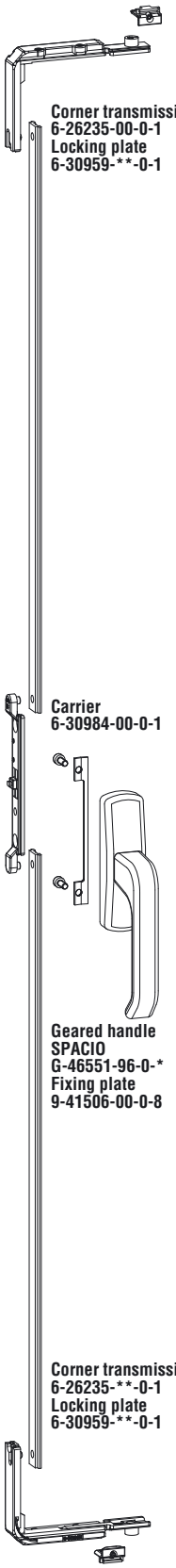

Passage sash

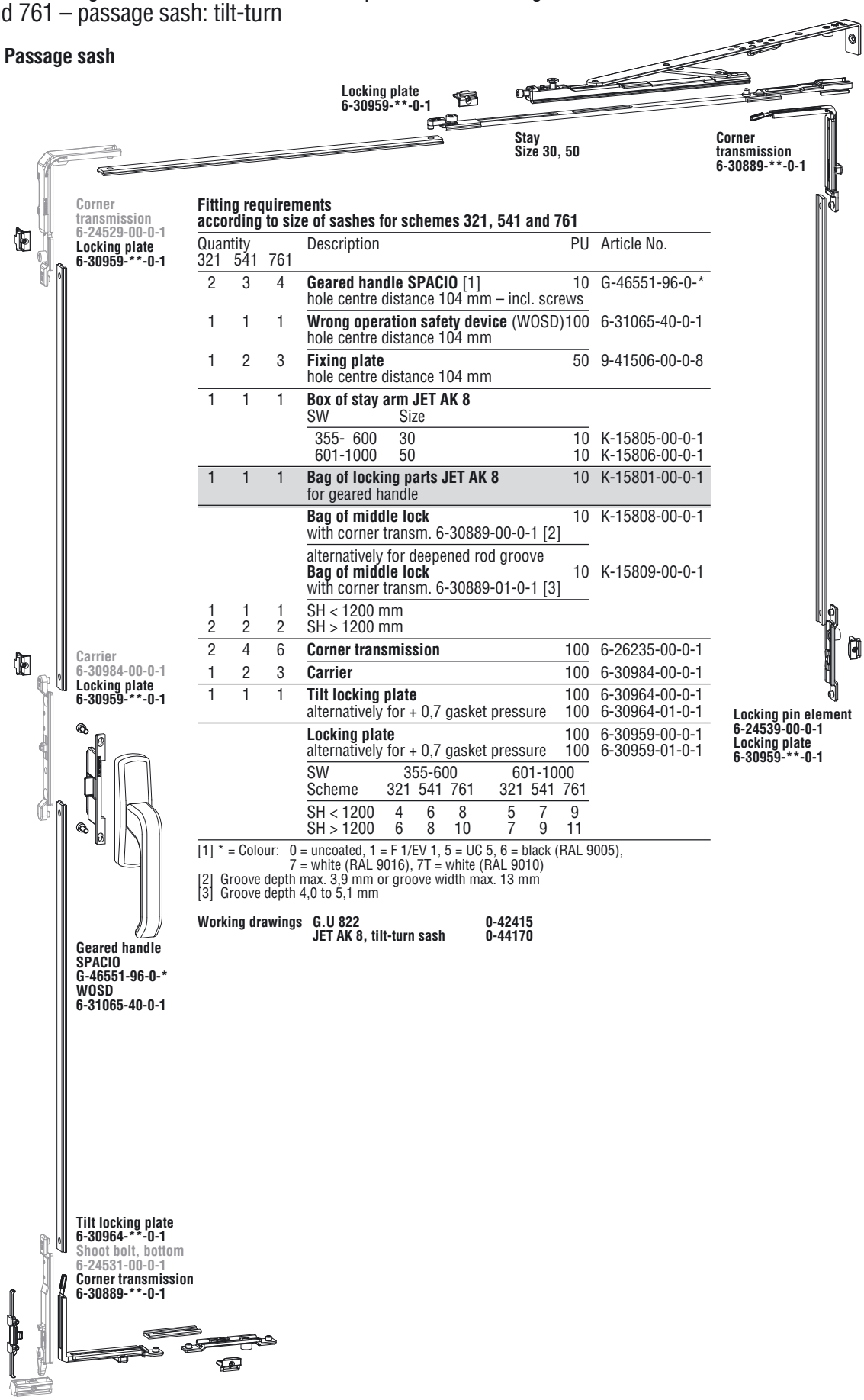

Fitting requirements
according to size of sashes for schemes 321, 541 and 761

Quantity 321	541	761	Description	PU	Article No.
2	3	4	**Geared handle SPACIO** [1] hole centre distance 104 mm – incl. screws	10	G-46551-96-0-*
1	1	1	**Wrong operation safety device** (WOSD) hole centre distance 104 mm	100	6-31065-40-0-1
1	2	3	**Fixing plate** hole centre distance 104 mm	50	9-41506-00-0-8
1	1	1	**Box of stay arm JET AK 8** SW Size		
			355- 600 30	10	K-15805-00-0-1
			601-1000 50	10	K-15806-00-0-1
1	1	1	**Bag of locking parts JET AK 8** for geared handle	10	K-15801-00-0-1
			Bag of middle lock with corner transm. 6-30889-00-0-1 [2]	10	K-15808-00-0-1
			alternatively for deepened rod groove **Bag of middle lock** with corner transm. 6-30889-01-0-1 [3]	10	K-15809-00-0-1
1 2	1 2	1 2	SH < 1200 mm SH > 1200 mm		
2	4	6	**Corner transmission**	100	6-26235-00-0-1
1	2	3	**Carrier**	100	6-30984-00-0-1
1	1	1	**Tilt locking plate**	100	6-30964-00-0-1
			alternatively for + 0,7 gasket pressure	100	6-30964-01-0-1
			Locking plate	100	6-30959-00-0-1
			alternatively for + 0,7 gasket pressure	100	6-30959-01-0-1

SW	355-600			601-1000		
Scheme	321	541	761	321	541	761
SH < 1200	4	6	8	5	7	9
SH > 1200	6	8	10	7	9	11

[1] * = Colour: 0 = uncoated, 1 = F 1/EV 1, 5 = UC 5, 6 = black (RAL 9005), 7 = white (RAL 9016), 7T = white (RAL 9010)
[2] Groove depth max. 3,9 mm or groove width max. 13 mm
[3] Groove depth 4,0 to 5,1 mm

Working drawings **G.U 822** **0-42415**
JET AK 8, tilt-turn sash **0-44170**

Windows and patio doors with geared handle inside for sash profiles with euro groove 15/20 mm
Schemes 431 and 651 – passage sash: tilt-turn

Folding sash

Passage sash

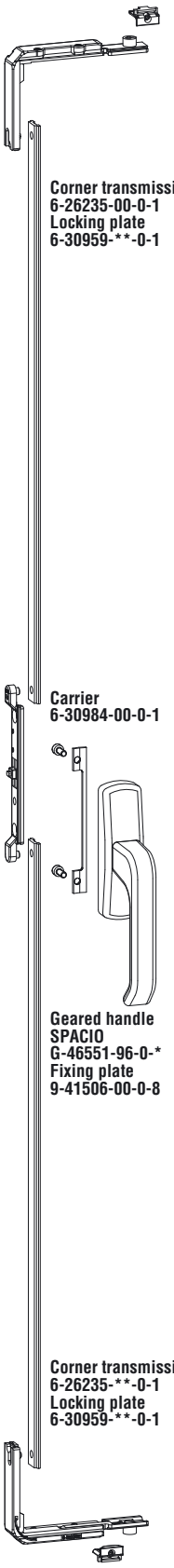

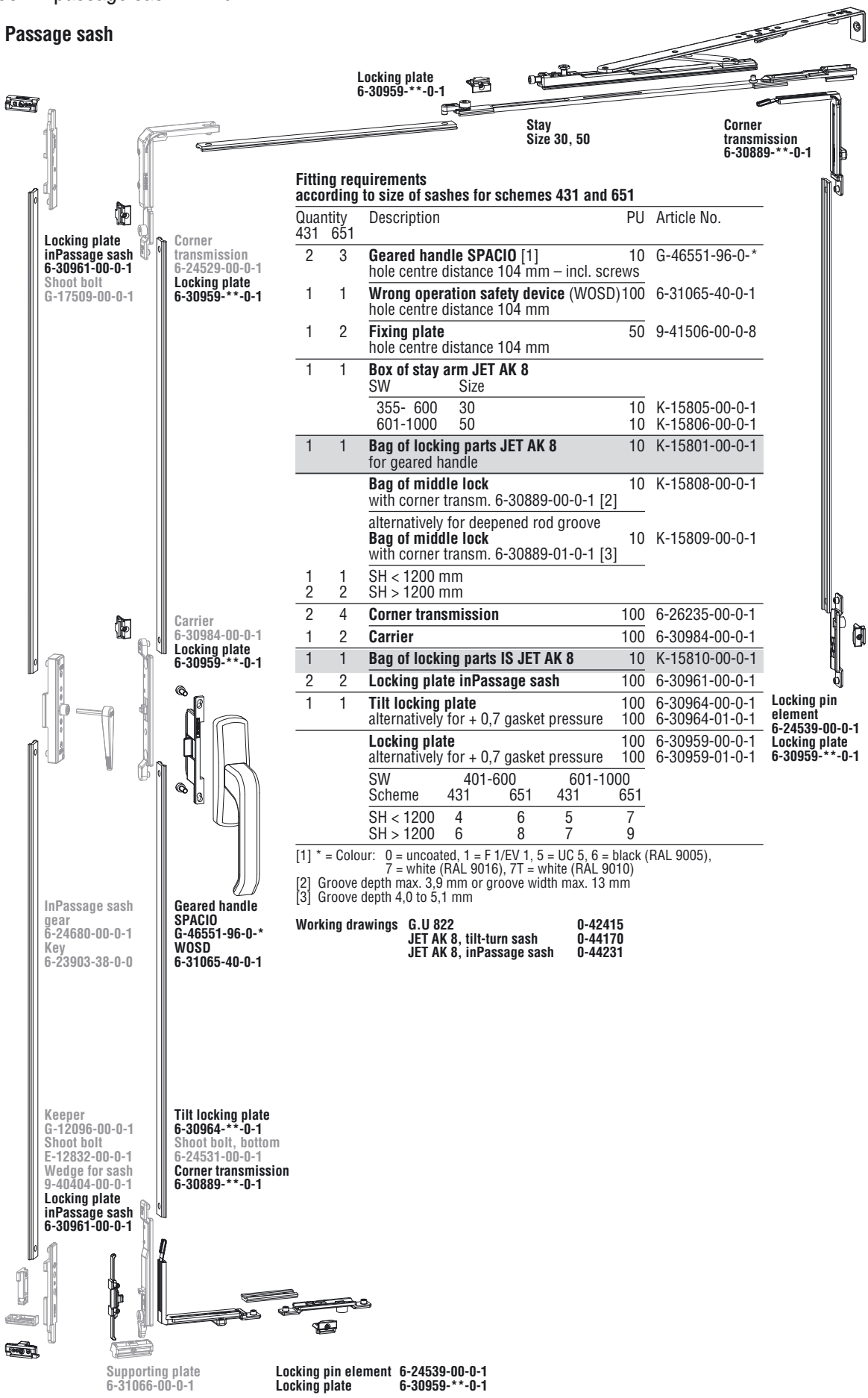

Fitting requirements
according to size of sashes for schemes 431 and 651

Quantity 431	Quantity 651	Description	PU	Article No.
2	3	**Geared handle SPACIO** [1] hole centre distance 104 mm – incl. screws	10	G-46551-96-0-*
1	1	**Wrong operation safety device** (WOSD) hole centre distance 104 mm	100	6-31065-40-0-1
1	2	**Fixing plate** hole centre distance 104 mm	50	9-41506-00-0-8
1	1	**Box of stay arm JET AK 8** SW / Size		
		355- 600 / 30	10	K-15805-00-0-1
		601-1000 / 50	10	K-15806-00-0-1
1	1	**Bag of locking parts JET AK 8** for geared handle	10	K-15801-00-0-1
		Bag of middle lock with corner transm. 6-30889-00-0-1 [2]	10	K-15808-00-0-1
		alternatively for deepened rod groove **Bag of middle lock** with corner transm. 6-30889-01-0-1 [3]	10	K-15809-00-0-1
1 2	1 2	SH < 1200 mm SH > 1200 mm		
2	4	**Corner transmission**	100	6-26235-00-0-1
1	2	**Carrier**	100	6-30984-00-0-1
1	1	**Bag of locking parts IS JET AK 8**	10	K-15810-00-0-1
2	2	**Locking plate inPassage sash**	100	6-30961-00-0-1
1	1	**Tilt locking plate** alternatively for + 0,7 gasket pressure	100 100	6-30964-00-0-1 6-30964-01-0-1
		Locking plate alternatively for + 0,7 gasket pressure	100 100	6-30959-00-0-1 6-30959-01-0-1

SW	401-600		601-1000	
Scheme	431	651	431	651
SH < 1200	4	6	5	7
SH > 1200	6	8	7	9

[1] * = Colour: 0 = uncoated, 1 = F 1/EV 1, 5 = UC 5, 6 = black (RAL 9005), 7 = white (RAL 9016), 7T = white (RAL 9010)
[2] Groove depth max. 3,9 mm or groove width max. 13 mm
[3] Groove depth 4,0 to 5,1 mm

Working drawings

G.U 822	**0-42415**
JET AK 8, tilt-turn sash	**0-44170**
JET AK 8, inPassage sash	**0-44231**

Windows and patio doors with geared handle inside for sash profiles with euro groove 15/20 mm
Schemes 330, 532, 550, 633, 743 and 770 – passage sash: side hung

Folding sash | **Passage sash**

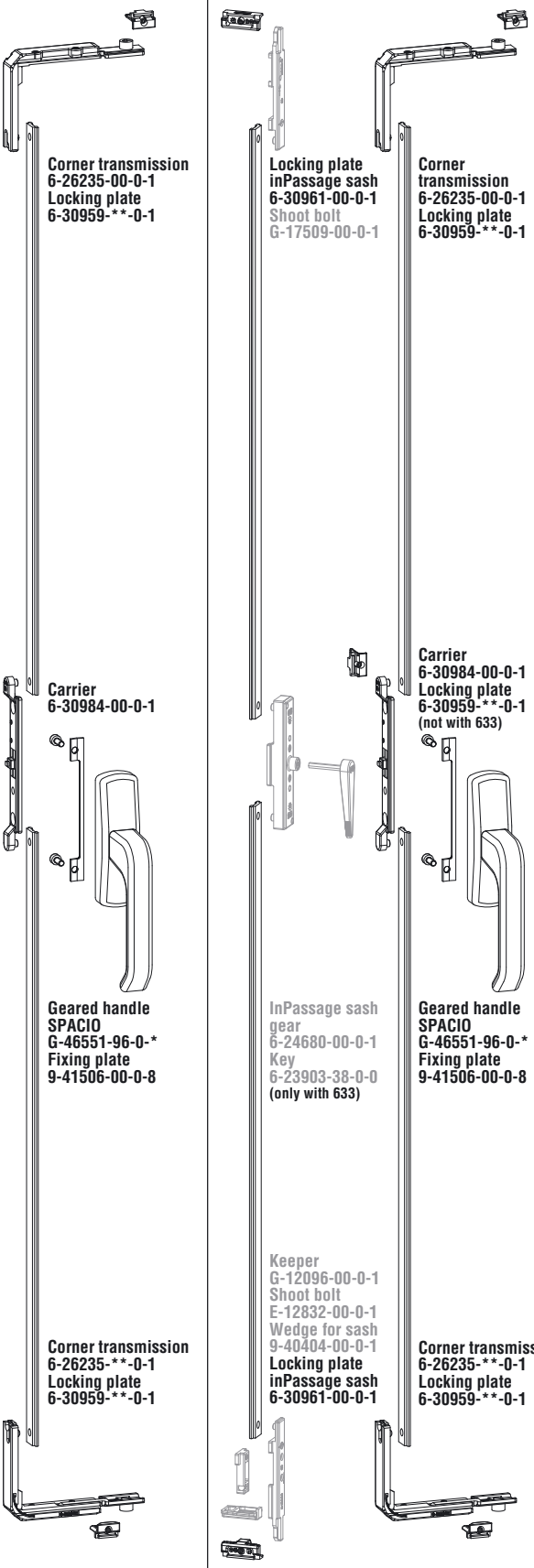

Fitting requirements
according to size of sashes for schemes 330, 532, 550, 633, 743 and 770

Quantity 330	532	550	633	743	770	Description	PU	Article No.
2	3	3	3	4	4	**Geared handle SPACIO** [1] hole centre distance 104 mm – incl. screws	10	G-46551-96-0-*
2	3	3	3	4	4	**Fixing plate** hole centre distance 104 mm	50	9-41506-00-0-8
4	6	6	6	8	8	**Corner transmission**	100	6-26235-00-0-1
2	3	3	3	4	4	**Carrier**	100	6-30984-00-0-1
			1			**Bag of locking parts IS JET AK 8**	10	K-15810-00-0-1
			2			**Locking plate inPassage sash**	100	6-30961-00-0-1
						Locking plate alternatively for + 0,7 gasket pressure	100 100	6-30959-00-0-1 6-30959-01-0-1
4 5	6 7	6 7	6 7	8 9	8 9	SH < 1200 mm SH > 1200 mm		

[1] * = Colour: 0 = uncoated, 1 = F 1/EV 1, 5 = UC 5, 6 = black (RAL 9005),
7 = white (RAL 9016), 7T = white (RAL 9010)

Working drawings		
	G.U 822	**0-42415**
	JET AK 8, side hung sash	**0-44231**
	JET AK 8, inPassage sash	**0-44231**

Windows and patio doors with mill-in gear for sash profiles with euro groove 15/20 mm
Schemes 321, 541 and 761 – passage sash: tilt-turn

Folding sash

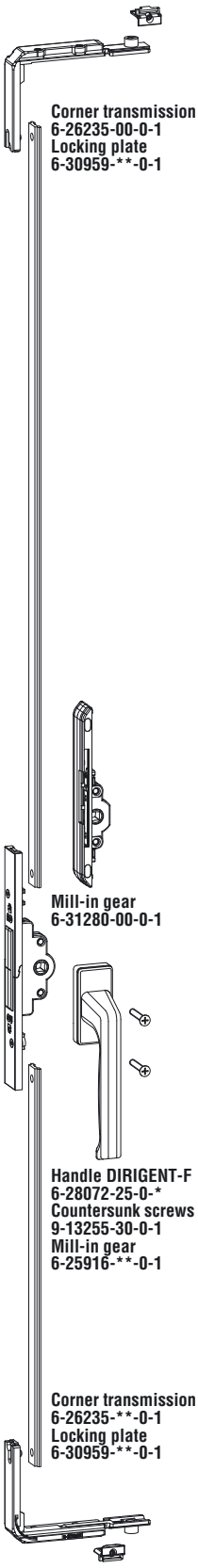

Passage sash

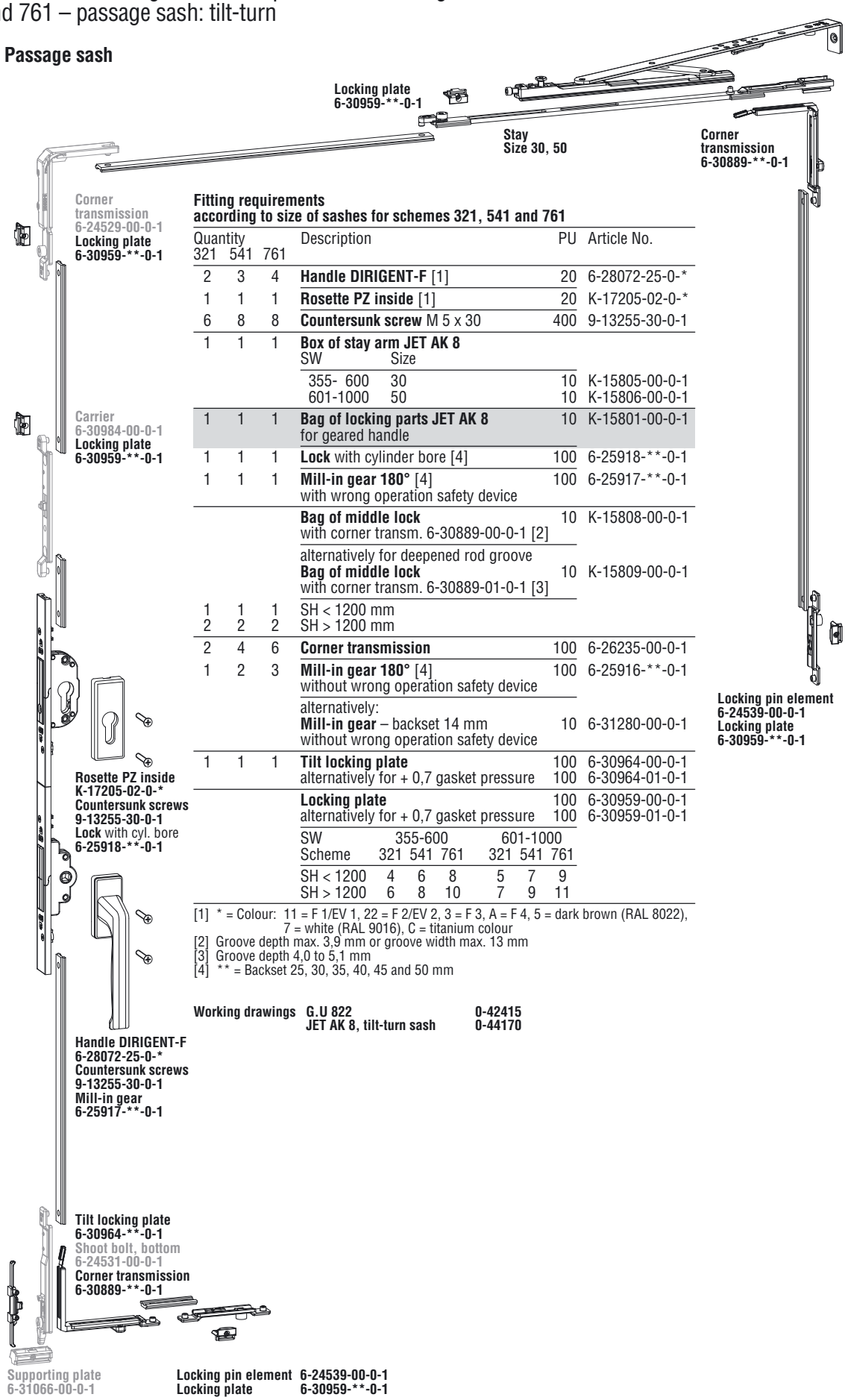

Fitting requirements
according to size of sashes for schemes 321, 541 and 761

Quantity 321	541	761	Description	PU	Article No.
2	3	4	**Handle DIRIGENT-F** [1]	20	6-28072-25-0-*
1	1	1	**Rosette PZ inside** [1]	20	K-17205-02-0-*
6	8	8	**Countersunk screw** M 5 x 30	400	9-13255-30-0-1
1	1	1	**Box of stay arm JET AK 8**		
			SW / Size		
			355- 600 / 30	10	K-15805-00-0-1
			601-1000 / 50	10	K-15806-00-0-1
1	1	1	**Bag of locking parts JET AK 8** for geared handle	10	K-15801-00-0-1
1	1	1	**Lock** with cylinder bore [4]	100	6-25918-**-0-1
1	1	1	**Mill-in gear 180°** [4] with wrong operation safety device	100	6-25917-**-0-1
			Bag of middle lock with corner transm. 6-30889-00-0-1 [2]	10	K-15808-00-0-1
			alternatively for deepened rod groove **Bag of middle lock** with corner transm. 6-30889-01-0-1 [3]	10	K-15809-00-0-1
1	1	1	SH < 1200 mm		
2	2	2	SH > 1200 mm		
2	4	6	**Corner transmission**	100	6-26235-00-0-1
1	2	3	**Mill-in gear 180°** [4] without wrong operation safety device	100	6-25916-**-0-1
			alternatively: **Mill-in gear** – backset 14 mm without wrong operation safety device	10	6-31280-00-0-1
1	1	1	**Tilt locking plate**	100	6-30964-00-0-1
			alternatively for + 0,7 gasket pressure	100	6-30964-01-0-1
			Locking plate	100	6-30959-00-0-1
			alternatively for + 0,7 gasket pressure	100	6-30959-01-0-1

SW	355-600			601-1000		
Scheme	321	541	761	321	541	761
SH < 1200	4	6	8	5	7	9
SH > 1200	6	8	10	7	9	11

[1] * = Colour: 11 = F 1/EV 1, 22 = F 2/EV 2, 3 = F 3, A = F 4, 5 = dark brown (RAL 8022), 7 = white (RAL 9016), C = titanium colour
[2] Groove depth max. 3,9 mm or groove width max. 13 mm
[3] Groove depth 4,0 to 5,1 mm
[4] ** = Backset 25, 30, 35, 40, 45 and 50 mm

Working drawings **G.U 822** **0-42415**
JET AK 8, tilt-turn sash **0-44170**

Windows and patio doors with mill-in gear for sash profiles with euro groove 15/20 mm
Schemes 431 and 651 – passage sash: tilt-turn

Folding sash

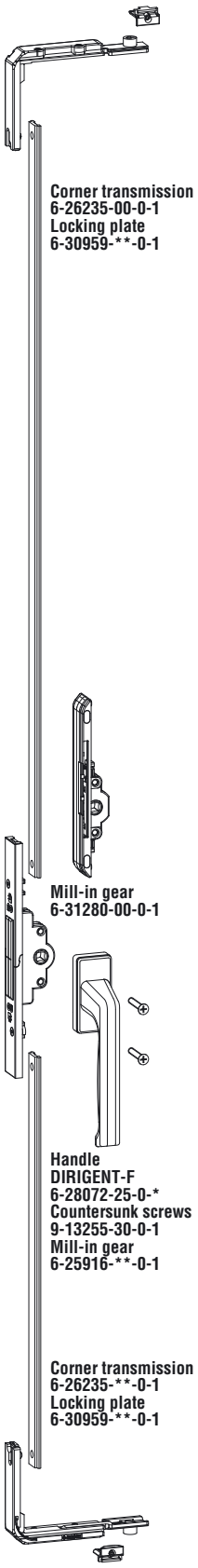

Passage sash

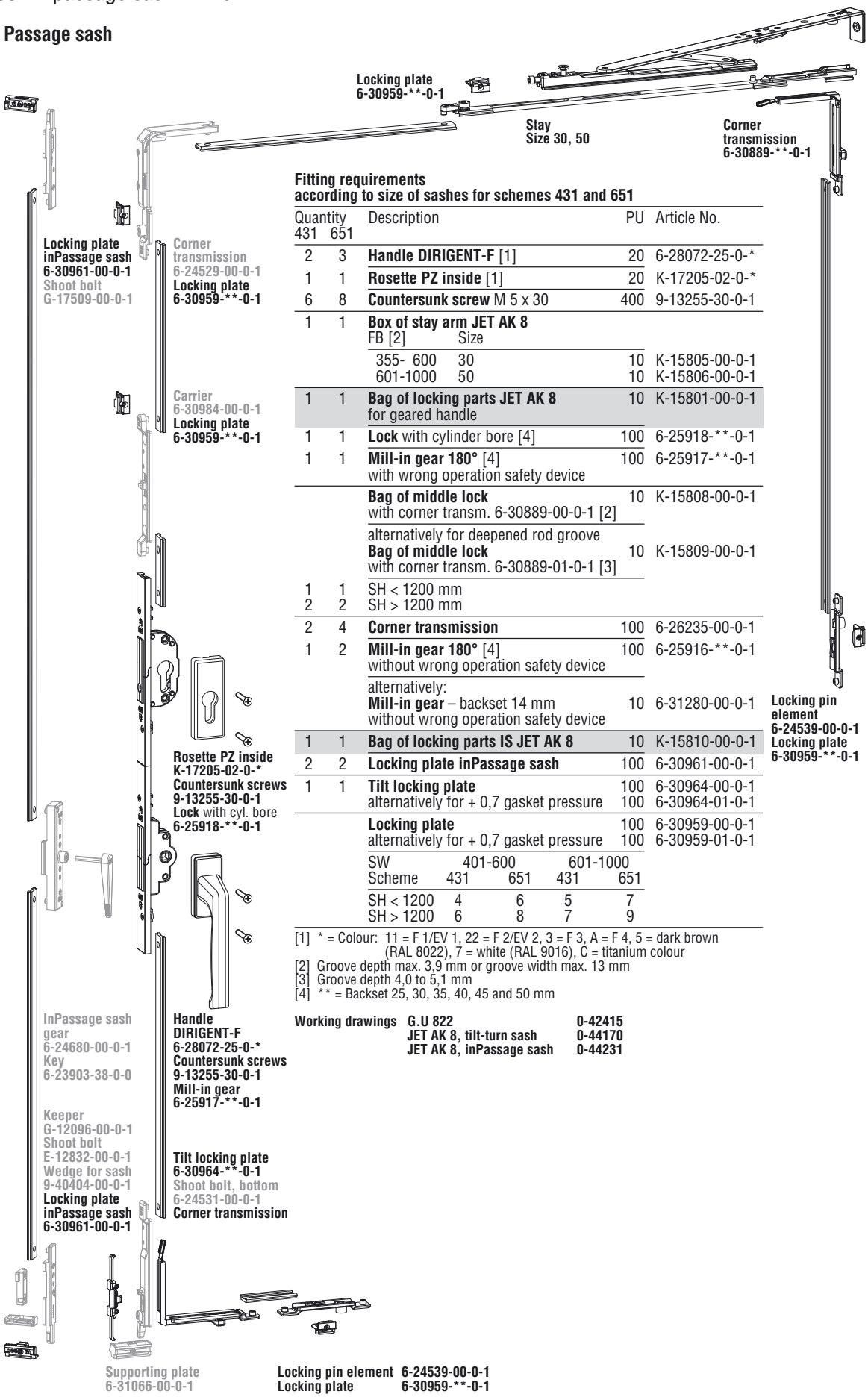

Fitting requirements
according to size of sashes for schemes 431 and 651

Quantity 431	Quantity 651	Description	PU	Article No.
2	3	**Handle DIRIGENT-F** [1]	20	6-28072-25-0-*
1	1	**Rosette PZ inside** [1]	20	K-17205-02-0-*
6	8	**Countersunk screw** M 5 x 30	400	9-13255-30-0-1
1	1	**Box of stay arm JET AK 8** FB [2] Size		
		355- 600 30	10	K-15805-00-0-1
		601-1000 50	10	K-15806-00-0-1
1	1	**Bag of locking parts JET AK 8** for geared handle	10	K-15801-00-0-1
1	1	**Lock** with cylinder bore [4]	100	6-25918-**-0-1
1	1	**Mill-in gear 180°** [4] with wrong operation safety device	100	6-25917-**-0-1
		Bag of middle lock with corner transm. 6-30889-00-0-1 [2]	10	K-15808-00-0-1
		alternatively for deepened rod groove **Bag of middle lock** with corner transm. 6-30889-01-0-1 [3]	10	K-15809-00-0-1
1	1	SH < 1200 mm		
2	2	SH > 1200 mm		
2	4	**Corner transmission**	100	6-26235-00-0-1
1	2	**Mill-in gear 180°** [4] without wrong operation safety device	100	6-25916-**-0-1
		alternatively: **Mill-in gear** – backset 14 mm without wrong operation safety device	10	6-31280-00-0-1
1	1	**Bag of locking parts IS JET AK 8**	10	K-15810-00-0-1
2	2	**Locking plate inPassage sash**	100	6-30961-00-0-1
1	1	**Tilt locking plate**	100	6-30964-00-0-1
		alternatively for + 0,7 gasket pressure	100	6-30964-01-0-1
		Locking plate	100	6-30959-00-0-1
		alternatively for + 0,7 gasket pressure	100	6-30959-01-0-1

SW	401-600		601-1000	
Scheme	431	651	431	651
SH < 1200	4	6	5	7
SH > 1200	6	8	7	9

[1] * = Colour: 11 = F 1/EV 1, 22 = F 2/EV 2, 3 = F 3, A = F 4, 5 = dark brown (RAL 8022), 7 = white (RAL 9016), C = titanium colour
[2] Groove depth max. 3,9 mm or groove width max. 13 mm
[3] Groove depth 4,0 to 5,1 mm
[4] ** = Backset 25, 30, 35, 40, 45 and 50 mm

Working drawings

G.U 822	**0-42415**
JET AK 8, tilt-turn sash	**0-44170**
JET AK 8, inPassage sash	**0-44231**

Windows and patio doors with mill-in gear for sash profiles with euro groove 15/20 mm
Schemes 330, 532, 550, 633, 743 and 770 – passage sash: side hung

Folding sash | **Passage sash**

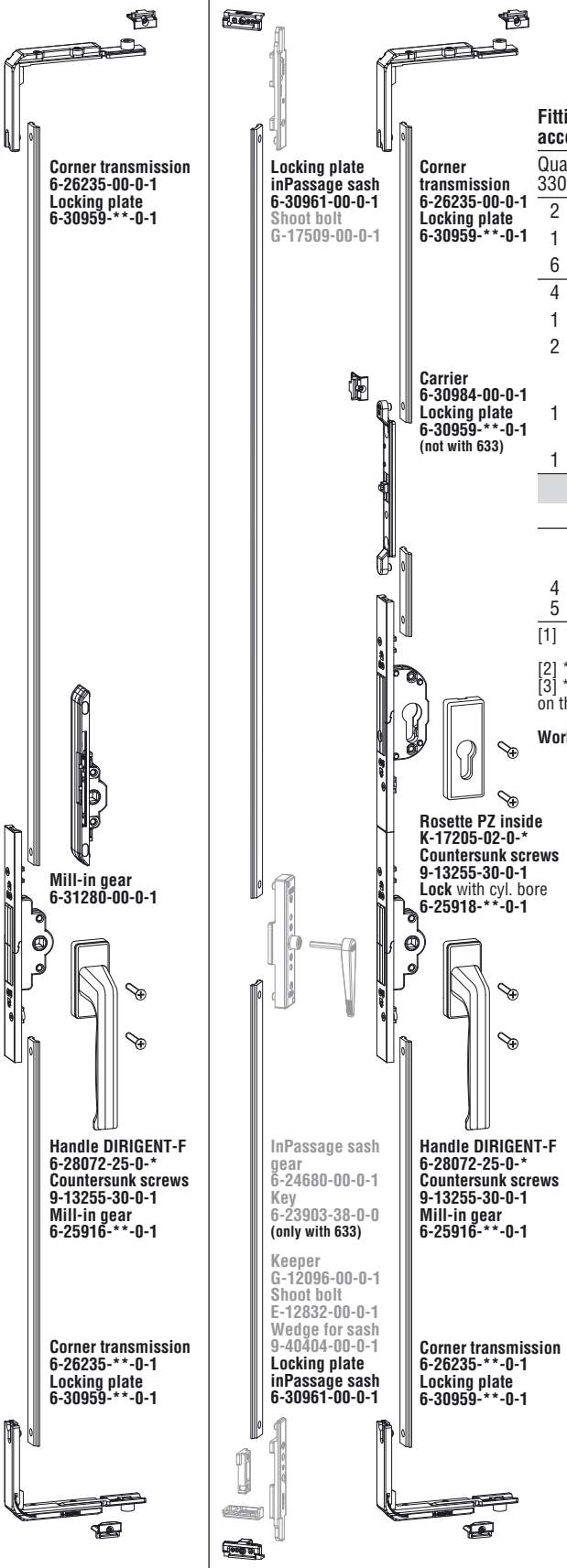

Fitting requirements
according to size of sashes for schemes 330, 532, 550, 633, 743 and 770

Quantity 330	532	550	633	743	770	Description	PU	Article No.
2	3	3	3	4	4	**Handle DIRIGENT-F** [1]	20	6-28072-25-0-*
1	1	1	1	1	1	**Rosette PZ inside** [1]	20	K-17205-02-0-*
6	8	8	8	10	10	**Countersunk screw** M 5 x 30	400	9-13255-30-0-1
4	6	6	6	8	8	**Corner transmission**	100	6-26235-00-0-1
1	1	1	1	1	1	**Carrier** up to SH 1200 mm	100	6-30984-00-0-1
2	3	3	3	4	4	**Mill-in gear 180°** [2] without wrong operation safety device	100	6-25916-**-0-1
1	2	2	2	3	3	alternatively at Folding sash: **Mill-in gear** – backset 14 mm [3] without wrong operation safety device	10	6-31280-00-0-1
1	1	1	1	1	1	**Lock** with cylinder bore [4]	100	6-25918-**-0-1
			1			**Bag of locking parts IS JET AK 8**	10	K-15810-00-0-1
			2			**Locking plate inPassage sash**	100	6-30961-00-0-1
						Locking plate	100	6-30959-00-0-1
						alternatively for + 0,7 gasket pressure	100	6-30959-01-0-1
4	6	6	6	8	8	SH < 1200 mm		
5	7	7	7	9	9	SH > 1200 mm		

[1] * = Colour: 11 = F 1/EV 1, 22 = F 2/EV 2, 3 = F 3, A = F 4, 5 = dark brown (RAL 8022), 7 = white (RAL 9016), C = titanium colour
[2] ** = Backset 25, 30, 35, 40, 45 and 50 mm
[3] ** = If on the folding sash mill-in gear 6-31280-00-0-1 is used, mill-in gear 180° 6-25916-**-0-1 is used on the passage sash only.

Working drawings **G.U 822** **0-42415**
JET AK 8, side hung sash **0-44231**

Windows and patio doors inward opening – bottom running – sash profiles with euro groove 15/20 mm

End cap 9-32532-00-0-*
Gliding rail P 1381
Cover rail P 1226

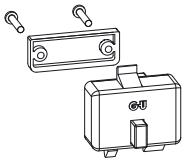

Folding catch
Packing
Spax cylinder screw

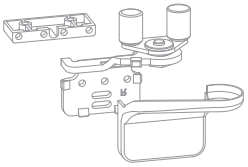

Support
9-33628-08-0-0
Gliding roller
6-25336-00-0-1
Corner bearing
9-33448-00-R-1
Cover
9-33449-00-R-*

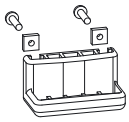

Support
Fillister head screws
Square nut

Fitting requirements according to size of sashes

Quantity 321	330	431	541	550	532	651	633	761	770	743	Description	PU	Article No.
1	1	1	2	2	2	2	2	3	3	3	**Basic box G.U-822** [1]	1	K-13861-08-0-*
											Contents		
											1 Runner, 1 Gliding roller, 1 Corner bearing, lh, 1 Corner bearing, rh, 1 Cover, lh, 1 Cover, rh, 2 Support		
1	2	2	3	4	3	4	4	5	6	5	**Box of sash hinge G.U-822/825**		
											17/40	1	K-13205-01-0-1
											17/45	1	K-13205-03-0-1
											25/45	1	K-13812-00-0-1
											17/17	1	K-13813-00-0-1
											Contents		
											3 Sash hinge long, 3 Sash hinge short, 3 Hinge pin		
1	2	2	3	4	3	4	4	5	6	5	**Bag of covers G.U-822/825** [1]		
											for sash hinge 17/40, 17/45	1	K-15392-00-0-*
											for sash hinge 25/45	1	K-15399-00-0-*
											for sash hinge 17/17	1	K-15393-00-0-*
											Contents		
											3 Cover long, 3 Cover short		
6 [3]	3	6 [3]	6 [3]	3	6	6 [3]	6	6 [3]	3	6	**Box of axial hinge**, 127 mm – 3-part [2] Frame groove 14/18, 12/15, 10/14	100	G-46731-00-0-*
											alternatively: **Box of axial hinge**, 93 mm – 3-part [2] Frame groove 14/18	50	K-15887-00-0-*
1	1	1	1	1	1	1	1	1	1	1	**Bag of profiles G.U-822** [1]		
											Contents		
											1 Running rail P 1213, 1 Gliding rail P 1381, 1 Cover rail P 1226, 2 End cap		
											TFW mm		
											-2960	1	K-13206-30-0-*
											2961-3960	1	K-13206-40-0-*
											3961-5000	1	K-13206-50-0-*
											5001-6700	1	K-13206-67-0-*
–	1	1	–	1	1	1	2	–	1	1	**Bag of folding catch G.U-822/825** [1]	1	K-13334-00-0-*
											Contents		
											1 Folding catch, 1 Support, 2 Spax cylinder screw 5 x 30, 2 Fillister head screws M 5 x 20, 2 Square nut M 5		
–	1	1	–	1	1	1	2	–	1	1	**Packing** for folding catch [1]	1	9-33492-00-0-*

[1] * = Colour: 1 = F 1/EV 1, 2 = F 2/EV 2, 3 = brass colour, 4 = UC 3, 5 = UC 5, 7 = white (RAL 9016)
[2] * = Colour: 0 = uncoated, 1 = F 1/EV 1, 5 = UC 5, 6 = black (RAL 9005), 7 = white (RAL 9016), 7T = white (RAL 9010)
[3] If the passage sash is tilt-turn (instead of side hung), 3 boxes of axial hinge less are required.

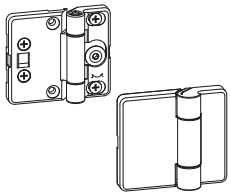

Sash hinge long
Sash hinge short
Hinge pin
Cover long
Cover short

Box of axial hinge
127 mm – 3-part

Box of axial hinge
93 mm – 3-part

Working drawing 0-42415

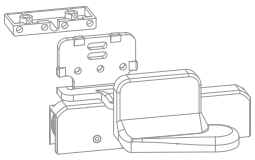

Support
9-33628-08-0-0
Corner bearing
9-33448-00-L-1
Runner
6-25334-00-0-*
Cover
9-33449-00-L-*

Running rail P 1213

Windows and patio doors inward opening – top running – sash profiles with euro groove 15/20 mm

End cap, lh 9-32740-00-L-*
Cover rail P 1391
Running rail P 1213

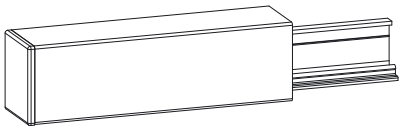

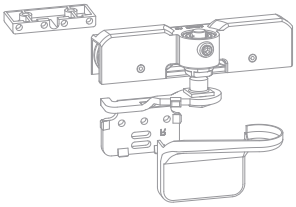

Support
9-33628-08-0-0
Runner
6-25436-00-0-*
Corner bearing
9-33448-00-L-1
Cover
9-33449-00-L-*

Support
9-32741-00-0-0

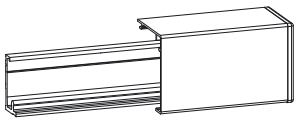

Running rail P 1213
Cover rail P 1391
End cap, rh 9-32740-00-R-*

Fitting requirements according to size of sashes

Quantity 321	330	431	541	550	532	651	633	761	770	743	Description	PU	Article No.
1	1	1	2	2	2	2	2	3	3	3	**Basic box G.U-825** [1] Contents 1 Runner, 1 Gliding roller 1 Corner bearing, lh, 1 Corner bearing, rh 1 Cover, lh, 1 Cover, rh 2 Support	1	K-13982-08-0-*
1	2	2	3	4	3	4	4	5	6	5	**Box of sash hinge G.U-822/825**		
											17/40	1	K-13205-01-0-1
											17/45	1	K-13205-03-0-1
											25/45	1	K-13812-00-0-1
											17/17	1	K-13813-00-0-1
											Contents 3 Sash hinge long, 3 Sash hinge short 3 Hinge pin		
1	2	2	3	4	3	4	4	5	6	5	**Bag of covers G.U-822/825** [1]		
											for sash hinge 17/40, 17/45	1	K-15392-00-0-*
											for sash hinge 25/45	1	K-15399-00-0-*
											for sash hinge 17/17	1	K-15393-00-0-*
											Contents 3 Cover long, 3 Cover short		
6 [3]	3	6 [3]	6 [3]	3	6	6 [3]	6	6 [3]	3	6	**Box of axial hinge**, 127 mm – 3-part [2] Frame groove 14/18, 12/15, 10/14	100	G-46731-00-0-*
											alternatively: **Box of axial hinge**, 93 mm – 3-part [2] Frame groove 14/18	50	K-15887-00-0-*
1	1	1	1	1	1	1	1	1	1	1	**Bag of profiles G.U-825** [1] Contents 1 Running rail P 1213 1 Gliding rail P 1381 1 Cover rail P 1226 1 Cover rail P 1391 1 End cap, links 1 End cap, rechts 2 Support		
											TFW mm		
											-2960	1	K-13272-30-0-*
											2961-3960	1	K-13272-40-0-*
											3961-5000	1	K-13272-50-0-*
											5001-6700	1	K-13272-67-0-*
–	1	1	–	1	1	1	2	–	1	1	**Bag of folding catch G.U-822/825** [1] Contents 1 Folding catch, 1 Support 2 Spax cylinder screw 5 x 30 2 Fillister head screws M 5 x 20 2 Square nut M 5	1	K-13334-00-0-*
–	1	1	–	1	1	1	2	–	1	1	**Packing** for folding catch [1]	1	9-33492-00-0-*

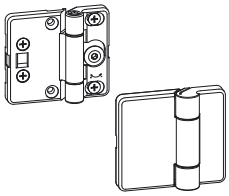

Sash hinge long
Sash hinge short
Hinge pin
Cover long
Cover short

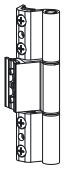

Box of axial hinge
127 mm – 3-part

Box of axial hinge
93 mm – 3-part

[1] * = Colour: 1 = F 1/EV 1, 2 = F 2/EV 2, 3 = brass colour, 4 = UC 3, 5 = UC 5, 7 = white (RAL 9016)
[2] * = Colour: 0 = uncoated, 1 = F 1/EV 1, 5 = UC 5, 6 = black (RAL 9005), 7 = white (RAL 9016), 7T = white (RAL 9010)
[3] If the passage sash is tilt-turn (instead of side hung), 3 boxes of axial hinge less are required.

Working drawing 0-42454

Gliding rail P 1381
Cover rail P 1226

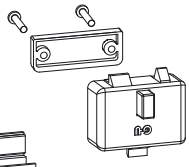

Spax cylinder screw
Packing
Folding catch

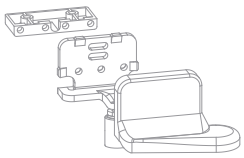

Support
9-33628-08-0-0
Corner bearing
9-33448-00-R-1
Gliding roller
6-25336-00-0-1
Cover
9-33449-00-R-*

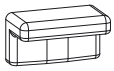

Fillister head screws
Square nut
Support

Gliding rail P 1381
Cover rail P 1226

Tilt-turn fittings

Tilt-turn passage sash

Fitting requirements for schemes 321, 431, 541, 651 and 761

Qty.	Description		PU	Article No.
1	**Bag of hinge side fittings** [1]			
	Frame groove	14/18	10	K-15800-00-0-*
		12/15	10	K-16668-00-0-*
		10/14	10	K-16667-00-0-*
	Contents			
	1 Stay arm bearing [1]			6-30875-00-0-*
	1 Stay arm bearing axle			6-30874-00-0-6
	1 Stay arm hinge [1]			6-31088-00-0-*
	1 Bearing sleeve			9-39805-00-0-6
	2 Covers			9-39807-00-0-6
	1 Corner bearing [1]			9-39812-00-0-*
	1 Casing for corner bearing	14/18		6-30872-00-0-1
		12/15		6-32056-00-0-1
		10/14		6-32055-00-0-1
	1 Corner bearing axle			6-31087-00-0-6
	1 Corner hinge [1]			6-31073-00-0-*
	1 Clamping angle			6-30873-00-0-1
	2 Countersunk screws			9-13489-12-R-8

[1] * = Colour: 0 = uncoated, 1 = F 1/EV 1, 6 = black (RAL 9005), 7 = white (RAL 9016), 7T = white (RAL 9010)

Optional part

Qty.	Description	PU	Article No.
1	**Bag of bearing sleeves/covers light grey** [1] for all bags of hinge side/middle hinge JET AK 8	1	K-17803-00-0-1
	Contents		
	1 Bearing sleeve		9-39805-00-0-1
	2 Covers		9-39807-00-0-1
	1 Corner bearing sleeve		9-39831-00-0-1
	1 Safety cover		9-39806-00-0-1

[1] * = Colour: 0 = uncoated, 1 = F 1/EV 1, 6 = black (RAL 9005), 7 = white (RAL 9016), 7T = white (RAL 9010)

Working drawings 0-44170

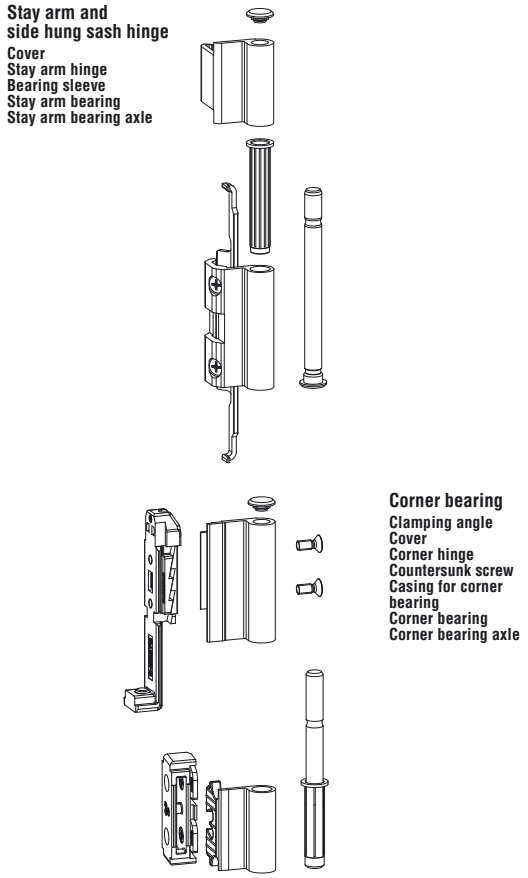

G.U-822, G.U-825

Application	Description	PU	Article No.
Assembly of corner bearing	Drilling jig for corner bearing	1	6-25831-01-0-9
Assembly of sash hinge, corner hinge	Drilling jig for sash hing 17/40 (K-13205-01)	1	6-25369-00-0-9
	Drilling jig for sash hing 17/45 (K-13205-03)	1	6-25996-03-0-0
	Drilling jig for sash hing 25/45 (K-13812-00)	1	6-25996-02-0-0
	Drilling jig for sash hing 17/17 (K-13813-00)	1	6-25996-01-0-0
	Rod for drilling jig 6-25369/6-25695	1	9-32596-00-0-3
	Stop for rod 9-32596	1	6-25371-00-0-9
Assembly of running rail and gliding rail	Drilling jig for running or gliding rail	1	6-23616-00-0-1
Assembly of folding catch	Drilling jig for folding catch	1	6-25575-00-0-9

Slide-fold fittings
for aluminium windows and patio doors

Application

Range of applications for G.U slide-fold fittings:
– Slide-fold doors with 3 to 7 sashes,
– Slide-fold windows with 3 to 7 sashes,
each with running and gliding rails.

Locking mechanisms

Slide-fold locking mechanisms, inward opening
The locking mechanisms for inward opening slide-fold windows and patio doors feature one handle operation. Gear side with carrier for geared handle or lockable mill-in gears with 25 to 50 mm backset prepared for the installation of a profile cylinder.
All locking parts are designed for fitting groove 16 mm. The locking pins of locking mechanism and corner transmissions are adjustable. The clampable locking plates are adjustable to allow for optimum gasket pressure.
From sash heights over 851 mm , middle locks are used. Corner transmissions are provided with rust-proof 4-leaf stainless steel springs.
SRW 401-1000 mm
SRH 851-2350 mm

Runner, profiles and hinges

Slide-fold fittings G.U-822
Bottom running fittings for single sashes up to 80 kg, with 4-wheel carriages, adjustable for various sash overlap dimensions, height adjustable + 4 mm or - 1.5 mm. Wheels made of fabric reinforced laminated plastic with ball bearing. Sash weight up to 80 kg

Slide-fold fittings G.U-825
Top running fittings for single sashes up to 80 kg, with 4-wheel carriages, adjustable for various sash overlap dimensions, height adjustable + 4 mm or - 1.5 mm. Wheels made of fabric reinforced laminated plastic with ball bearing. Sash weight up to 80 kg

Locking plates

Frame profile specific locking plates according to table (see at the end of this catalogue chapter).

Drilling jigs, positioning jigs

Drilling jigs and other tools for hardware assembly are to be found at the end of this catalogue chapter and also in the respective working drawings.

Turn handles DIRIGENT [1]

The handles are made of aluminium with concealed fixings. The rosettes have a robust retention feature and fixed cams. Lockable handles and handles for operation from both sides complete the programme.

Standard colours:

F 1/EV 1	silver colour
F 2/EV 2	new silver colour
F 3	gold colour
F 4	light brown
dark brown	dark brown (RAL 8022)
black	black (RAL 9005)
white	white (RAL 9016 or RAL 9010)

[1] More turn handles see part 3 of the present order catalogue.

Standard handles

Standard version for slide-fold fittings G.U-822 and G.U-825 with gear 15 or lockable gear with cylinder bore: handle DIRIGENT-F.

Running rail P 1213

Aluminium running rail, suitable for use with slide-Folding sashes with standard and special fittings.

Gliding rail P 1381

Aluminium gliding rail, suitable for use with slide-Folding sashes (top guide).

Standard colours

Slide-fold fittings are supplied in the following standard colours:

EV 1	Visible aluminium parts anodized EV 1, cover profiles grey
UC 3	Visible aluminium parts anodized middle bronze, cover profiles middle brown
UC 5	Visible aluminium parts anodized dark bronze, cover profiles dark brown
white	Visible aluminium parts anodized EV 1, cover profiles white

Further colours and finishes on request.

Curved slide-fold units

If slide-fold units are arranged along a curved ground plan, the circle diametre must be 8 m at the minimum. Special guidelines of profile manufacturers have to be observed.

Materials, surface sealing fer**GU**ard*silver

The fitting parts are made of high quality steel, zinc die-casting or aluminium alloys.
Depending on the material, they are protected against corrosion by surface sealing with fer**GU**ard*silver or by anodisation (aluminium parts).

Standard surface sealing of slide-fold fittings: fer**GU**ard*silver

Locking components of slide-fold come with the surface sealing fer**GU**ard*silver.

Abbreviations

CB	Cylinder bore
FRW	Frame rebate width
G	Fixed gear position
lh	left hand
ML	Middle lock
PU	Packing unit
rh	right hand
SRH	Sash rebate height
SRW	Sash rebate width
ST	Sash thickness
TFW	Total frame width

Profile system manufacturers' information

It is important to observe the product information issued by the profile system manufacturers, especially information concerning construction and fabrication, maximum sash dimensions and weights and material features such as linear expansion of profiles.

Slide-fold fittings
for aluminium windows and patio doors

Profile systems with 16 mm fitting groove

Profile manufacturer	Profile system	Sash overlap mm	Groove position mm	Fitting groove [1] undercut/plane	Frame groove	Frame groove Dim. A	Frame groove Dim. B
Alco	Alousystem 550	20,0	13,0	U	14/18	1,5	4,0
Almaco		18,0	9,0	U	14/18		
Alumil	M 11000 M 11500 M 20000	18,0 18,0 18,0	9,0 9,0 9,0	U U U	14/18 14/18 14/18	1,5 1,5 1,5	3,5 3,5 3,5
Aluminco		20,0	9,0	U	14/18	1,5	3,5
Domal	Bright PA70S	18,0	9,0	U	14/18	1,5	3,5
Elvial	4300 4600 5400 5600 5700	18,0 18,0 18,0 18,0 18,0	9,0 9,0 9,0 9,0 9,0	U U U U U	14/18 14/18 14/18 14/18 14/18	1,5 1,5 1,5 1,5 1,5	4,0 4,0 4,0 4,0 4,0
Europa	5000	18,0	9,0	U	14/18	1,5	3,5
Etem	E40	20,0	9,0	U	14/18	2,0	4,0
Exalco	Albio 109C	18,0	9,0	U	14/18	1,3	3,9
Heroal	065 / 065i / 065f 090 / 090S 110 ES	18,0 18,0 18,0	9,0 9,0 9,0	U U U	10/14 10/14 10/14	2,0 2,0 2,0	4,3 4,3 4,3
Kawneer	Kalory	20,0	9,0	U	10/14		4,0
Nordall	78TTF	18,0	9,0	U	14/18	1,5	3,5
Ponzio	Windstop 55TT	18,0	9,0	U	14/18	2,0	4,0
TS-Aluminium	65	18,0	9,0	P	14/18	2,0	4,0

[1] U = undercut, P = plane

Slide-fold fittings
for aluminium windows and patio doors

Sash arrangement according to schemes 321 to 651
with tilt-turn or side hung passage sash

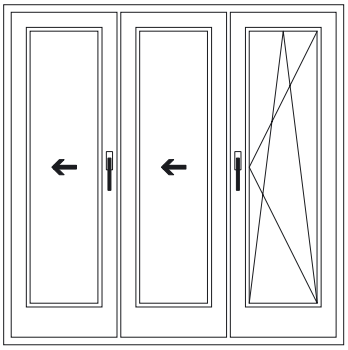

Scheme 321 [1]
2 slide-Folding sashes,
1 tilt-turn sash

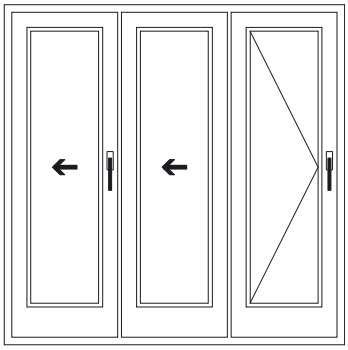

Scheme 330
2 slide-Folding sashes,
1 side hung sash

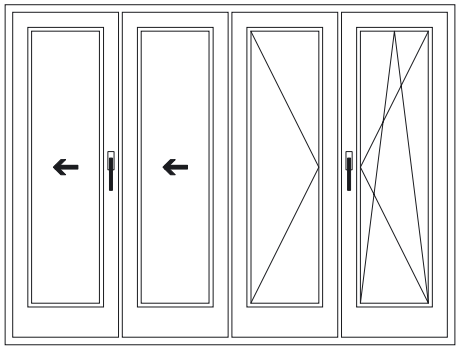

Scheme 431 [1]
2 slide-Folding sashes,
1 inactive side hung sash, 1 tilt-turn sash

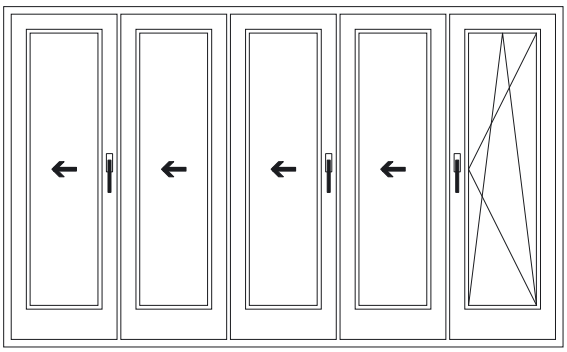

Scheme 541 [1]
4 slide-Folding sashes,
1 tilt-turn sash

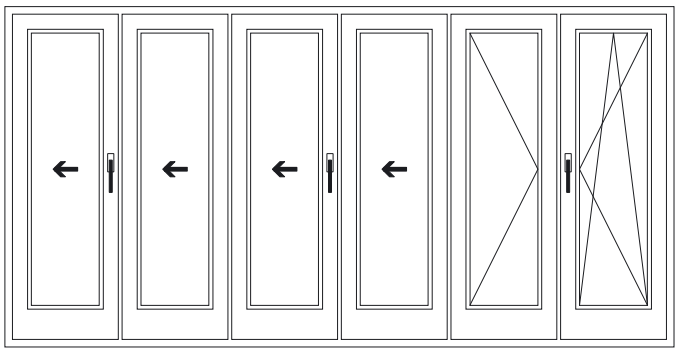

Scheme 651 [1]
4 slide-Folding sashes,
1 inactive side hung sash, 1 tilt-turn sash

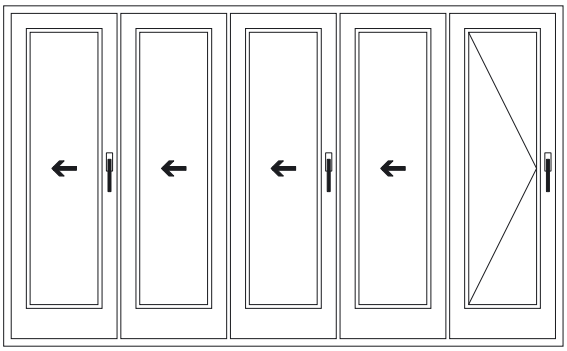

Scheme 550
4 slide-Folding sashes,
1 side hung sash

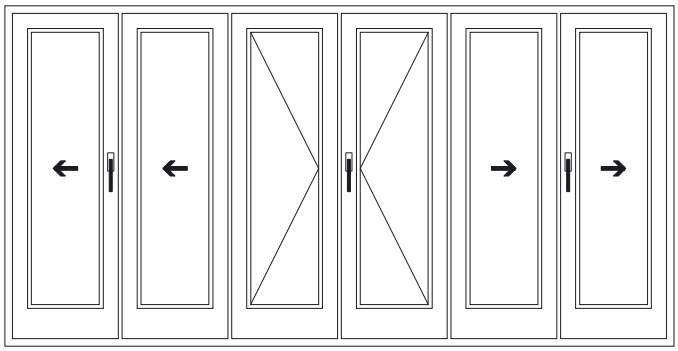

Scheme 633
4 slide-Folding sashes,
1 inactive side hung sash, 1 side hung sash

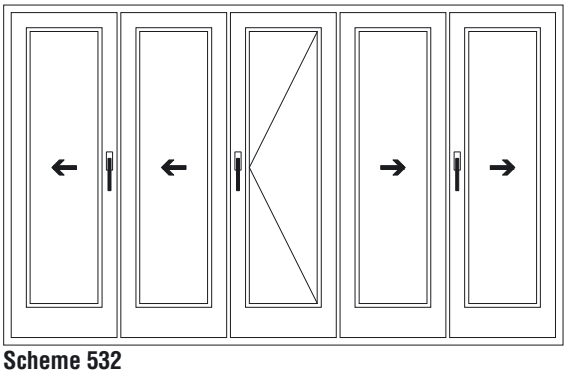

Scheme 532
4 slide-Folding sashes,
1 side hung sash

Legend:

[1] Passage sash also as side hung sash
– with sash hinges and UNI-JET side hung locking mechanism

Slide-fold fittings
for aluminium windows and patio doors

Sash arrangement according to schemes 743 to 770
with tilt-turn or side hung passage sash

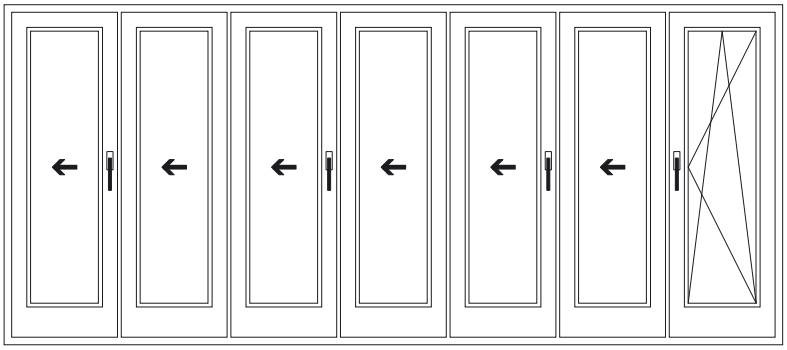

Scheme 761 [1]
6 slide-Folding sashes,
1 tilt-turn sash

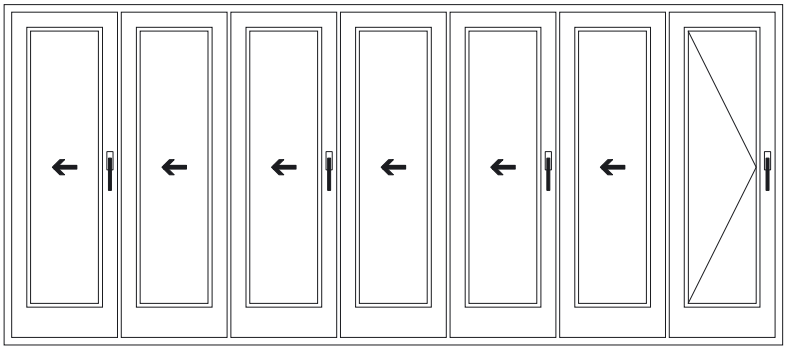

Scheme 770
6 slide-Folding sashes,
1 side hung sash

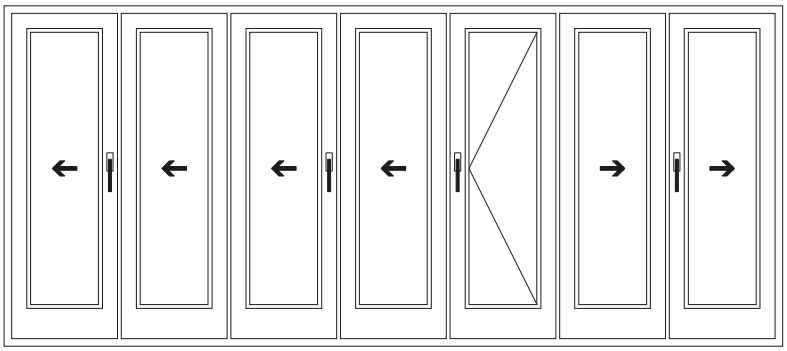

Scheme 743
6 slide-Folding sashes,
1 side hung sash

Legend:

[1] Passage sash also as side hung sash
– with sash hinges and UNI-JETside hung locking mechanism

Assembly dimensions – frame and sash profile

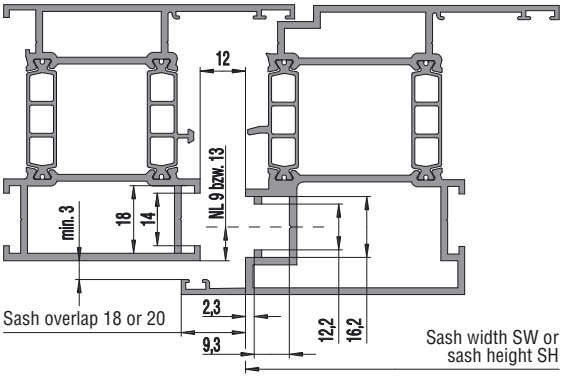

Frame and sash profile
Sash with undercut fitting groove 16 mm – groove position 9 or 13 mm
Frame groove 14/18

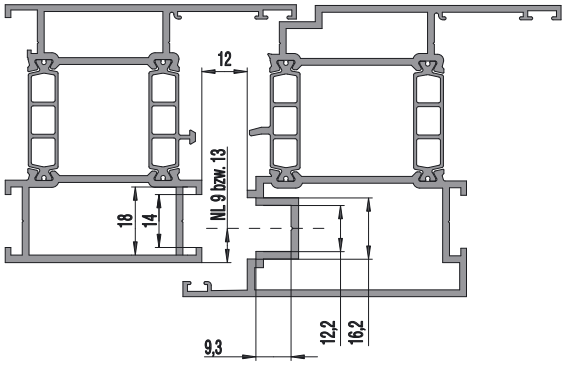

Frame and sash profile
Sash with plane fitting groove 16 mm – groove position 9 or 13 mm
Frame groove 14/18

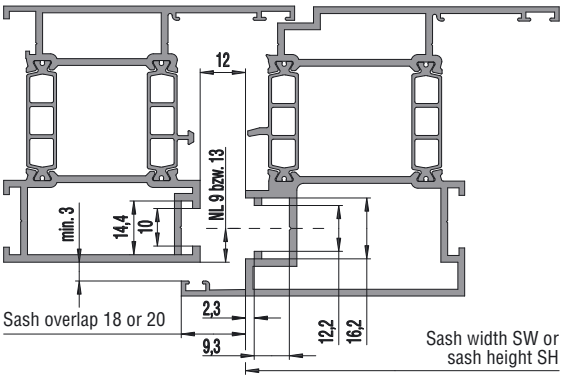

Frame and sash profile
Sashes with undercut fitting groove 16 mm – groove position 9 or 13 mm
Frame groove 10/14

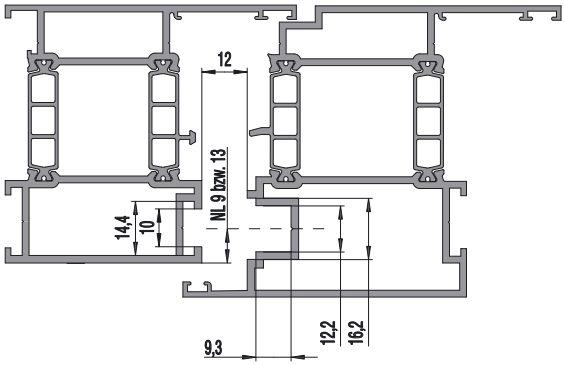

Frame and sash profile
Sashes with plane fitting groove 16 mm – groove position 9 or 13 mm
Frame groove 10/14

Assembly dimensions – gliding rails, running rails, runners, hinges

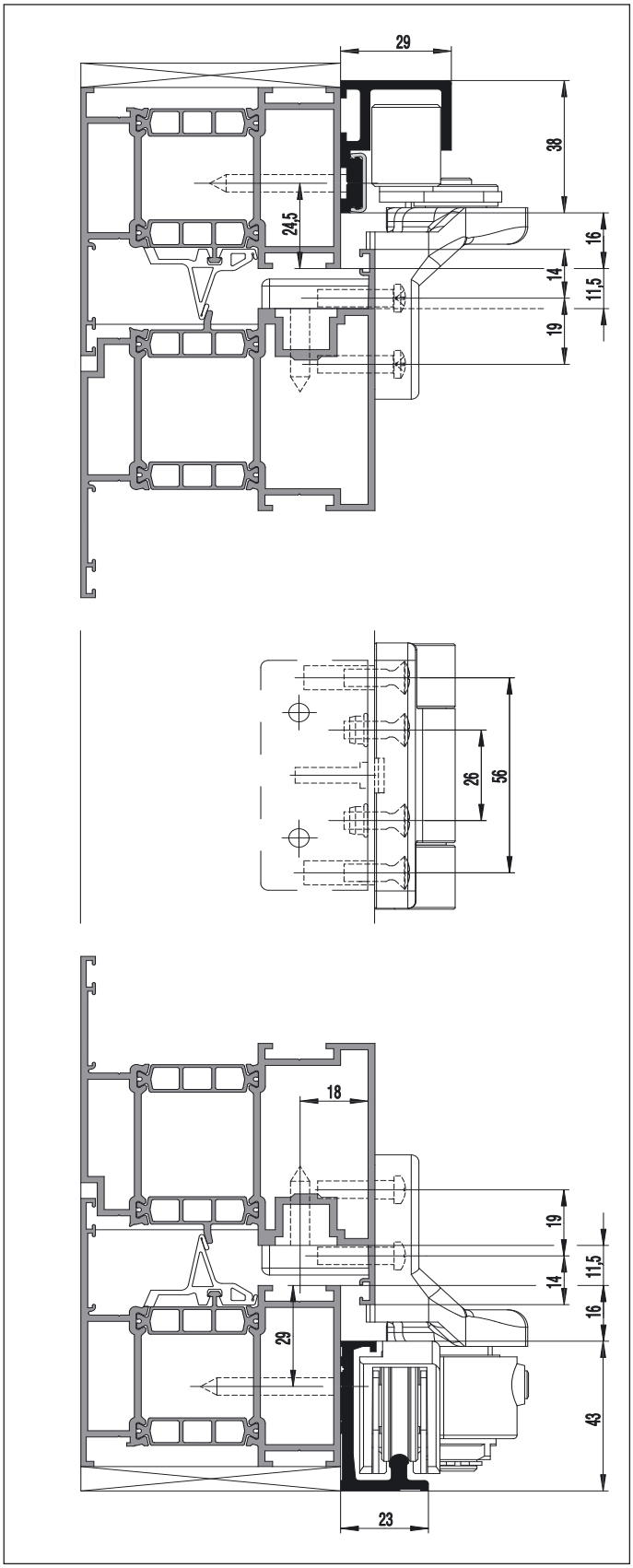

Slide-fold fittings G.U-822

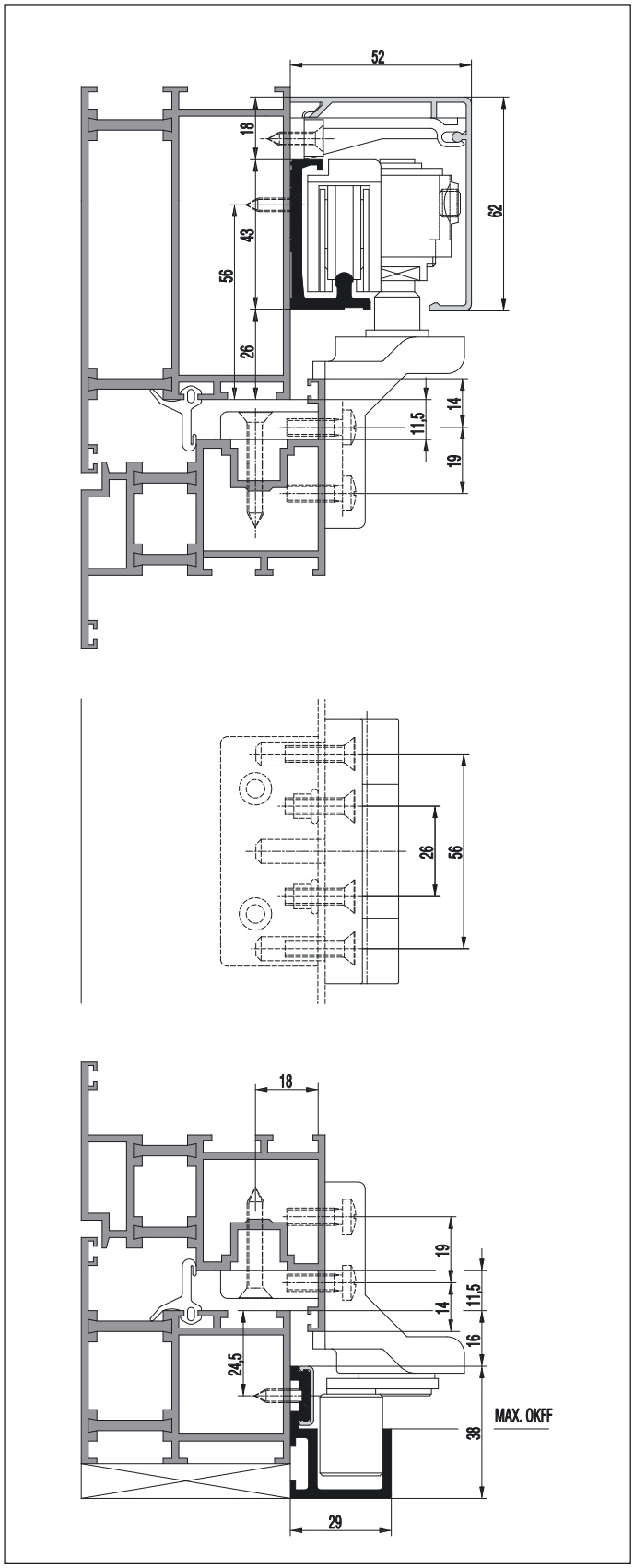

Slide-fold fittings G.U-825

Drilling and milling dimensions

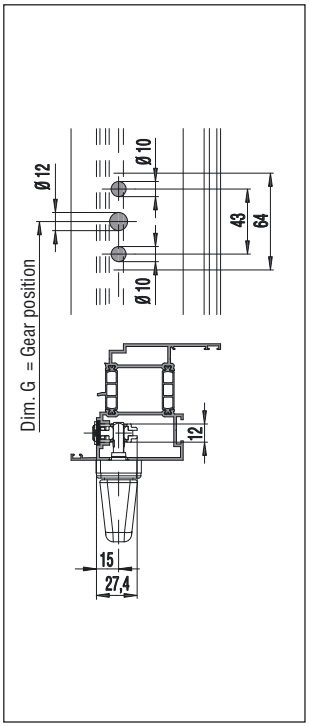

Dimensions for handles DIRIGENT
Drilling jig 6-22459-00-0-0
Stop 9-27406-00-0-1

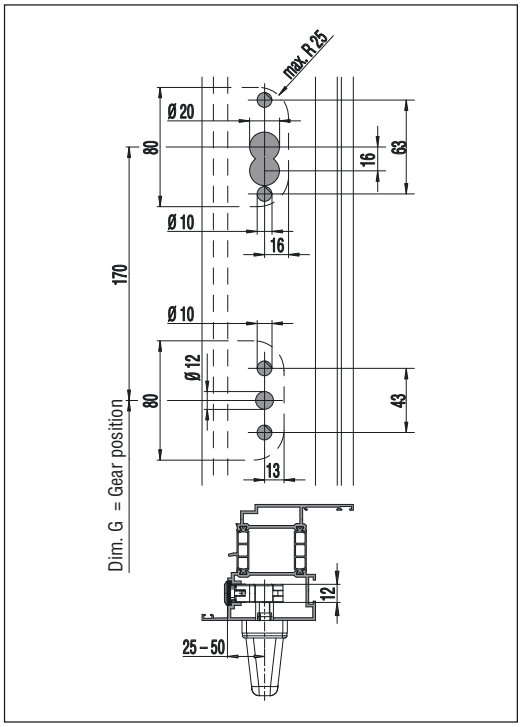

Dimensions for gears AP 25 up to AP 50
Drilling jig with stop 6-25156-00-0-9

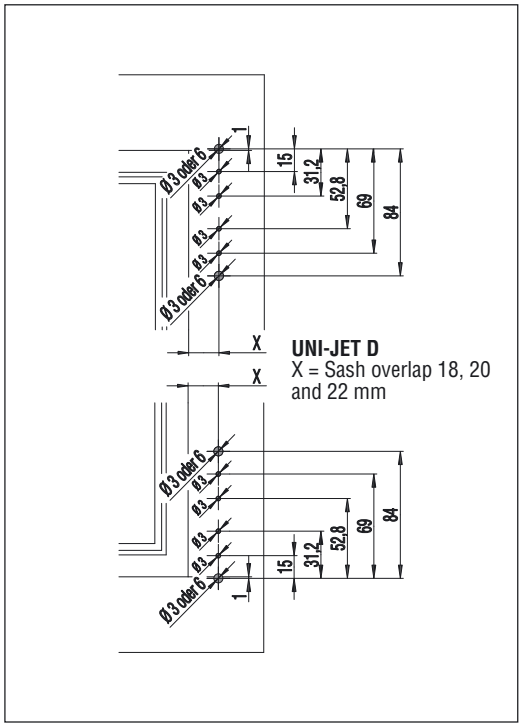

Dimensions for stay arm bearing and corner bearing UNI-JET D
Drilling jig, drill Ø 3 mm 6-27412-03-0-0
Drilling jig, drill Ø 3 mm and 6 mm 6-27412-53-0-0

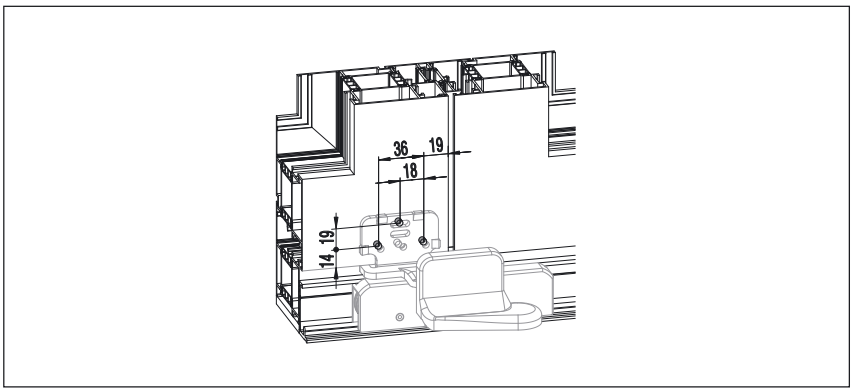

Dimensions corner bearing
Drilling jig 6-25831-01-0-9

Handles DIRIGENT-F [1]

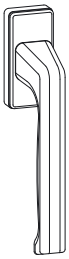

DIRIGENT-F
Spindle 25 6-28072-25-0-*
Spindle 29 6-28072-29-0-*

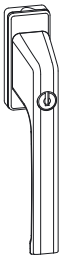

DIRIGENT-F/Z
with push button cylinder, all keys alike
Spindle 29 6-28075-29-0-*

DIRIGENT-F/F flat
6-28101-00-0-*

MODENA-F/Z 100 Nm [2]
for security windows and patio doors
Spindle 29 6-34397-29-0-*

DIRIGENT-F/SG
Spindle 50 8-00694-50-0-7

Rosette/F inside – flat
6-24913-00-0-*

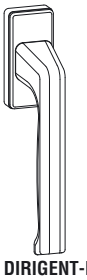

DIRIGENT-F
inside – without spindle
6-28072-00-0-*

DIRIGENT-F/AF,
outside – flat
6-25223-00-0-*

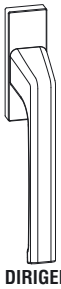

DIRIGENT-F/A,
outside
6-25993-00-0-*

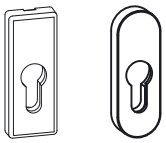

Rosette with CB inside
square K-17205-02-0-*
oval K-17204-02-0-*

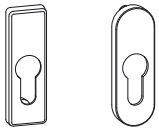

Rosette PZ/A outside
square 9-43605-02-0-*
oval 9-43582-02-0-*

Spindle
ST 56-68 9-26874-56-0-1
ST 69-80 9-26874-69-0-1

Inside/ outside operation
Countersunk screw M 5
ST 50-54 9-13255-60-0-1
ST 55-59 9-13255-65-0-1
ST 60-64 9-13255-70-0-1
ST 65-69 9-13255-75-0-1
ST 70-74 9-13255-80-0-1
ST 75-80 9-13255-85-0-1

Inside operation
Countersunk screw M 5
Spindle 25 9-13255-30-0-1
Spindle 29 9-13255-35-0-1

Knob lock
Backset 25 - 50 mm
K-13282-00-0-*

Pull handle outside
9-22921-00-0-*

[1] = More turn handles see part 3 of the present order catalogue.
[2] = Tested to DIN V EN V 1627 for resistance to pull-off and twist-off attempts at 100 Nm.

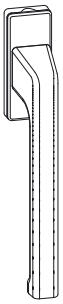

DIRIGENT-HL
elongated
Rosette 32 x 81 mm
Spindle 25 6-31382-25-0-*
Spindle 29 6-31382-29-0-*

DIRIGENT-HL
elongated
Rosette 32 x 81 mm
push button cylinder
Spindle 30 6-31383-30-0-*

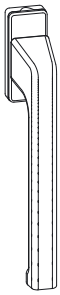

DIRIGENT-HL
elongated
Rosette 28 x 67 mm
Spindle 33 6-32629-33-0-*

G.U Face fixed window lock

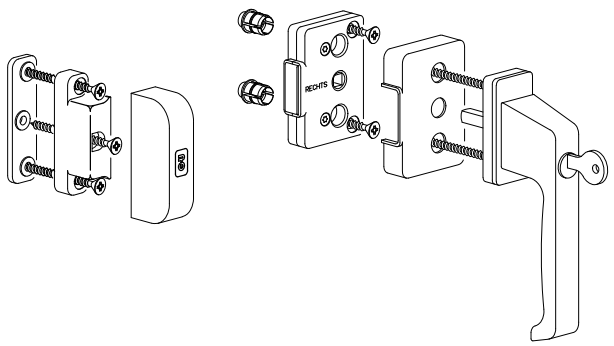

Box of face fixed window lock with turn handle DIRIGENT F/Z

EV 1	**K-14662-00-0-11**
dark brown	**K-14662-00-0-5**
white	**K-14662-00-0-7**

Contents of box

1 Turn handle DIRIGENT F/Z, lockable
1 Spindle 7 x 75 mm
1 Face fixed lock
1 Cover for face fixed lock
2 Sleeve for Ø 10 mm
2 Sleeve for Ø 12 mm
1 Strike box
1 Cover for strike box
1 Packing 3 mm
1 Packing 4 mm
1 Packing 5 mm
1 Packing 6 mm
7 Spax countersunk screw 5 x 55 mm

JET Slit ventilation catch

Slit ventilation catch

Cover

Catch plate

Fitting requirements JET Slit ventilation catch for aluminium windows

Quantity	Description	PU	Article No.
1	**JET Slit ventilation catch**, with sash overlap	10	K-12223-90-0-*
1	**JET Slit ventilation catch**, without sash overlap	10	K-12216-90-0-*
	Drilling jig	1	6-23861-00-0-0

Working drawing 0-38928

4

Slide-fold fittings G.U-825 at bottom in- and outside without threshold

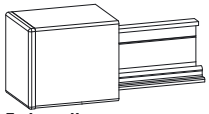

End cap lh
9-32740-00-L-*
Cover rail P 1391
Running rail P 1213

Support 9-32741

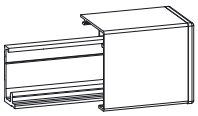

Running rail P 1213
Cover rail P 1391
End cap rh
9-32740-00-R-*

Gliding rail P 1410

Bag of profiles G.U-825
at bottom in- and outside without threshold

TFW mm	PU	Article No.
-2960	1	K-14679-30-0-*
2961-6700	1	K-14679-67-0-*

Locking plates according to frame groove

Description	Dim.	Length mm	Illustration	Groove position 9 Frame groove 14/18	Groove position 9 Frame groove 10/14	Groove position 13 Frame groove 14/18	Groove position 13 Frame groove 10/14
	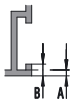			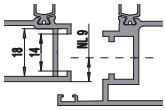	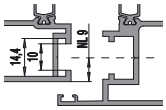	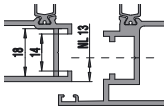	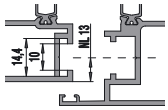
Standard locking plate Frame – zinc to clamp	A = 2,0 A = 1,5	55 55	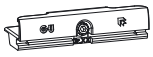	6-32628-00-0-1 6-32628-01-0-1	6-32628-00-0-1 6-32628-01-0-1	6-33278-00-0-1 6-33278-01-0-1	6-33278-00-0-1 6-33278-01-0-1
Standard locking plate Frame – zinc screw-on version	B = 4,0 B = 3,5	55 55 55		9-45219-14-0-1 9-45219-15-0-1	9-45219-10-0-1		
Mushroom locking plate Se Frame – steel	B = 4,0 B = 3,5	55 55 55		6-27674-48-0-1 6-27674-49-0-1	6-27674-62-0-1	6-33398-00-0-1	6-27831-44-0-1
Mushroom locking plate Ahs Frame – zinc to clamp	B = 4,0 B = 3,5	55 55 55	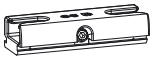	6-32225-14-0-1 6-32225-15-0-1	6-32225-10-0-1		
Locking plate for false mullion Fitting groove 16 mm – zinc		55	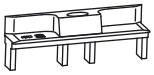	E-13534-12-0-1	E-13534-12-0-1	E-13534-12-0-1	E-13534-12-0-1
Locking plate for false mullion Se Fitting groove 16 mm – steel		55		6-27831-52-0-1	6-27831-52-0-1	6-27831-52-0-1	6-27831-52-0-1

Sash hinges and locking plates according to profile systems

Profile systems aluminium	Z-shaped sash profile	T-shaped sash profile	Frame profile	False mullion	Working drawing G.U-822	Box of sash hinges	Locking plate frame	Locking plate Se frame	Locking plate false mullion
Akotherm AT 615	1549	1511	1503	1508	0-42594-1	K-13205-03-0-1	6-25495-00-0-1		6-25495-00-0-1
Alsec 2000-Serie 59	56556-92		53194-80	53198-97	0-42547-1	K-13812-00-0-1	9-30146-13-0-1		9-30146-13-0-1
Forster Norm (Stahl)	32.635		32.357	32.642	0-43781-1	K-13205-01-0-1	9-30147-00-0-1	6-32207-18-0-1	9-30256-00-0-1
Forster Therm Clima (Stahl)	510.800		510.751	510.832	0-43776-1	K-13205-01-0-1	9-30147-00-0-1	6-32207-18-0-1	9-30256-00-0-1

Windows and patio doors with handle inside for sash profiles with fitting groove 16 mm
Schemes 321, 541 and 761 – passage sash: tilt-turn

Folding sash

Passage sash

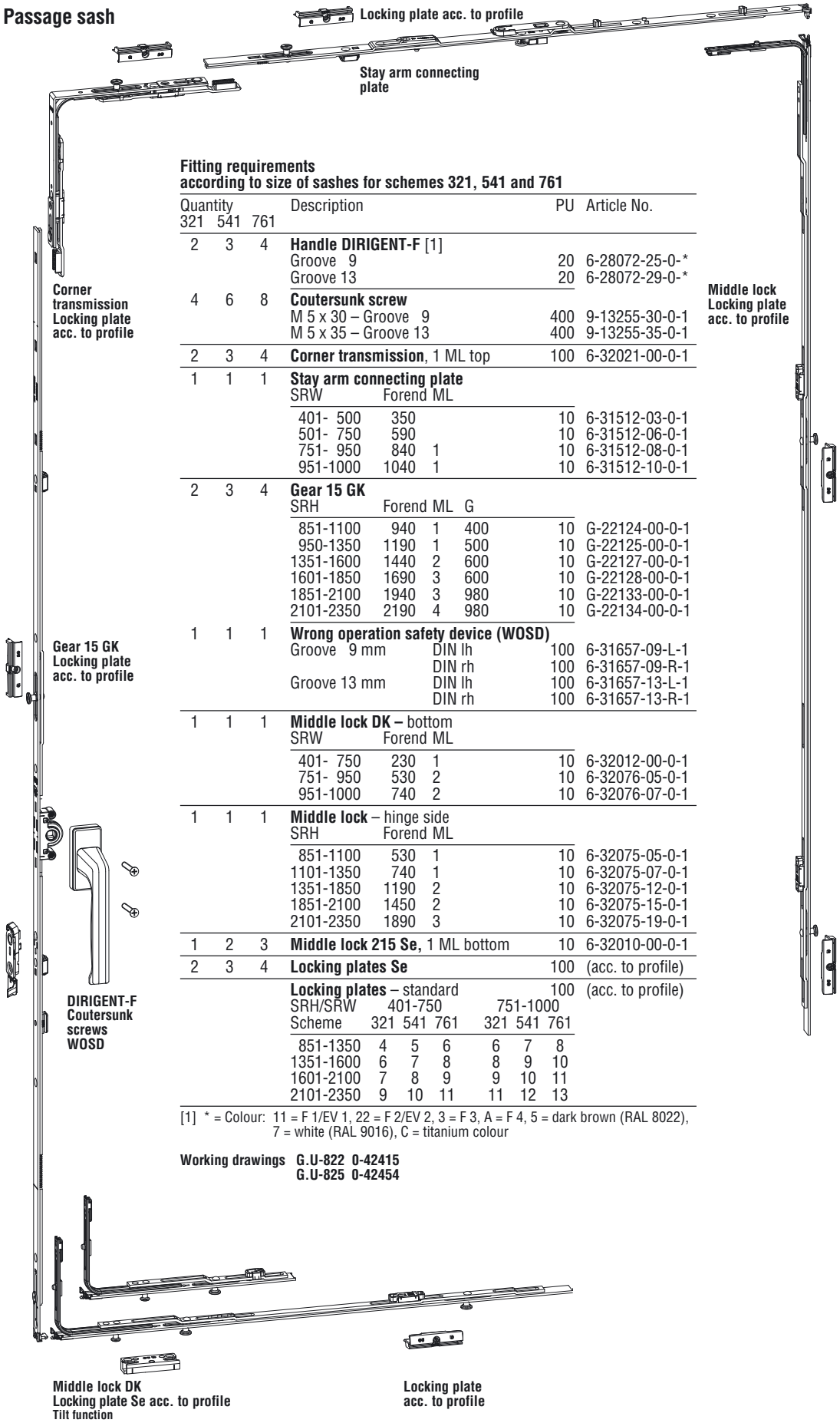

Fitting requirements
according to size of sashes for schemes 321, 541 and 761

Quantity 321	541	761	Description			PU	Article No.
2	3	4	**Handle DIRIGENT-F** [1]				
			Groove 9			20	6-28072-25-0-*
			Groove 13			20	6-28072-29-0-*
4	6	8	**Coutersunk screw**				
			M 5 x 30 – Groove 9			400	9-13255-30-0-1
			M 5 x 35 – Groove 13			400	9-13255-35-0-1
2	3	4	**Corner transmission**, 1 ML top			100	6-32021-00-0-1
1	1	1	**Stay arm connecting plate**				
			SRW	Forend	ML		
			401- 500	350		10	6-31512-03-0-1
			501- 750	590		10	6-31512-06-0-1
			751- 950	840	1	10	6-31512-08-0-1
			951-1000	1040	1	10	6-31512-10-0-1
2	3	4	**Gear 15 GK**				
			SRH	Forend	ML	G	
			851-1100	940	1	400	10	G-22124-00-0-1
			950-1350	1190	1	500	10	G-22125-00-0-1
			1351-1600	1440	2	600	10	G-22127-00-0-1
			1601-1850	1690	3	600	10	G-22128-00-0-1
			1851-2100	1940	3	980	10	G-22133-00-0-1
			2101-2350	2190	4	980	10	G-22134-00-0-1
1	1	1	**Wrong operation safety device (WOSD)**				
			Groove 9 mm		DIN lh	100	6-31657-09-L-1
					DIN rh	100	6-31657-09-R-1
			Groove 13 mm		DIN lh	100	6-31657-13-L-1
					DIN rh	100	6-31657-13-R-1
1	1	1	**Middle lock DK –** bottom				
			SRW	Forend	ML		
			401- 750	230	1	10	6-32012-00-0-1
			751- 950	530	2	10	6-32076-05-0-1
			951-1000	740	2	10	6-32076-07-0-1
1	1	1	**Middle lock** – hinge side				
			SRH	Forend	ML		
			851-1100	530	1	10	6-32075-05-0-1
			1101-1350	740	1	10	6-32075-07-0-1
			1351-1850	1190	2	10	6-32075-12-0-1
			1851-2100	1450	2	10	6-32075-15-0-1
			2101-2350	1890	3	10	6-32075-19-0-1
1	2	3	**Middle lock 215 Se,** 1 ML bottom			10	6-32010-00-0-1
2	3	4	**Locking plates Se**			100	(acc. to profile)
			Locking plates – standard			100	(acc. to profile)
			SRH/SRW	401-750		751-1000	
			Scheme	321 541 761		321 541 761	
			851-1350	4 5 6		6 7 8	
			1351-1600	6 7 8		8 9 10	
			1601-2100	7 8 9		9 10 11	
			2101-2350	9 10 11		11 12 13	

[1] * = Colour: 11 = F 1/EV 1, 22 = F 2/EV 2, 3 = F 3, A = F 4, 5 = dark brown (RAL 8022), 7 = white (RAL 9016), C = titanium colour

Working drawings **G.U-822 0-42415**
G.U-825 0-42454

Windows and patio doors with handle inside for sash profiles with fitting groove 16 mm
Schemes 431 and 651 – passage sash: tilt-turn

Folding sash

Passage sash

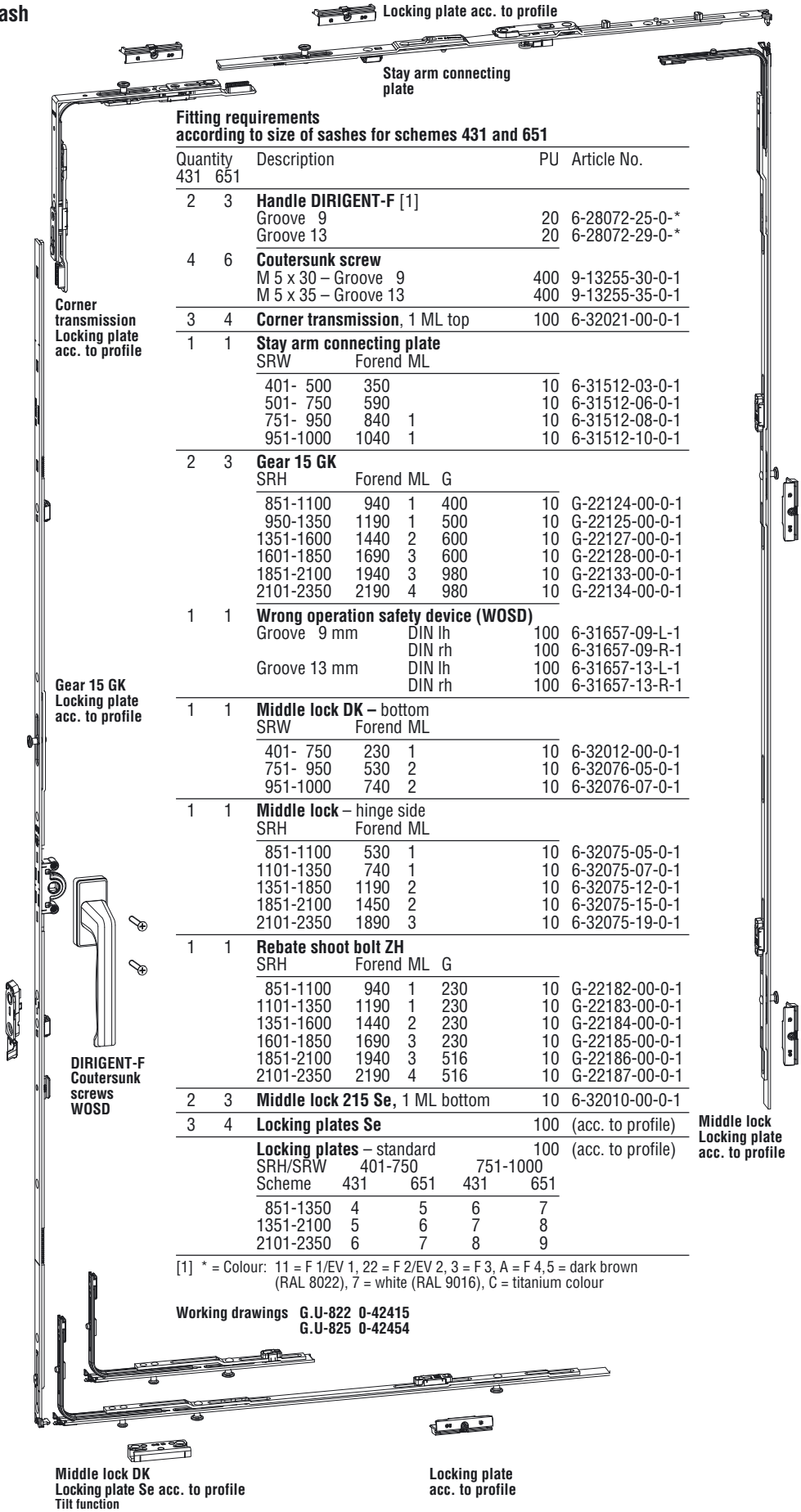

Fitting requirements
according to size of sashes for schemes 431 and 651

Quantity 431	Quantity 651	Description				PU	Article No.
2	3	**Handle DIRIGENT-F** [1]					
		Groove 9				20	6-28072-25-0-*
		Groove 13				20	6-28072-29-0-*
4	6	**Coutersunk screw**					
		M 5 x 30 – Groove 9				400	9-13255-30-0-1
		M 5 x 35 – Groove 13				400	9-13255-35-0-1
3	4	**Corner transmission**, 1 ML top				100	6-32021-00-0-1
1	1	**Stay arm connecting plate**					
		SRW	Forend	ML			
		401- 500	350			10	6-31512-03-0-1
		501- 750	590			10	6-31512-06-0-1
		751- 950	840	1		10	6-31512-08-0-1
		951-1000	1040	1		10	6-31512-10-0-1
2	3	**Gear 15 GK**					
		SRH	Forend	ML	G		
		851-1100	940	1	400	10	G-22124-00-0-1
		950-1350	1190	1	500	10	G-22125-00-0-1
		1351-1600	1440	2	600	10	G-22127-00-0-1
		1601-1850	1690	3	600	10	G-22128-00-0-1
		1851-2100	1940	3	980	10	G-22133-00-0-1
		2101-2350	2190	4	980	10	G-22134-00-0-1
1	1	**Wrong operation safety device (WOSD)**					
		Groove 9 mm			DIN lh	100	6-31657-09-L-1
					DIN rh	100	6-31657-09-R-1
		Groove 13 mm			DIN lh	100	6-31657-13-L-1
					DIN rh	100	6-31657-13-R-1
1	1	**Middle lock DK –** bottom					
		SRW	Forend	ML			
		401- 750	230	1		10	6-32012-00-0-1
		751- 950	530	2		10	6-32076-05-0-1
		951-1000	740	2		10	6-32076-07-0-1
1	1	**Middle lock** – hinge side					
		SRH	Forend	ML			
		851-1100	530	1		10	6-32075-05-0-1
		1101-1350	740	1		10	6-32075-07-0-1
		1351-1850	1190	2		10	6-32075-12-0-1
		1851-2100	1450	2		10	6-32075-15-0-1
		2101-2350	1890	3		10	6-32075-19-0-1
1	1	**Rebate shoot bolt ZH**					
		SRH	Forend	ML	G		
		851-1100	940	1	230	10	G-22182-00-0-1
		1101-1350	1190	1	230	10	G-22183-00-0-1
		1351-1600	1440	2	230	10	G-22184-00-0-1
		1601-1850	1690	3	230	10	G-22185-00-0-1
		1851-2100	1940	3	516	10	G-22186-00-0-1
		2101-2350	2190	4	516	10	G-22187-00-0-1
2	3	**Middle lock 215 Se**, 1 ML bottom				10	6-32010-00-0-1
3	4	**Locking plates Se**				100	(acc. to profile)
		Locking plates – standard				100	(acc. to profile)
		SRH/SRW	401-750		751-1000		
		Scheme	431	651	431	651	
		851-1350	4	5	6	7	
		1351-2100	5	6	7	8	
		2101-2350	6	7	8	9	

[1] * = Colour: 11 = F 1/EV 1, 22 = F 2/EV 2, 3 = F 3, A = F 4,5 = dark brown (RAL 8022), 7 = white (RAL 9016), C = titanium colour

Working drawings **G.U-822 0-42415**
G.U-825 0-42454

Windows and patio doors with handle inside for sash profiles with fitting groove 16 mm
Schemes 330, 532, 550, 633, 743 and 770 – passage sash: side hung

Folding sash | **Passage sash**

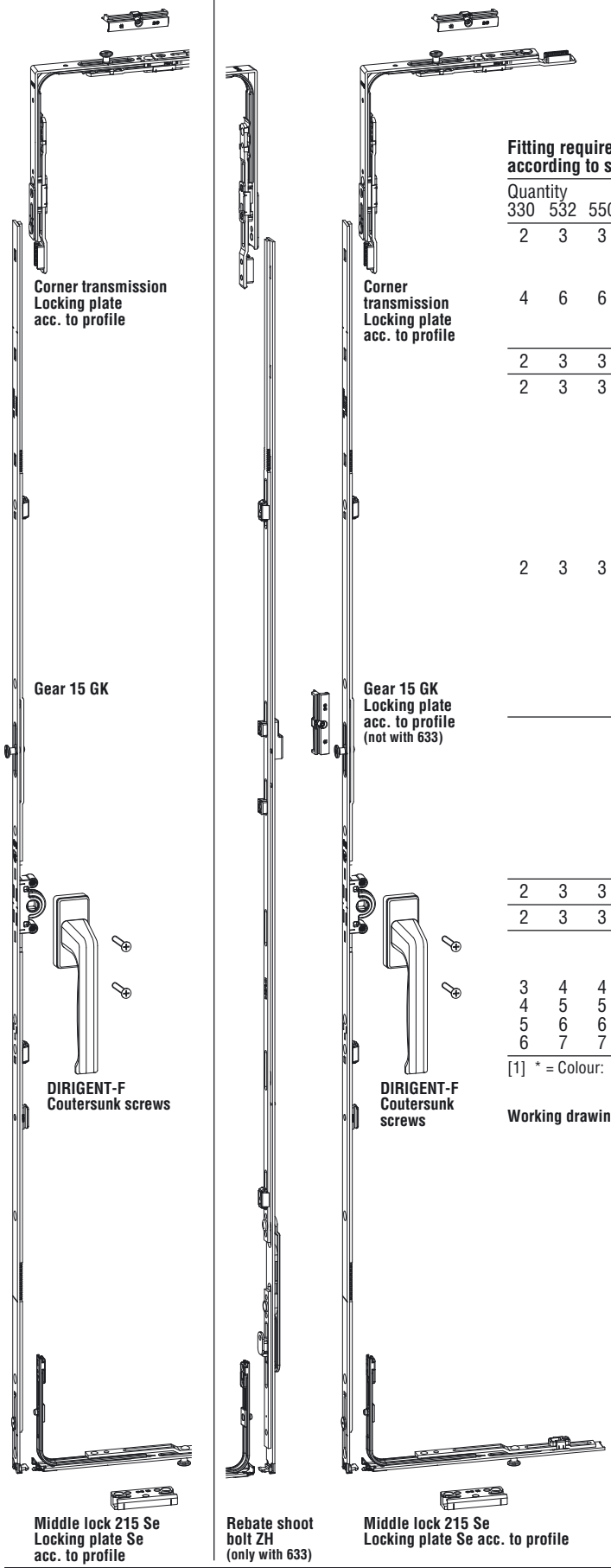

Fitting requirements
according to size of sashes for schemes 330, 532, 550, 633, 743 and 770

Quantity 330	532	550	633	743	770	Description				PU	Article No.
2	3	3	3	4	4	**Handle DIRIGENT-F** [1]					
						Groove 9				20	6-28072-25-0-*
						Groove 13				20	6-28072-29-0-*
4	6	6	6	8	8	**Coutersunk screw**					
						M 5 x 30 – Groove 9				400	9-13255-30-0-1
						M 5 x 35 – Groove 13				400	9-13255-35-0-1
2	3	3	4	4	4	**Corner transmission**, 1 ML top				100	6-32021-00-0-1
2	3	3	3	4	4	**Gear 15 GK**					
						SRH	Forend	ML	G		
						851-1100	940	1	400	10	G-22124-00-0-1
						950-1350	1190	1	500	10	G-22125-00-0-1
						1351-1600	1440	2	600	10	G-22127-00-0-1
						1601-1850	1690	3	600	10	G-22128-00-0-1
						1851-2100	1940	3	980	10	G-22133-00-0-1
						2101-2350	2190	4	980	10	G-22134-00-0-1
						alternatively:					
2	3	3	3	4	4	**Gear 25 GK**					
						SRH	Forend	ML	G		
						851-1100	940	1	400	10	G-22790-00-0-1
						950-1350	1190	1	500	10	G-22791-00-0-1
						1351-1600	1440	2	600	10	G-22792-00-0-1
						1601-1850	1690	3	600	10	G-22793-00-0-1
						1851-2100	1940	3	980	10	G-22321-00-0-1
						2101-2350	2190	4	980	10	G-22322-00-0-1
			1			**Rebate shoot bolt ZH**					
						SRH	Forend	ML	G		
						851-1100	940	1	230	10	G-22182-00-0-1
						1101-1350	1190	1	230	10	G-22183-00-0-1
						1351-1600	1440	2	230	10	G-22184-00-0-1
						1601-1850	1690	3	230	10	G-22185-00-0-1
						1851-2100	1940	3	516	10	G-22186-00-0-1
						2101-2350	2190	4	516	10	G-22187-00-0-1
2	3	3	4	4	4	**Middle lock 215 Se,** 1 ML bottom				10	6-32010-00-0-1
2	3	3	4	4	4	**Locking plates Se**				100	(acc. to profile)
						Locking plates – standard				100	(acc. to profile)
						FFH					
3	4	4	5	5	5	851-1350					
4	5	5	6	6	6	1351-1600					
5	6	6	7	7	7	1601-2100					
6	7	7	8	8	8	2101-2350					

[1] * = Colour: 11 = F 1/EV 1, 22 = F 2/EV 2, 3 = F 3, A = F 4, 5 = dark brown (RAL 8022), 7 = white (RAL 9016), C = titanium colour

Working drawings **G.U-822 0-42415**
G.U-825 0-42454

Windows and patio doors with lockable gear AP for sash profiles with fitting groove 16 mm
Schemes 321, 541 and 761 – passage sash: tilt-turn

Folding sash

Passage sash

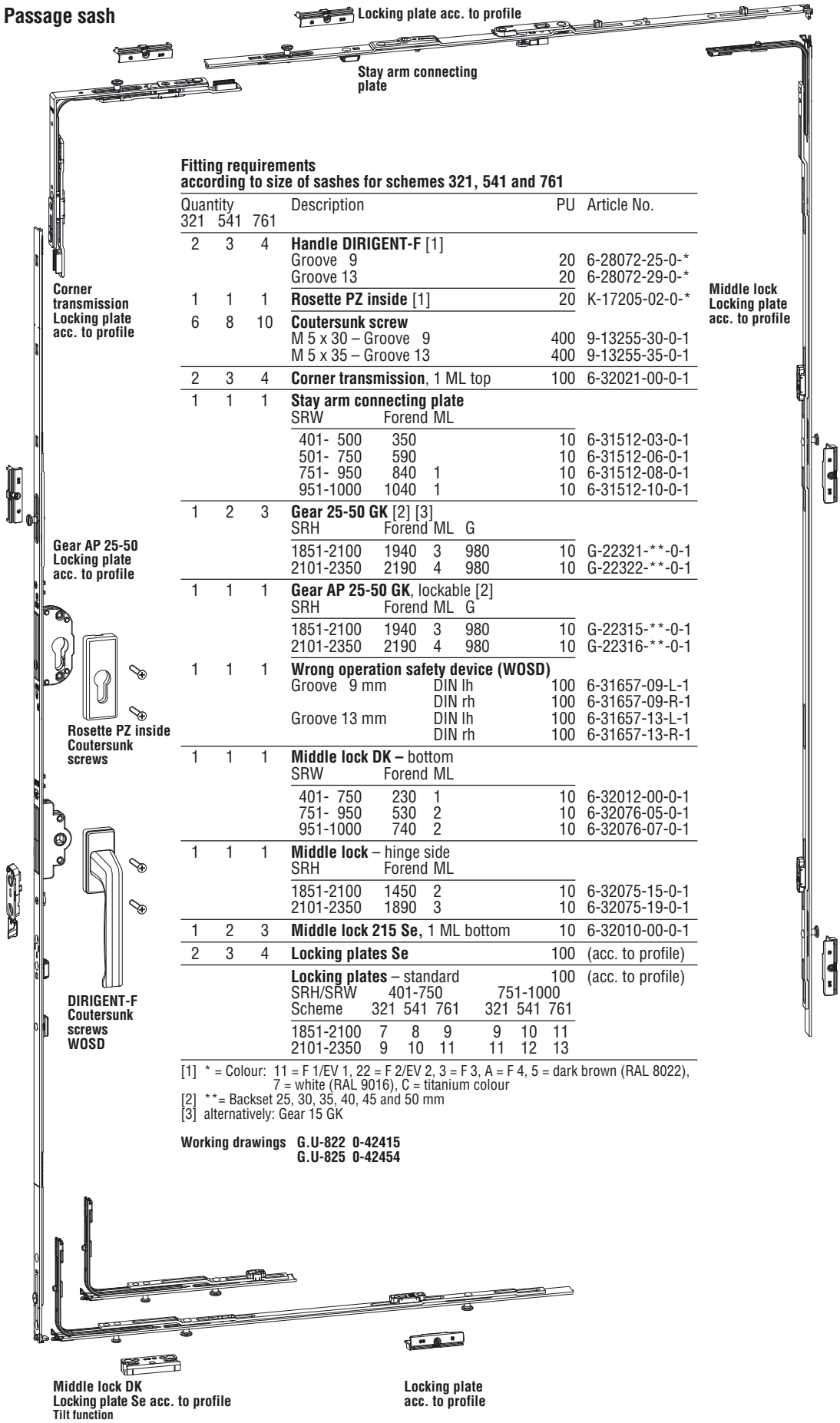

Fitting requirements
according to size of sashes for schemes 321, 541 and 761

Quantity 321	541	761	Description				PU	Article No.
2	3	4	**Handle DIRIGENT-F** [1]					
			Groove 9				20	6-28072-25-0-*
			Groove 13				20	6-28072-29-0-*
1	1	1	**Rosette PZ inside** [1]				20	K-17205-02-0-*
6	8	10	**Coutersunk screw**					
			M 5 x 30 – Groove 9				400	9-13255-30-0-1
			M 5 x 35 – Groove 13				400	9-13255-35-0-1
2	3	4	**Corner transmission**, 1 ML top				100	6-32021-00-0-1
1	1	1	**Stay arm connecting plate**					
			SRW	Forend	ML			
			401- 500	350			10	6-31512-03-0-1
			501- 750	590			10	6-31512-06-0-1
			751- 950	840	1		10	6-31512-08-0-1
			951-1000	1040	1		10	6-31512-10-0-1
1	2	3	**Gear 25-50 GK** [2] [3]					
			SRH	Forend	ML	G		
			1851-2100	1940	3	980	10	G-22321-**-0-1
			2101-2350	2190	4	980	10	G-22322-**-0-1
1	1	1	**Gear AP 25-50 GK**, lockable [2]					
			SRH	Forend	ML	G		
			1851-2100	1940	3	980	10	G-22315-**-0-1
			2101-2350	2190	4	980	10	G-22316-**-0-1
1	1	1	**Wrong operation safety device (WOSD)**					
			Groove 9 mm		DIN lh		100	6-31657-09-L-1
					DIN rh		100	6-31657-09-R-1
			Groove 13 mm		DIN lh		100	6-31657-13-L-1
					DIN rh		100	6-31657-13-R-1
1	1	1	**Middle lock DK –** bottom					
			SRW	Forend	ML			
			401- 750	230	1		10	6-32012-00-0-1
			751- 950	530	2		10	6-32076-05-0-1
			951-1000	740	2		10	6-32076-07-0-1
1	1	1	**Middle lock** – hinge side					
			SRH	Forend	ML			
			1851-2100	1450	2		10	6-32075-15-0-1
			2101-2350	1890	3		10	6-32075-19-0-1
1	2	3	**Middle lock 215 Se,** 1 ML bottom				10	6-32010-00-0-1
2	3	4	**Locking plates Se**				100	(acc. to profile)
			Locking plates – standard				100	(acc. to profile)
			SRH/SRW	401-750		751-1000		
			Scheme	321 541 761		321 541 761		
			1851-2100	7 8 9		9 10 11		
			2101-2350	9 10 11		11 12 13		

[1] * = Colour: 11 = F 1/EV 1, 22 = F 2/EV 2, 3 = F 3, A = F 4, 5 = dark brown (RAL 8022), 7 = white (RAL 9016), C = titanium colour
[2] **= Backset 25, 30, 35, 40, 45 and 50 mm
[3] alternatively: Gear 15 GK

Working drawings **G.U-822 0-42415**
G.U-825 0-42454

Windows and patio doors with lockable gear AP for sash profiles with fitting groove 16 mm
Schemes 431 and 651 – passage sash: tilt-turn

Folding sash

Passage sash

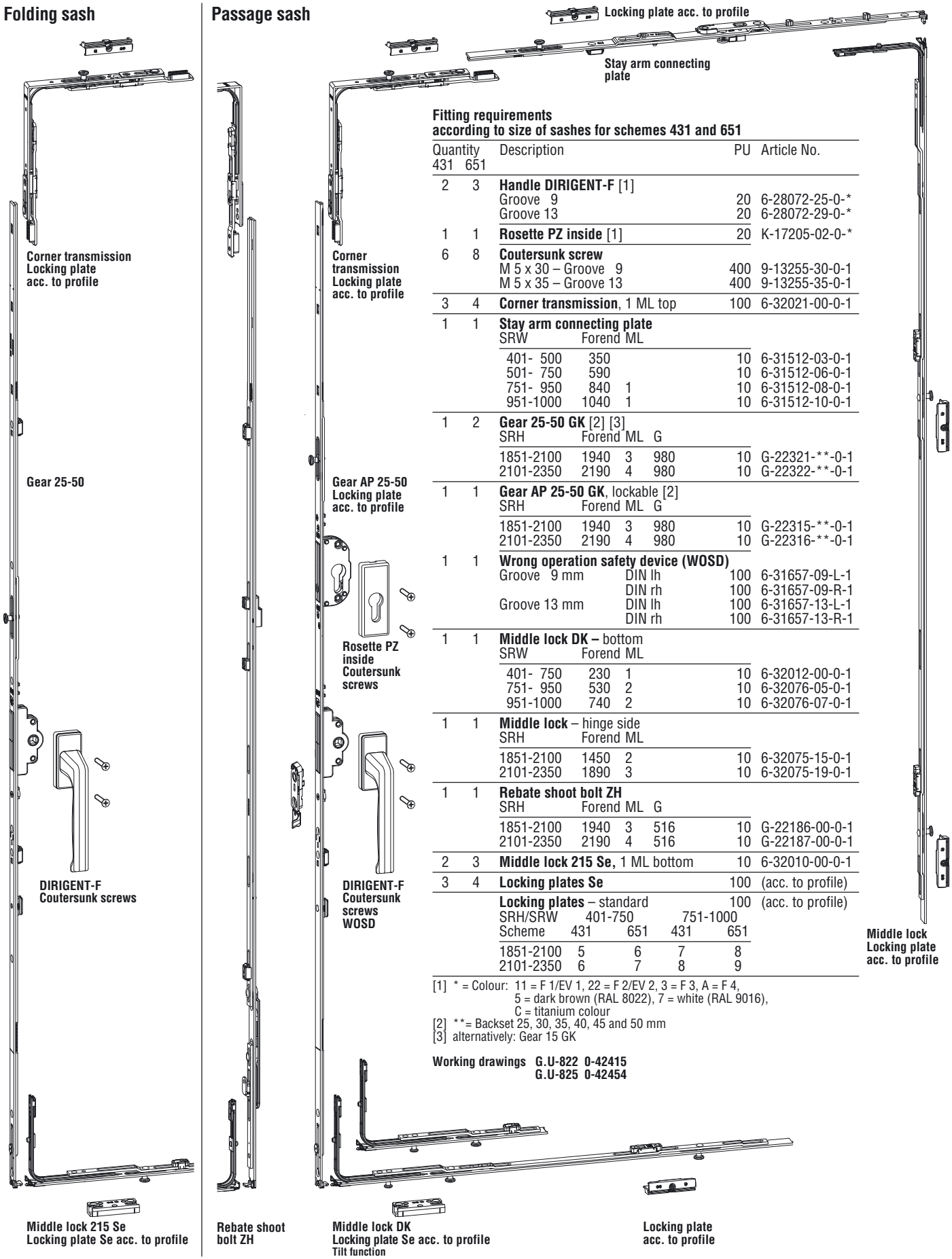

Fitting requirements according to size of sashes for schemes 431 and 651

Quantity 431	Quantity 651	Description	PU	Article No.
2	3	**Handle DIRIGENT-F** [1]		
		Groove 9	20	6-28072-25-0-*
		Groove 13	20	6-28072-29-0-*
1	1	**Rosette PZ inside** [1]	20	K-17205-02-0-*
6	8	**Coutersunk screw**		
		M 5 x 30 – Groove 9	400	9-13255-30-0-1
		M 5 x 35 – Groove 13	400	9-13255-35-0-1
3	4	**Corner transmission**, 1 ML top	100	6-32021-00-0-1
1	1	**Stay arm connecting plate**		
		SRW / Forend / ML		
		401- 500 / 350	10	6-31512-03-0-1
		501- 750 / 590	10	6-31512-06-0-1
		751- 950 / 840 / 1	10	6-31512-08-0-1
		951-1000 / 1040 / 1	10	6-31512-10-0-1
1	2	**Gear 25-50 GK** [2] [3]		
		SRH / Forend / ML / G		
		1851-2100 / 1940 / 3 / 980	10	G-22321-**-0-1
		2101-2350 / 2190 / 4 / 980	10	G-22322-**-0-1
1	1	**Gear AP 25-50 GK**, lockable [2]		
		SRH / Forend / ML / G		
		1851-2100 / 1940 / 3 / 980	10	G-22315-**-0-1
		2101-2350 / 2190 / 4 / 980	10	G-22316-**-0-1
1	1	**Wrong operation safety device (WOSD)**		
		Groove 9 mm / DIN lh	100	6-31657-09-L-1
		DIN rh	100	6-31657-09-R-1
		Groove 13 mm / DIN lh	100	6-31657-13-L-1
		DIN rh	100	6-31657-13-R-1
1	1	**Middle lock DK –** bottom		
		SRW / Forend / ML		
		401- 750 / 230 / 1	10	6-32012-00-0-1
		751- 950 / 530 / 2	10	6-32076-05-0-1
		951-1000 / 740 / 2	10	6-32076-07-0-1
1	1	**Middle lock** – hinge side		
		SRH / Forend / ML		
		1851-2100 / 1450 / 2	10	6-32075-15-0-1
		2101-2350 / 1890 / 3	10	6-32075-19-0-1
1	1	**Rebate shoot bolt ZH**		
		SRH / Forend / ML / G		
		1851-2100 / 1940 / 3 / 516	10	G-22186-00-0-1
		2101-2350 / 2190 / 4 / 516	10	G-22187-00-0-1
2	3	**Middle lock 215 Se,** 1 ML bottom	10	6-32010-00-0-1
3	4	**Locking plates Se**	100	(acc. to profile)
		Locking plates – standard	100	(acc. to profile)
		SRH/SRW 401-750 751-1000		
		Scheme 431 651 431 651		
		1851-2100 5 6 7 8		
		2101-2350 6 7 8 9		

[1] * = Colour: 11 = F 1/EV 1, 22 = F 2/EV 2, 3 = F 3, A = F 4,
5 = dark brown (RAL 8022), 7 = white (RAL 9016),
C = titanium colour
[2] **= Backset 25, 30, 35, 40, 45 and 50 mm
[3] alternatively: Gear 15 GK

Working drawings G.U-822 0-42415
G.U-825 0-42454

Windows and patio doors with lockable gear AP for sash profiles with fitting groove 16 mm
Schemes 330, 532, 550, 633, 743 and 770 – passage sash: side hung

Folding sash | **Passage sash**

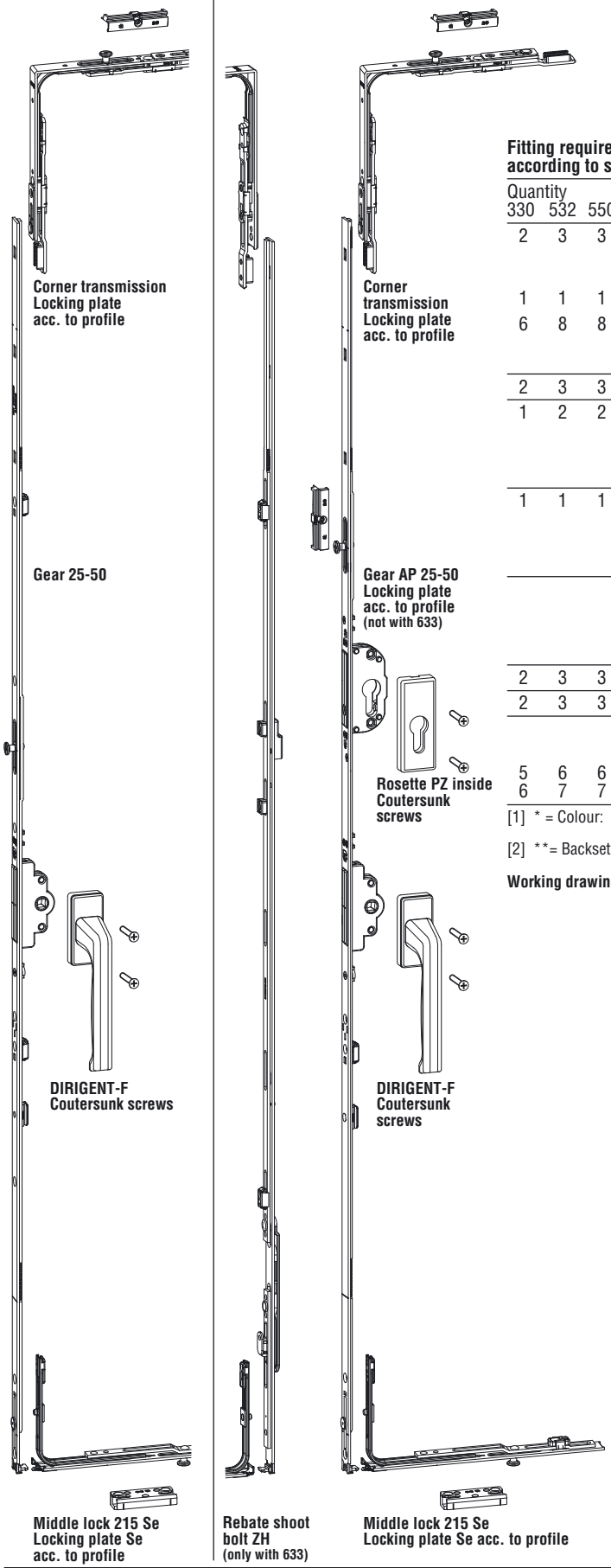

Fitting requirements
according to size of sashes for schemes 330, 532, 550, 633, 743 and 770

Quantity 330	532	550	633	743	770	Description	PU	Article No.
2	3	3	3	4	4	**Handle DIRIGENT-F** [1]		
						Groove 9	20	6-28072-25-0-*
						Groove 13	20	6-28072-29-0-*
1	1	1	1	1	1	**Rosette PZ inside** [1]	20	K-17205-02-0-*
6	8	8	8	10	10	**Coutersunk screw**		
						M 5 x 30 – Groove 9	400	9-13255-30-0-1
						M 5 x 35 – Groove 13	400	9-13255-35-0-1
2	3	3	4	4	4	**Corner transmission**, 1 ML top	100	6-32021-00-0-1
1	2	2	2	3	3	**Gear 25-50 GK** [2]		
						SRH Forend ML G		
						1851-2100 1940 3 980	10	G-22321-**-0-1
						2101-2350 2190 4 980	10	G-22322-**-0-1
1	1	1	1	1	1	**Gear AP 25-50 GK**, lockable [2]		
						SRH Forend ML G		
						1851-2100 1940 3 980	10	G-22315-**-0-1
						2101-2350 2190 4 980	10	G-22316-**-0-1
			1			**Rebate shoot bolt ZH**		
						SRH Forend ML G		
						1851-2100 1940 3 516	10	G-22186-00-0-1
						2101-2350 2190 4 516	10	G-22187-00-0-1
2	3	3	4	4	4	**Middle lock 215 Se,** 1 ML bottom	10	6-32010-00-0-1
2	3	3	4	4	4	**Locking plates Se**	100	(acc. to profile)
						Locking plates – standard	100	(acc. to profile)
						FFH		
5	6	6	7	7	7	1851-2100		
6	7	7	8	8	8	2101-2350		

[1] * = Colour: 11 = F 1/EV 1, 22 = F 2/EV 2, 3 = F 3, A = F 4, 5 = dark brown (RAL 8022), 7 = white (RAL 9016), C = titanium colour
[2] **= Backset 25, 30, 35, 40, 45 and 50 mm

Working drawings **G.U-822 0-42415**
G.U-825 0-42454

Windows and patio doors inward opening – bottom running – sash profiles with fitting groove 16 mm

End cap 9-32532-00-0-*
Gliding rail P 1381
Cover rail P 1226

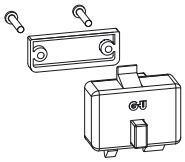

Folding catch
Packing
Spax cylinder screw

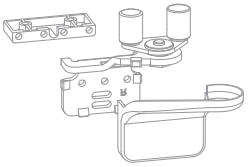

Support
9-33628-08-0-0
Gliding roller
6-25336-00-0-1
Corner bearing
9-33448-00-R-1
Cover
9-33449-00-R-*

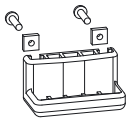

Support
Fillister head screws
Square nut

Fitting requirements according to size of sashes

Quantity 321	330	431	541	550	532	651	633	761	770	743	Description	PU	Article No.
1	1	1	2	2	2	2	2	3	3	3	**Basic box G.U-822** [1]	1	K-13861-08-0-*
											Contents		
											1 Runner; 1 Gliding roller; 1 Corner bearing, lh; 1 Corner bearing, rh; 1 Cover, lh; 1 Cover, rh; 2 Support		
3 [2]	3	4 [2]	5 [2]	5	5	6 [2]	6	7 [2]	7	7	**Box of sash hinge G.U-822/825**		
											17/40	1	K-13205-01-0-1
											17/45	1	K-13205-03-0-1
											25/45	1	K-13812-00-0-1
											17/17	1	K-13813-00-0-1
											Contents		
											3 Sash hinge long; 3 Sash hinge short; 3 Hinge pin		
2 [2]	1	2 [2]	2 [2]	1	2	2 [2]	2	2 [2]	1	2	**Bag of Packing** [1] for sash hinge	1	K-14088-00-0-*
3 [2]	3	4 [2]	5 [2]	5	5	6 [2]	6	7 [2]	7	7	**Bag of covers G.U-822/825** [1]		
											for sash hinge 17/40, 17/45	1	K-15392-00-0-*
											for sash hinge 25/45	1	K-15399-00-0-*
											for sash hinge 17/17	1	K-15393-00-0-*
											Contents		
											3 Cover long; 3 Cover short		
1	1	1	1	1	1	1	1	1	1	1	**Bag of profiles G.U-822** [1]		
											Contents		
											1 Running rail P 1213; 1 Gliding rail P 1381; 1 Cover rail P 1226; 2 End cap		
											TFW mm		
											-2960	1	K-13206-30-0-*
											2961-3960	1	K-13206-40-0-*
											3961-5000	1	K-13206-50-0-*
											5001-6700	1	K-13206-67-0-*
–	1	1	–	1	1	1	2	–	1	1	**Bag of folding catch G.U-822/825** [1]	1	K-13334-00-0-*
											Contents		
											1 Folding catch; 1 Support; 2 Spax cylinder screw 5 x 30; 2 Fillister head screws M 5 x 20; 2 Square nut M 5		
–	1	1	–	1	1	1	2	–	1	1	**Packing** for folding catch [1]	1	9-33492-00-0-*

[1] * = Colour: 1 = F 1/EV 1, 2 = F 2/EV 2, 3 = brass colour, 4 = UC 3, 5 = UC 5, 7 = white (RAL 9016)
[2] If the passage sash is tilt-turn (instead of side hung), 1 box of axial hinge, 1 bag of packing and 1 bag of covers less are required.

Working drawing 0-42415

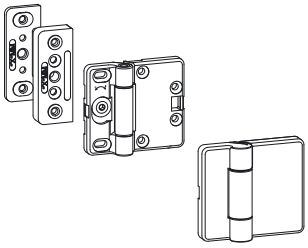

Packing for sash hinge

Sash hinge long
Sash hinge short
Hinge pin

Cover long
Cover short

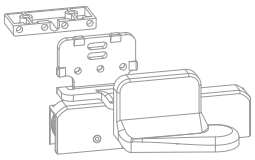

Support
9-33628-08-0-0
Corner bearing
9-33448-00-L-1
Runner
6-25334-00-0-*
Cover
9-33449-00-L-*

Running rail P 1213

Windows and patio doors inward opening – top running – sash profiles with fitting groove 16 mm

End cap, lh 9-32740-00-L-*
Cover rail P 1391
Running rail P 1213

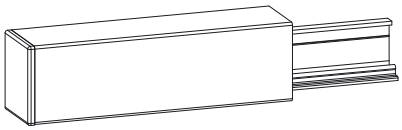

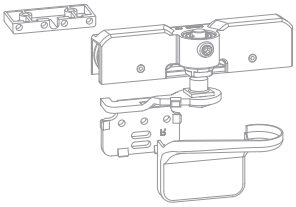

Support
9-33628-08-0-0
Runner
6-25436-00-0-*
Corner bearing
9-33448-00-L-1
Cover
9-33449-00-L-*

Support
9-32741-00-0-0

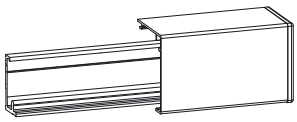

Running rail P 1213
Cover rail P 1391
End cap, rh 9-32740-00-R-*

Fitting requirements according to size of sashes

Quantity 321	330	431	541	550	532	651	633	761	770	743	Description	PU	Article No.
1	1	1	2	2	2	2	2	3	3	3	**Basic box G.U-825** [1]	1	K-13982-08-0-*
											Contents		
											1 Runner; 1 Gliding roller; 1 Corner bearing, lh; 1 Corner bearing, rh; 1 Cover, lh; 1 Cover, rh; 2 Support		
3 [2]	3	4 [2]	5 [2]	5	5	6 [2]	6	7 [2]	7	7	**Box of sash hinge G.U-822/825**		
											17/40	1	K-13205-01-0-1
											17/45	1	K-13205-03-0-1
											25/45	1	K-13812-00-0-1
											17/17	1	K-13813-00-0-1
											Contents		
											3 Sash hinge long; 3 Sash hinge short; 3 Hinge pin		
2 [2]	1	2 [2]	2 [2]	1	2	2 [2]	2	2 [2]	1	2	**Bag of Packing** [1] for sash hinge	1	K-14088-00-0-*
3 [2]	3	4 [2]	5 [2]	5	5	6 [2]	6	7 [2]	7	7	**Bag of covers G.U-822/825** [1]		
											for sash hinge 17/40, 17/45	1	K-15392-00-0-*
											for sash hinge 25/45	1	K-15399-00-0-*
											for sash hinge 17/17	1	K-15393-00-0-*
											Contents		
											3 Cover long; 3 Cover short		
1	1	1	1	1	1	1	1	1	1	1	**Bag of profiles G.U-825** [1] Inhalt		
											1 Running rail P 1213; 1 Gliding rail P 1381; 1 Cover rail P 1226; 1 Cover rail P 1391; 1 End cap, lh; 1 End cap, rh; 2 Support		
											RAB mm		
											-2960	1	K-13272-30-0-*
											2961-3960	1	K-13272-40-0-*
											3961-5000	1	K-13272-50-0-*
											5001-6700	1	K-13272-67-0-*
–	1	1	–	1	1	1	2	–	1	1	**Bag of folding catch G.U-822/825** [1]	1	K-13334-00-0-*
											Contents		
											1 Folding catch; 1 Support; 2 Spax cylinder screw 5 x 30; 2 Fillister head screws M 5 x 20; 2 Square nut M 5		
–	1	1	–	1	1	1	2	–	1	1	**Packing** for folding catch [1]	1	9-33492-00-0-*

[1] * = Colour: 1 = F 1/EV 1, 2 = F 2/EV 2, 3 = brass colour, 4 = UC 3, 5 = UC 5, 7 = white (RAL 9016)
[2] If the passage sash is tilt-turn (instead of side hung), 1 box of axial hinge, 1 bag of packing and 1 bag of covers less are required.

Working drawing 0-42454

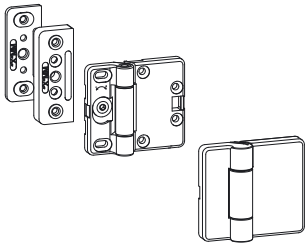

Packing for sash hinge
Sash hinge long
Sash hinge short
Hinge pin
Cover long
Cover short

Gliding rail P 1381
Cover rail P 1226

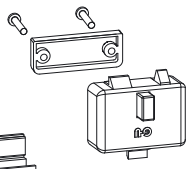

Spax cylinder screw
Packing
Folding catch

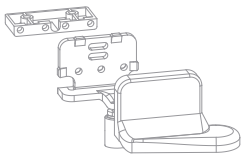

Support
9-33628-08-0-0
Corner bearing
9-33448-00-R-1
Gliding roller
6-25336-00-0-1
Cover
9-33449-00-R-*

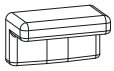

Fillister head screws
Square nut
Support

Gliding rail P 1381
Cover rail P 1226

Tilt-turn fittings – for sash with undercut fitting groove 16 mm

Tilt-turn passage sash

Fitting requirements for schemes 321, 431, 541, 651 and 761

Qty.	Description	PU	Article No.
1	**Stay arm tilt-turn**		
	SRW		
	280- 500	10	6-31518-03-0-1
	501- 750	10	6-31518-06-0-1
	751-1200	10	6-31518-08-0-1
	1201-1600	10	6-31518-12-0-1

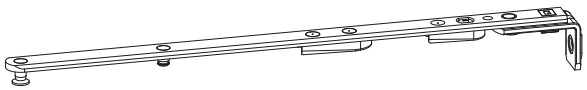

Stay arm tilt-turn

Tilt-turn passage sash

Fitting requirements for schemes 321, 431, 541, 651 and 761

Qty.	Description		PU	Article No.
1	**Bag of hinge side** [1]			
	for sash with undercut fitting groove 16 mm			
	Groove 9	Sash overlap 18	10	K-17125-18-0-*
	Frame groove 14 / 18	Sash overlap 20	10	K-17125-20-0-*
	Groove 9	Sash overlap 18	10	K-17506-18-0-*
	Frame groove 10 / 14	Sash overlap 20	10	K-17506-20-0-*
	Contents			
	1 Stay arm bearing [1]	Sash overlap 18		6-31591-18-0-*
		Sash overlap 20		6-31591-20-0-*
	1 Stay arm bearing axle			6-30874-00-0-6
	1 Stay arm hinge [1]	Sash overlap 18		6-31592-18-0-*
		Sash overlap 20		6-31592-20-0-*
	1 Bearing sleeve			9-39805-00-0-6
	2 Covers			9-39807-00-0-6
	1 Corner bearing [1]	Sash overlap 18		9-39812-00-0-*
		Sash overlap 20		9-43356-00-0-*
	1 Corner bearing case	Frame groove 14 / 18		6-30872-00-0-1
		Frame groove 10 / 14		6-32055-00-0-1
	1 Corner bearing axle			6-31087-00-0-6
	1 Corner hinge [1]	Sash overlap 18		6-31575-18-0-*
		Sash overlap 20		6-31575-20-0-*
	1 Clamping angle			6-33462-00-0-1
	2 Countersunk screws			9-13489-12-R-8
	1 Bearing sleeve 130	Sash weight > 80 kg		9-43545-00-0-1
1	**Bag of middle hinge** [1]			
	for sash with undercut fitting groove 16 mm			
	Groove 9	Sash overlap 18	10	K-17216-18-0-*
		Sash overlap 20	10	K-17216-20-0-*
	Contents			
	1 Bearing hinge [1]	Sash overlap 18		6-33727-18-0-*
		Sash overlap 20		6-33727-20-0-*
	1 Middle hinge [1]	Sash overlap 18		6-33751-18-0-*
		Sash overlap 20		6-33751-20-0-*
	1 Stay arm bearing axle			6-30874-00-0-6
	1 Bearing sleeve			9-39805-00-0-6
	1 Cover			9-39807-00-0-6

[1] * = Colour: 0 = uncoated, 1 = F 1/EV 1, 6 = black (RAL 9005), 7 = white (RAL 9016), 7T = white (RAL 9010)

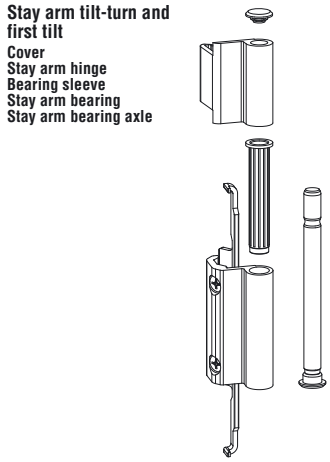

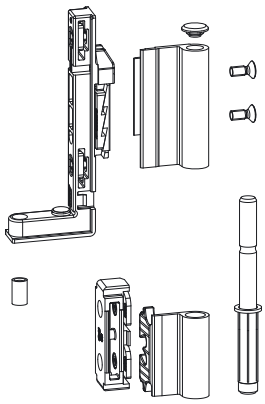

Optional part

Qty.	Description	PU	Article No.
1	**Bag of bearing sleeves/covers light grey** [1]	1	K-17803-00-0-1
	for all bags of hinge side/middle hinge UNI-JET C		
	Contents		
	1 Bearing sleeve		9-39805-00-0-1
	2 Covers		9-39807-00-0-1
	1 Corner bearing sleeve		9-39831-00-0-1
	1 Safety cover		9-39806-00-0-1

[1] * = Colour: 0 = uncoated, 1 = F 1/EV 1, 6 = black (RAL 9005), 7 = white (RAL 9016), 7T = white (RAL 9010)

Working drawing 0-44708

Tilt-turn fittings – for sash with plane fitting groove 16 mm

Tilt-turn passage sash

Fitting requirements for schemes 321, 431, 541, 651 and 761

Qty.	Description	PU	Article No.
1	**Stay arm tilt-turn**		
	SRW		
	280- 500	10	6-31518-03-0-1
	501- 750	10	6-31518-06-0-1
	751-1200	10	6-31518-08-0-1
	1201-1600	10	6-31518-12-0-1

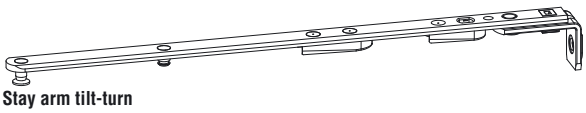

Stay arm tilt-turn

Tilt-turn passage sash

Fitting requirements for schemes 321, 431, 541, 651 and 761

Qty.	Description		PU	Article No.
1	**Bag of hinge side** [1]			
	for sash with plane fitting groove 16 mm			
	Groove 9	Sash overlap 18	10	K-17126-18-0-*
	Frame groove 14 / 18	Sash overlap 20	10	K-17126-20-0-*
	Groove 9	Sash overlap 18	10	K-17507-18-0-*
	Frame groove 10 / 14	Sash overlap 20	10	K-17507-20-0-*
	Contents			
	1 Stay arm bearing [1]	Sash overlap 18		6-31591-18-0-*
		Sash overlap 20		6-31591-20-0-*
	1 Stay arm bearing axle			6-30874-00-0-6
	1 Stay arm hinge [1]	Sash overlap 18		6-31592-18-0-*
		Sash overlap 20		6-31592-20-0-*
	1 Bearing sleeve			9-39805-00-0-6
	2 Covers			9-39807-00-0-6
	1 Corner bearing [1]	Sash overlap 18		9-39812-00-0-*
		Sash overlap 20		9-43356-00-0-*
	1 Corner bearing case	Frame groove 14 / 18		6-30872-00-0-1
		Frame groove 10 / 14		6-32055-00-0-1
	1 Corner bearing axle			6-31087-00-0-6
	1 Corner hinge [1]	Sash overlap 18		6-31575-18-0-*
		Sash overlap 20		6-31575-20-0-*
	1 Support angle			6-33463-00-0-1
	2 Countersunk screws			9-13489-12-R-8
	1 Bearing sleeve 130	Sash weight > 80 kg		9-43545-00-0-1
1	**Bag of middle hinge** [1]			
	for sash with plane fitting groove 16 mm			
	Groove 9	Sash overlap 18	10	K-17217-18-0-*
		Sash overlap 20	10	K-17217-20-0-*
	Contents			
	1 Bearing hinge [1]	Sash overlap 18		6-33727-18-0-*
		Sash overlap 20		6-33727-20-0-*
	1 Middle hinge [1]	Sash overlap 18		6-33752-18-0-*
		Sash overlap 20		6-33752-20-0-*
	1 Stay arm bearing axle			6-30874-00-0-6
	1 Bearing sleeve			9-39805-00-0-6
	1 Cover			9-39807-00-0-6

[1] * = Colour: 0 = uncoated, 1 = F 1/EV 1, 6 = black (RAL 9005), 7 = white (RAL 9016), 7T = white (RAL 9010)

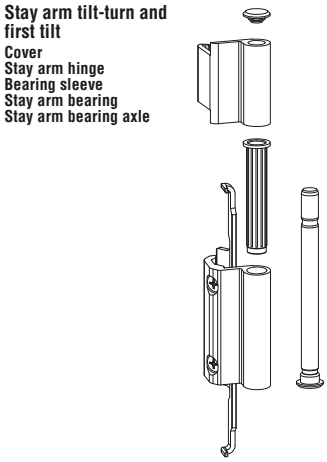

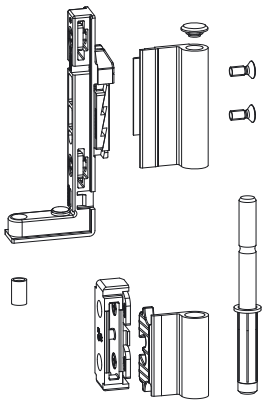

Optional part

Qty.	Description	PU	Article No.
1	**Bag of bearing sleeves/covers light grey** [1]	1	K-17803-00-0-1
	for all bags of hinge side/middle hinge UNI-JET C		
	Contents		
	1 Bearing sleeve		9-39805-00-0-1
	2 Covers		9-39807-00-0-1
	1 Corner bearing sleeve		9-39831-00-0-1
	1 Safety cover		9-39806-00-0-1

[1] * = Colour: 0 = uncoated, 1 = F 1/EV 1, 6 = black (RAL 9005), 7 = white (RAL 9016), 7T = white (RAL 9010)

Working drawing 0-44708

Tilt-turn fittings – for sash with undercut fitting groove 16 mm

Tilt-turn passage sash

Fitting requirements for schemes 321, 431, 541, 651 and 761

Qty.	Description	PU	Article No.
1	**Stay arm tilt-turn**		
	SRW		
	280- 500	10	6-31518-03-0-1
	501- 750	10	6-31518-06-0-1
	751-1200	10	6-31518-08-0-1
	1201-1600	10	6-31518-12-0-1

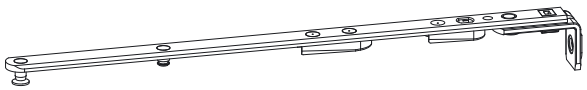

Stay arm tilt-turn

Tilt-turn passage sash

Fitting requirements for schemes 321, 431, 541, 651 and 761

Qty.	Description		PU	Article No.
1	**Bag of hinge side** [1]			
	for sash with plane fitting groove 16 mm			
	Groove 13	Sash overlap 18	10	K-17127-18-0-*
	Frame groove 14 / 18	Sash overlap 20	10	K-17127-20-0-*
	Groove 13	Sash overlap 18	10	K-17508-18-0-*
	Frame groove 10 / 14			
	Contents			
	1 Stay arm bearing [1]	Sash overlap 18		6-31591-18-0-*
		Sash overlap 20		6-31591-20-0-*
	1 Stay arm bearing axle			6-30874-00-0-6
	1 Stay arm hinge [1]	Sash overlap 18		6-33433-18-0-*
		Sash overlap 20		6-33433-20-0-*
	1 Bearing sleeve			9-39805-00-0-6
	2 Covers			9-39807-00-0-6
	1 Corner bearing [1]	Sash overlap 18		9-39812-00-0-*
		Sash overlap 20		9-43356-00-0-*
	1 Corner bearing case	Frame groove 14 / 18		6-30872-00-0-1
		Frame groove 10 / 14		6-32055-00-0-1
	1 Corner bearing axle			6-31087-00-0-6
	1 Corner hinge [1]	Sash overlap 18		6-33432-18-0-*
		Sash overlap 20		6-33432-20-0-*
	1 Clamping angle			6-33462-00-0-1
	2 Countersunk screws			9-13489-12-R-8
	1 Bearing sleeve 130	Sash weight > 80 kg		9-43545-00-0-1
1	**Bag of middle hinge** [1]			
	for sash with undercut fitting groove 16 mm			
	Groove 13	Sash overlap 18	10	K-17218-18-0-*
		Sash overlap 20	10	K-17218-20-0-*
	Contents			
	1 Bearing hinge [1]	Sash overlap 18		6-33727-18-0-*
		Sash overlap 20		6-33727-20-0-*
	1 Middle hinge [1]	Sash overlap 18		6-33806-18-0-*
		Sash overlap 20		6-33806-20-0-*
	1 Stay arm bearing axle			6-30874-00-0-6
	1 Bearing sleeve			9-39805-00-0-6
	1 Cover			9-39807-00-0-6

[1] * = Colour: 0 = uncoated, 1 = F 1/EV 1, 6 = black (RAL 9005), 7 = white (RAL 9016), 7T = white (RAL 9010)

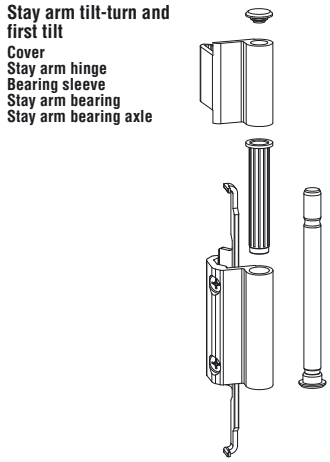

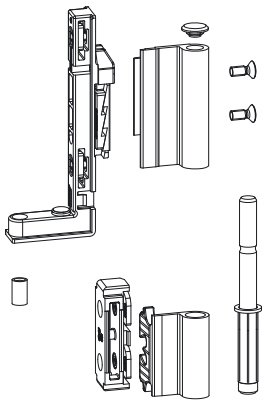

Optional part

Qty.	Description	PU	Article No.
1	**Bag of bearing sleeves/covers light grey** [1]	1	K-17803-00-0-1
	for all bags of hinge side/middle hinge UNI-JET C		
	Contents		
	1 Bearing sleeve		9-39805-00-0-1
	2 Covers		9-39807-00-0-1
	1 Corner bearing sleeve		9-39831-00-0-1
	1 Safety cover		9-39806-00-0-1

[1] * = Colour: 0 = uncoated, 1 = F 1/EV 1, 6 = black (RAL 9005), 7 = white (RAL 9016), 7T = white (RAL 9010)

Working drawing 0-44708

Tilt-turn fittings – for sash with plane fitting groove 16 mm

Tilt-turn passage sash

Fitting requirements for schemes 321, 431, 541, 651 and 761

Qty.	Description	PU	Article No.
1	**Stay arm tilt-turn**		
	SRW		
	280- 500	10	6-31518-03-0-1
	501- 750	10	6-31518-06-0-1
	751-1200	10	6-31518-08-0-1
	1201-1600	10	6-31518-12-0-1

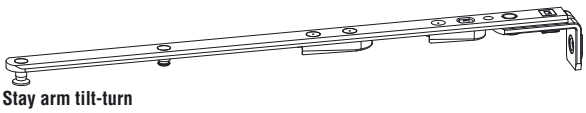

Stay arm tilt-turn

Tilt-turn passage sash

Fitting requirements for schemes 321, 431, 541, 651 and 761

Qty.	Description		PU	Article No.
1	**Bag of hinge side** [1]			
	for sash with plane fitting groove 16 mm			
	Groove 13	Sash overlap 20	10	K-17128-20-0-*
	Frame groove 14 / 18			
	Groove 13	Sash overlap 18	10	K-17509-18-0-*
	Frame groove 10 / 14	Sash overlap 20	10	K-17509-20-0-*
	Contents			
	1 Stay arm bearing [1]	Sash overlap 18		6-31591-18-0-*
		Sash overlap 20		6-31591-20-0-*
	1 Stay arm bearing axle			6-30874-00-0-6
	1 Stay arm hinge [1]	Sash overlap 18		6-33433-18-0-*
		Sash overlap 20		6-33433-20-0-*
	1 Bearing sleeve			9-39805-00-0-6
	2 Covers			9-39807-00-0-6
	1 Corner bearing [1]	Sash overlap 18		9-39812-00-0-*
		Sash overlap 20		9-43356-00-0-*
	1 Corner bearing case	Frame groove 14 / 18		6-30872-00-0-1
		Frame groove 10 / 14		6-32055-00-0-1
	1 Corner bearing axle			6-31087-00-0-6
	1 Corner hinge [1]	Sash overlap 18		6-33432-18-0-*
		Sash overlap 20		6-33432-20-0-*
	1 Support angle			6-33463-00-0-1
	2 Countersunk screws			9-13489-12-R-8
	1 Bearing sleeve 130	Sash weight > 80 kg		9-43545-00-0-1
1	**Bag of middle hinge** [1]			
	for sash with plane fitting groove 16 mm			
	Groove 13	Sash overlap 18	10	K-17219-18-0-*
		Sash overlap 20	10	K-17219-20-0-*
	Contents			
	1 Bearing hinge [1]	Sash overlap 18		6-33727-18-0-*
		Sash overlap 20		6-33727-20-0-*
	1 Middle hinge [1]	Sash overlap 18		6-33807-18-0-*
		Sash overlap 20		6-33807-20-0-*
	1 Stay arm bearing axle			6-30874-00-0-6
	1 Bearing sleeve			9-39805-00-0-6
	1 Cover			9-39807-00-0-6

[1] * = Colour: 0 = uncoated, 1 = F 1/EV 1, 6 = black (RAL 9005), 7 = white (RAL 9016), 7T = white (RAL 9010)

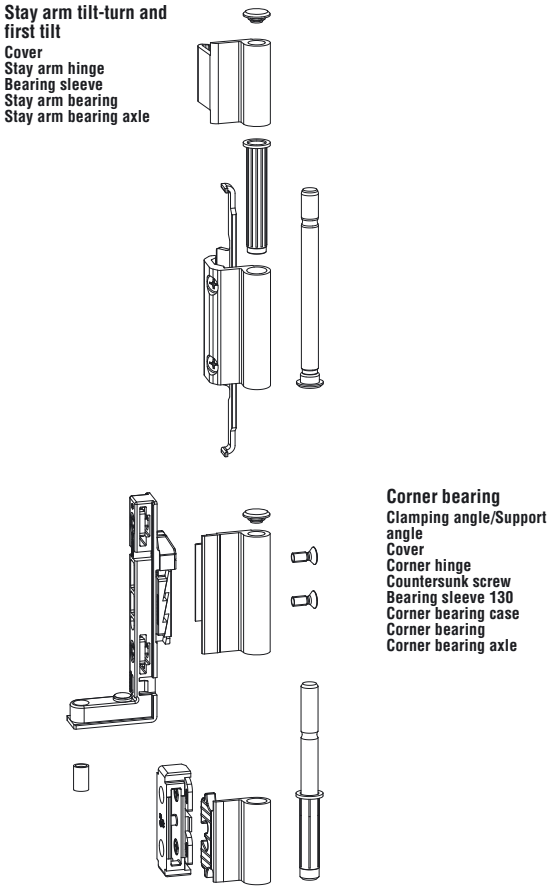

Optional part

Qty.	Description	PU	Article No.
1	**Bag of bearing sleeves/covers light grey** [1]	1	K-17803-00-0-1
	for all bags of hinge side/middle hinge UNI-JET C		
	Contents		
	1 Bearing sleeve		9-39805-00-0-1
	2 Covers		9-39807-00-0-1
	1 Corner bearing sleeve		9-39831-00-0-1
	1 Safety cover		9-39806-00-0-1

[1] * = Colour: 0 = uncoated, 1 = F 1/EV 1, 6 = black (RAL 9005), 7 = white (RAL 9016), 7T = white (RAL 9010)

Working drawing 0-44708

Tilt-turn fittings

Tilt-turn passage sash – groove 9

Fitting requirements for schemes 321, 431, 541, 651 and 761

Qty.	Description	PU	Article No.
1	**Stay arm** [2][3] SRW		
	280- 500	10	6-32970-**-*-1
	501- 750	10	6-32971-**-*-1
	751-1200	10	6-32972-**-*-1
	1201-1600	10	6-32973-**-*-1
1	**Stay arm bearing** Ø 3, L = 2,5	100	6-31636-03-0-1
	with supporting pins Ø 6, L = 2,5	100	6-31636-06-0-1
1	**Cover** for stay arm bearing [1]	100	9-41653-00-0-*
1	**Cover** for stay arm hinge [1]	100	9-41695-00-0-*
1	**Rebate corner hinge** without brake [2][3]	100	6-31521-**-*-1
1	**Corner bearing** [1] Ø 3, L = 2,5	100	6-28743-03-0-*
	with supporting pins Ø 6, L = 22	100	6-28742-22-0-*
1	**Cover** for rebate hinge [1][3]	100	9-40487-00-*-*
1	**Cover** for corner bearing [1]	100	9-35461-00-0-*

[1] * Colour: 1 = EV 1, 3 = F 3, 5 = brown (RAL 8022), 6 = black (RAL 9005), 7 = white (RAL 9016), 8 = stainless steel colour
[2] ** Size 18, 20 or 22 according to sash overlap
[3] * L = DIN left, R = DIN right

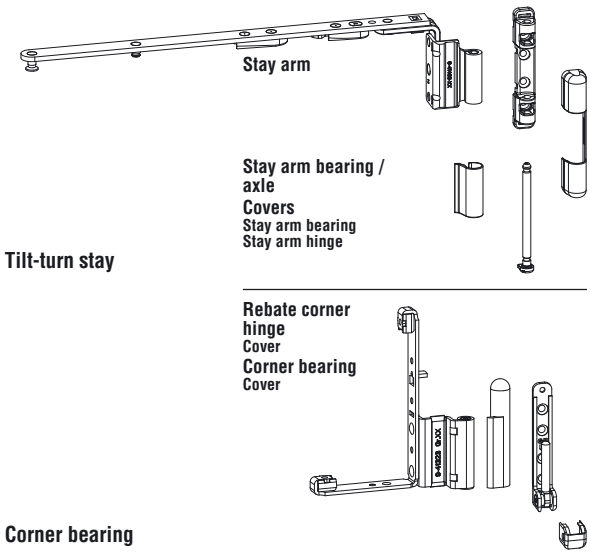

Tilt-turn passage sash – groove 13

Fitting requirements for schemes 321, 431, 541, 651 and 761

Qty.	Description	PU	Article No.
1	**Stay arm** [2][3] SRW		
	280- 500	10	6-34185-**-*-1
	501- 750	10	6-34186-**-*-1
	751-1200	10	6-34187-**-*-1
	1201-1600	10	6-34188-**-*-1
1	**Stay arm bearing** Ø 3, L = 2,5	100	6-31636-03-0-1
	with supporting pins Ø 6, L = 2,5	100	6-31636-06-0-1
1	**Cover** for stay arm bearing [1]	100	9-41653-00-0-*
1	**Cover** for stay arm hinge [1]	100	9-41695-00-0-*
1	**Rebate corner hinge** without brake [2][3]	100	6-31522-**-*-1
1	**Corner bearing** [1] Ø 3, L = 2,5	100	6-28743-03-0-*
	with supporting pins Ø 6, L = 22	100	6-28742-22-0-*
1	**Cover** for rebate hinge [1][3]	100	9-40487-00-*-*
1	**Cover** for corner bearing [1]	100	9-35461-00-0-*

[1] * Colour: 1 = EV 1, 3 = F 3, 5 = brown (RAL 8022), 6 = black (RAL 9005), 7 = white (RAL 9016), 8 = stainless steel colour
[2] ** Size 18, 20 or 22 according to sash overlap
[3] * L = DIN left, R = DIN right

Optional parts for hinge side UNI-JET D

Description		PU	Article No. DIN left	DIN right
Axle		10	6-31840-00-0-1	6-31840-00-0-1
Screw hole cover [1]		100	9-41874-00-0-*	9-41874-00-0-*
Rebate corner hinge [2]	Groove 9	100	6-28740-**-L-1	6-28740-**-R-1
with brake	Groove 13	100	6-28741-**-L-1	6-28741-**-R-1
Cover for rebate hinge [1]		100	9-37725-00-L-*	9-37725-00-R-*
Cover for rebate corner hinge [1]		100	9-42796-00-0-*	9-42796-00-0-*

[1] * Colour: 1 = EV 1, 5 = brown (RAL 8022), 7 = white (RAL 9016)
[2] ** Size 18, 20 or 22 according to sash overlap


Axle

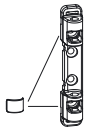
Screw hole cover [1]

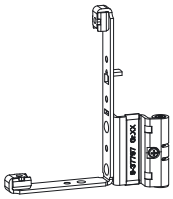
Rebate corner hinge with brake [2]


Cover – rebate hinge [1]

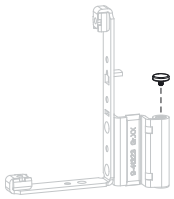
Cover for rebate corner hinge [1]

G.U-822, G.U-825

Application	Description	PU	Article No.
Assembly of corner bearing	Drilling jig for corner bearing	1	6-25831-01-0-9
Assembly of sash hinge, corner hinge	Drilling jig for sash hing 17/40 (K-13205-01)	1	6-25369-00-0-9
	Drilling jig for sash hing 17/45 (K-13205-03)	1	6-25996-03-0-0
	Drilling jig for sash hing 25/45 (K-13812-00)	1	6-25996-02-0-0
	Drilling jig for sash hing 17/17 (K-13813-00)	1	6-25996-01-0-0
	Rod for drilling jig 6-25369/6-25695	1	9-32596-00-0-3
	Stop for rod 9-32596	1	6-25371-00-0-9
Assembly of running rail and gliding rail	Drilling jig for running or gliding rail	1	6-23616-00-0-1
Assembly of folding catch	Drilling jig for folding catch	1	6-25575-00-0-9

UNI-JET C and D

Application	Description	PU	Article No.
Assembly of stay arm bearing 130 kg	**Tilt-turn, first tilt, side hung and tilt sash fittings**		
UNI-JET C	Drilling and mounting jig for stay arm bearing 130 kg 9-41710-00-0-1		
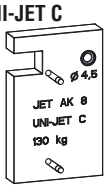	Sash overlap 18 mm	1	6-31591-00-0-6
	Sash overlap 20 mm	1	6-33776-00-0-6
Assembly of corner and stay arm bearings	Drilling jig for corner bearing and stay arm bearing, drill Ø 3 mm	1	6-27412-03-0-0
UNI-JET D	Drilling jig for corner bearing and stay arm bearing, drill Ø 3 and 6 mm	1	6-27412-53-0-0
Assembly of locking plates UNI-JET C and D	1 set of positioning jigs for locking plates, fixed gear position length of locking plate 55 mm	1	6-32644-00-0-0
	1 set of positioning jigs for locking plates, variable gear position length of locking plate 55 mm	1	6-32645-00-0-0
Assembly of turn handles UNI-JET C and D	Drilling jig for turn handle	1	6-22459-00-0-0
	Stop for 6-22459 – fixed gear position	1	9-27406-00-0-1
	Drilling jig with stop for gear AP 25 up to AP 50	1	6-25156-00-0-9

Order catalogue part 4
Slide fittings INLINE for aluminium windows and patio doors

Contents

The present catalogue part contains all slide fittings, flush pulls EURIS and accessories according to the latest state of the art.
The following indications will make you familiar with the concept of the catalogue and help you to handle it easily.

Catalogue structure

The present catalogue part is structured in the following way:
– Optional parts and turn handles
– Sets

Optional parts and turn handles

The option pages show you optional parts and turn handles for all slide fittings at a glance. All supplements of standard versions are clearly arranged.

Locking mechanisms INLINE

Fitting requirements per sliding sash
The illustrations of the locking mechanisms are supplemented by corresponding parts tables helping to determine the hardware composition.
Parts supplementing standard versions are clearly presented and can be easily selected.

Flush pulls and pull handles EURIS

All EURIS handles are illustrated and specified in separate tables.

Locking plates, latches

The choice of locking plates and latches depends on the profile system, please inquire.

Order numbers

The order number gives information about
– the article
– its size
– its application - e.g. DIN lh or DIN rh
– its colour/finish

Example
Order number
G-13954-03-0-1

G-13954- - -	Article number
- -01- -	Size
- - -L-	Left hand assembly
- - -R-	Right hand assembly
- - -0-	Usable on both sides
- - - -1	F 1/EV 1, natural (silver colour), fer**GU**ard*silver
- - - -2	F 2/EV 2, champagne colour
- - - -3	F 3, brass colour (gold colour)
- - - -4	UC 3, medium bronze (medium brown)
- - - -A	F 4, bronze colour
- - - -C	Titanium colour
- - - -5	UC 5, dark bronze (dark brown RAL 8022)
- - - -6	onyx matt (black RAL 9005)
- - - -7	white (RAL 9016)
- - - -7T	white (RAL 9010)
- - - -8	Stainless steel (stainless steel colour)
- - - -*	Surface treatment variable (available colours see price list)

Prices

Single part price list "Total programme"
The prices are listed by ascending article numbers.

Additional sales documentation

Apart from the order catalogue, the following documentation on slide-fold fittings is available:
– Brochures and leaflets informing about product features and advantages
– Presentation boards of all fitting versions
– Working drawings with mounting instructions
– Instructions for maintenance and care

Slide fittings INLINE
for aluminium windows and patio doors

Application

Range of applications for slide fittings INLINE:
– Slide doors with 3 to 2 sashes
– Slide windows with 3 to 2 sashes

Locking mechanisms INLINE

INLINE locking mechanisms are concealed in the rebate and provide for one handle operation. All locking parts are designed for the standard hardware groove of 16,3 mm width and 2,5 mm depth.
Gears with 15 or 7,5 mm backset for handle DIRIGENT or lockable gears with 15 mm backset prepared for the installation of a profile cylinder. The gears are provided with locking pins and anti-lift security device.

Locking plates and latches

Locking plates and latches according to profile system are specified for each project individually.

Turn handles DIRIGENT [1]

The handles are made of aluminium with concealed fixings. The rosettes have a robust retention feature and fixed cams. Lockable handles and handles for operation from both sides complete the programme.

Standard colours:

F 1/EV 1	silver colour
F 2/EV 2	new silver colour
F 3	gold colour
F 4	light brown
dark brown	dark brown (RAL 8022)
black	black (RAL 9005)
white	white (RAL 9016 or RAL 9010)

[1] More turn handles see part 3 of the present order catalogue.

Flush pulls EURIS

Flush pulls EURIS are supplied in the following standard colours:

EV 1	Aluminium parts anodized EV 1
UC 5	Aluminium parts anodized dark bronze
schwarz	Aluminium parts anodized black or black coated
weiß	Aluminium parts white coated

Further colours and finishes on request.

Materials, surface sealing fer**GU**ard*silver

The fitting parts are made of high quality steel, zinc die-casting or aluminium alloys.
Depending on the material, they are protected against corrosion by surface sealing with fer**GU**ard*silver or by anodisation (aluminium parts).

Standard surface sealing of slide fittings INLINE: fer**GU**ard*silber

All locking components of slide-fold fittings come with the surface sealing fer**GU**ard*silver.

Abbreviations

CB	Cylinder bore
G	Fixed gear position
ML	Middle lock
PU	Packing unit

Profile system manufacturers' information

It is important to observe the product information issued by the profile system manufacturers, especially information concerning construction and fabrication, maximum sash dimensions and weights and material features such as linear expansion of profiles.

Sash arrangement according to schemes A and D

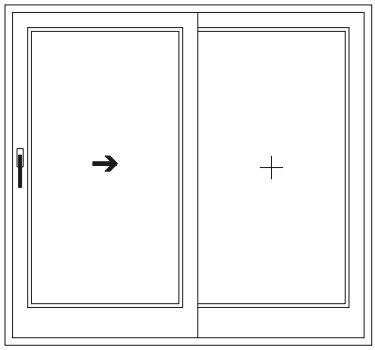

Scheme A
1 slide door, 1 fixed glazing
Drawing shows handle position lh

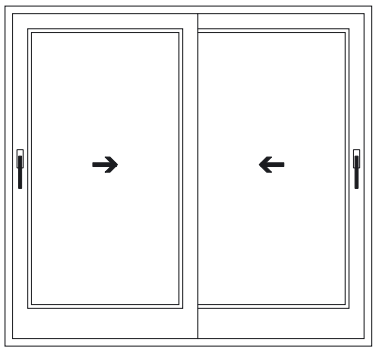

Scheme D
2 slide doors
Drawing shows handle position lh and rh

Assembly dimensions – frame and sash profile

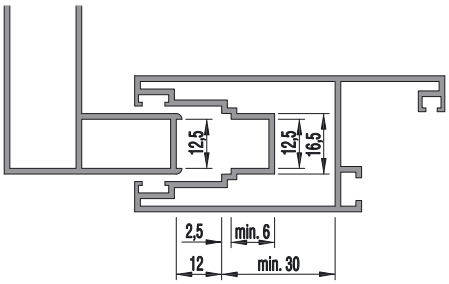

Frame and sash profile
Sash with fitting groove 16 mm

Drilling and milling dimensions

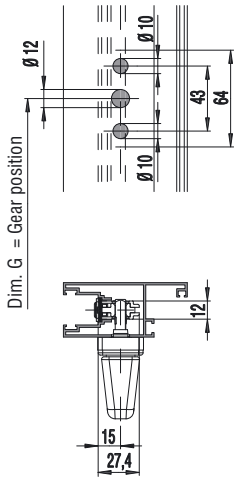

Dimensions for handles DIRIGENT
Drilling jig 6-22459-00-0-0
Stop 9-27406-00-0-1

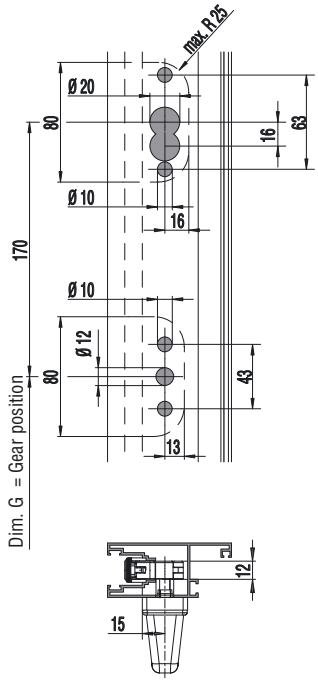

Dimensions for gears AP 25 up to AP 50
Drilling jig with stop 6-25156-00-0-9

Handles DIRIGENT-F [1]

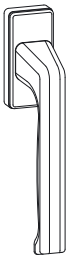

DIRIGENT-F
Spindle 25 6-28072-25-0-*
Spindle 29 6-28072-29-0-*
Spindle 33 6-28072-33-0-*

DIRIGENT-F/Z
with push button cylinder, all keys alike
Spindle 29 6-28075-29-0-*
Spindle 33 6-28075-33-0-*

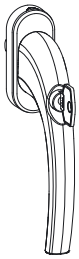

MODENA-F/Z 100 Nm [2]
for security windows and patio doors
Spindle 29 6-34397-29-0-*
Spindle 33 6-34397-33-0-*

DIRIGENT-F/SG
Spindle 50 8-00694-50-0-7

Rosette/F inside – flat
6-24913-00-0-*

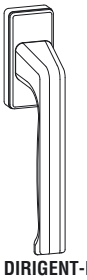

DIRIGENT-F
inside – without spindle
6-28072-00-0-*

DIRIGENT-F/AF,
outside – flat
6-25223-00-0-*

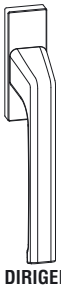

DIRIGENT-F/A,
outside
6-25993-00-0-*

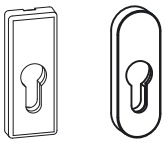

Rosette with CB inside
square K-17205-02-0-*
oval K-17204-02-0-*

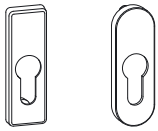

Rosette PZ/A outside
square 9-43605-02-0-*
oval 9-43582-02-0-*

Spindle
ST 56-68 9-26874-56-0-1
ST 69-80 9-26874-69-0-1

Inside/ outside operation
Countersunk screw M 5
ST 50-54 9-13255-60-0-1
ST 55-59 9-13255-65-0-1
ST 60-64 9-13255-70-0-1
ST 65-69 9-13255-75-0-1
ST 70-74 9-13255-80-0-1
ST 75-80 9-13255-85-0-1

Inside operation
Countersunk screw M 5
Spindle 25 9-13255-30-0-1
Spindle 29 9-13255-35-0-1
Spindle 33 9-13255-40-0-1

Knob lock
Backset 25 - 50 mm
K-13282-00-0-*

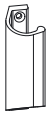

Pull handle outside
9-22921-00-0-*

[1] = More turn handles see part 3 of the present order catalogue.
[2] = Geprüft nach DIN V ENV 1627 auf 100 Nm gegen Abreißen und Abdrehen.

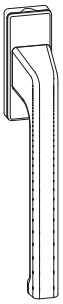

DIRIGENT-HL
elongated
Rosette 32 x 81 mm
Spindle 25 6-31382-25-0-*
Spindle 33 6-31382-33-0-*

DIRIGENT-HL
elongated
Rosette 32 x 81 mm
push button cylinder
Spindle 30 6-31383-30-0-*
Spindle 33 6-31383-33-0-*

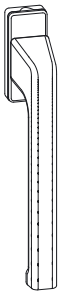

DIRIGENT-HL
elongated
Rosette 28 x 67 mm
Spindle 33 6-32629-33-0-*

Windows and patio doors with gear 15 for sash profiles with fitting groove 16 mm

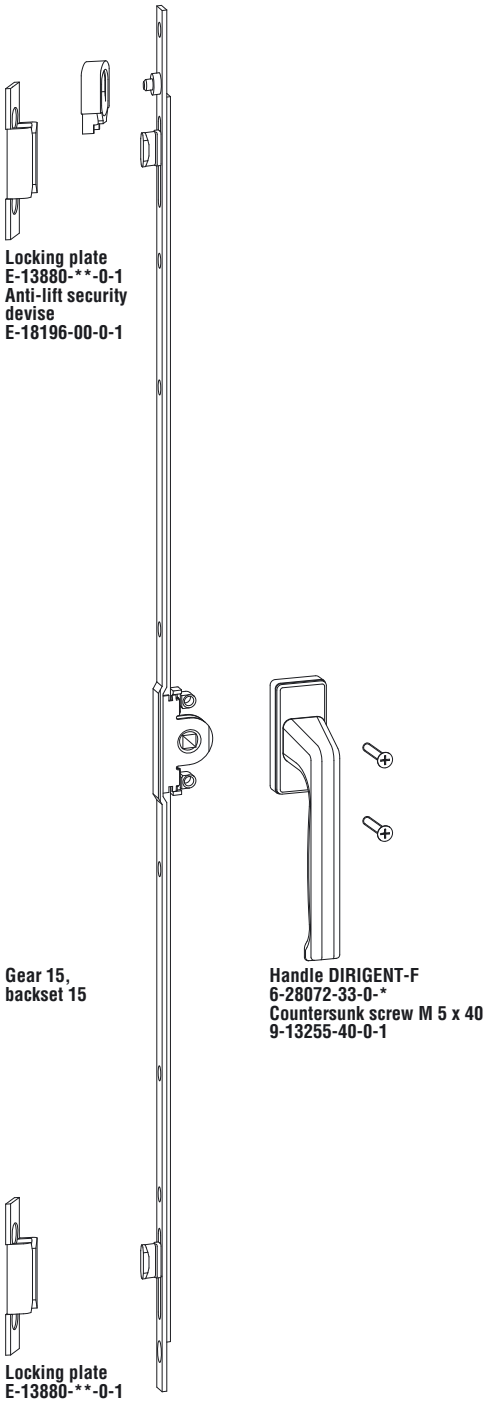

Sliding sash

Fitting requirements per sliding sash

Qty.	Description			PU	Article No.
1	**Gear 15, backset 15 mm**				
	Length	ML	G		
	300	1	110	10	G-13954-03-0-1
	600	2	300	10	G-13954-06-0-1
	1000	2	500	10	G-13954-10-0-1
	1600	2	800	10	G-13954-16-0-1
	1600	4	800	10	G-13954-26-0-1
1	**Anti-lift security devise**			100	E-18196-00-0-1
	Locking plate [2]			100	E-13880-**-0-1
	Gear length				
1	300				
2	600				
2	1000				
2	1600				
4	1600				
3	1800				
1	**Handle DIRIGENT-F** [1] [2]			20	6-28072-**-0-*
2	**Countersunk screw** M 5 x ** [2]			400	9-13255-**-0-1

[1] * = Colour: 11 = F 1/EV 1, 22 = F 2/EV 2, 3 = F 3, A = F 4,
5 = dark brown (RAL 8022), 7 = white (RAL 9016), C = titanium colour
[2] ** = Selection according to profile system – on request

Windows and patio doors with gear 7.5 for sash profiles with fitting groove 16 mm

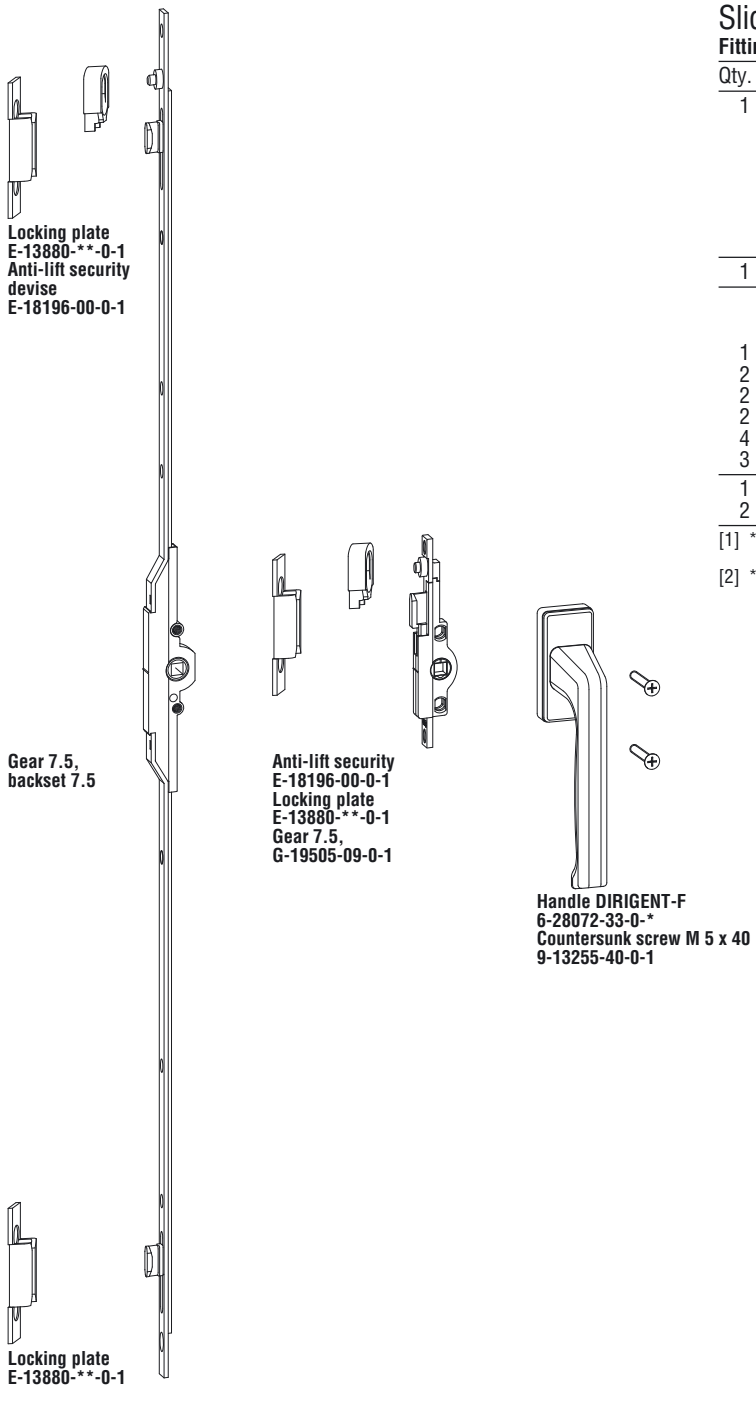

Sliding sash

Fitting requirements per sliding sash

Qty.	Description			PU	Article No.
1	**Gear 7.5, backset 7.5 mm**				
	Length	ML	G		
	125	1		10	G-19505-09-0-1
	600	2	300	10	G-15383-06-0-1
	1000	2	500	10	G-15383-10-0-1
	1600	2	800	10	G-15383-16-0-1
	1600	4	800	10	G-15383-26-0-1
1	**Anti-lift security devise**			100	E-18196-00-0-1
	Locking plate [2]			100	E-13880-**-0-1
	Gear length				
1	125				
2	600				
2	1000				
2	1600				
4	1600				
3	1800				
1	**Handle DIRIGENT-F** [1] [2]			20	6-28072-**-0-*
2	**Countersunk screw** M 5 x ** [2]			400	9-13255-**-0-1

[1] * = Colour: 11 = F 1/EV 1, 22 = F 2/EV 2, 3 = F 3, A = F 4,
5 = dark brown (RAL 8022), 7 = white (RAL 9016), C = titanium colour
[2] ** = Selection according to profile system – on request

Windows and patio doors with lockable gear 15 for sash profiles with fitting groove 16 mm

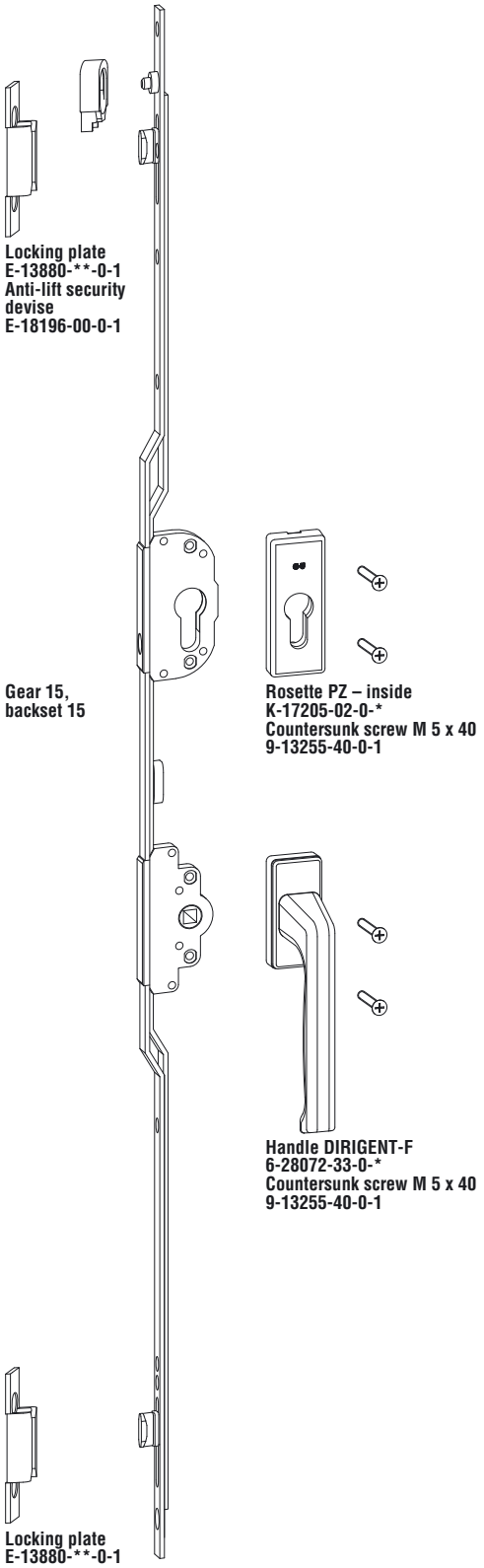

Sliding sash

Fitting requirements per sliding sash

Qty.	Description			PU	Article No.
1	**Gear 15 – lockable, backset 15 mm**				
	Length	ML	G		
	1600	2	800	10	G-15386-10-0-1
	1600	4	800	10	G-18330-10-0-1
1	**Anti-lift security devise**			100	E-18196-00-0-1
	Locking plate [2]			100	E-13880-**-0-1
	Gear length				
2	1600				
4	1600				
1	**Handle DIRIGENT-F** [1] [2]			20	6-28072-**-0-*
1	**Rosette PZ – inside** [1]			20	K-17205-02-0-*
4	**Countersunk screw** M 5 x ** [2]			400	9-13255-**-0-1

[1] * = Colour: 11 = F 1/EV 1, 22 = F 2/EV 2, 3 = F 3, A = F 4,
5 = dark brown (RAL 8022), 7 = white (RAL 9016), C = titanium colour
[2] ** = Selection according to profile system – on request

for sliding windows and patio doors

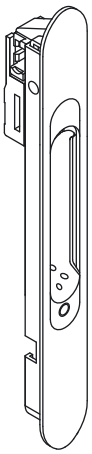

Flush pull EURIS – Type MA
G-46669-00-0-*

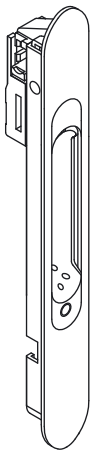

Flush pull EURIS – Type M1
G-46666-00-0-*

Flush pulls EURIS

Description	PU	Article No.
Flush pull EURIS – Type MA [1] Flush pull inside, automatic release – without latch dimension between axes 15 mm	20	G-46669-00-0-*
Flush pull EURIS – Type M1 [1] Flush pull inside, manual release – without latch dimension between axes 15 mm	20	G-46666-00-0-*

[1] * = Colour: 1E = anodized EV 1, 5E = anodized UC 5, 6E = anodized black, 6V = black (RAL 9005) coated, 7 = white (RAL 9016), 7T = white (RAL 9010) coated

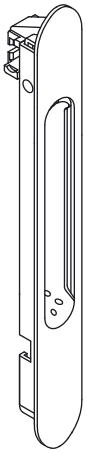

Flush pull EURIS – Type CF
G-19638-00-0-*

Flush pulls EURIS

Description	PU	Article No.
Flush pull EURIS – Type CF [1] Flush pull inside, fix	20	G-19638-00-0-*

[1] * = Colour: 1E = anodized EV 1, 5E = anodized UC 5, 6E = anodized black, 6V = black (RAL 9005) coated, 7 = white (RAL 9016), 7T = white (RAL 9010) coated

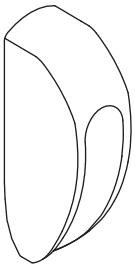

Pull handle inside – Type B1
G-19700-00-0-*

Accessories for flush pulls EURIS

Description		PU	Article No.
Pull handle inside – Type B1 [1]			
with 2 screws and 2 sleeves	black	20	G-19700-00-0-6
for fixing	white	20	G-19700-00-0-7

[1] Colour: 6 = PVC black, 7 = PVC white

for sliding windows and patio doors

Pull handles EURIS – outside – Type P2
G-46630-00-0-*

Pull handles EURIS – outside – Type P2B
G-19694-00-0-*

Pull handles EURIS – outside

Description	PU	Article No.
Pull handles EURIS – outside – Type P2 [1] without cylinder bore	20	G-46630-00-0-*
Pull handles EURIS – outside – Type P2B [1] with cylinder bore	20	G-19694-00-0-*

[1] * = Colour: 1E = anodized EV 1, 5E = anodized UC 5, 6E = anodized black, 6V = black (RAL 9005) coated, 7 = white (RAL 9016), 7T = white (RAL 9010) coated

Pull handles EURIS – outside – Type P1
G-19682-00-0-*

Pull handles EURIS – outside

Description	PU	Article No.
Pull handles EURIS – outside – Type P1 [1] with end caps	20	G-19682-00-0-*

[1] * = Colour: 1E = anodized EV 1, 5E = anodized UC 5, 6E = anodized black, 6V = black (RAL 9005) coated, 7 = white (RAL 9016), 7T = white (RAL 9010) coated

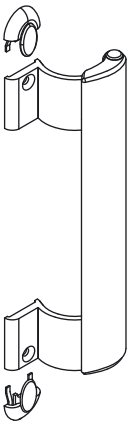

Pull handles EURIS – inside
G-20352-00-0-*

Pull handles EURIS – inside

Description	PU	Article No.
Pull handles EURIS – inside [1] with end caps and covers	20	G-20352-00-0-*

[1] * = Colour: 1E = anodized EV 1, 5E = anodized UC 5, 6E = anodized black, 6V = black (RAL 9005) coated, 7 = white (RAL 9016), 7T = white (RAL 9010) coated

for sliding windows and patio doors

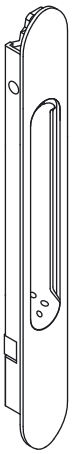

Pull handles EURIS – fix, outside – Type CE
G-19639-00-0-*

Pull handles EURIS – fix, outside

Description	PU	Article No.
Pull handles EURIS – fix, outside – Type CE [1] Profile thickness up to 35 mm	20	G-19639-00-0-*

[1] * = Colour: 1E = anodized EV 1, 5E = anodized UC 5, 6E = anodized black, 6V = black (RAL 9005) coated, 7 = white (RAL 9016), 7T = white (RAL 9010) coated

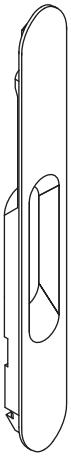

Pull handles EURIS – fix, outside – Type CEM
G-19941-00-0-*

Pull handles EURIS – fix, outside

Description	PU	Article No.
Pull handles EURIS – fix, outside – Type CEM [1] Profile thickness up to 27 mm	20	G-19941-00-0-*

[1] * = Colour: 1E = anodized EV 1, 5E = anodized UC 5, 6E = anodized black, 6V = black (RAL 9005) coated, 7 = white (RAL 9016), 7T = white (RAL 9010) coated

for sliding windows and patio doors

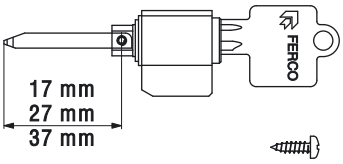

Bag of cylinder
G-46681--*-0**

Cylinder

Description	PU	Article No.
Bag of cylinder – standard differ, 17 mm with screws – for profile thickness 26 – 30 mm	1	G-46681-17-0-0
Bag of cylinder – all keys alike, 17 mm with screws – for profile thickness 26 – 30 mm	1	G-46681-17-4-0
Bag of cylinder – standard differ, 27 mm with screws – for profile thickness 30 – 38 mm	1	G-46681-27-0-0
Bag of cylinder – all keys alike, 27 mm with screws – for profile thickness 30 – 38 mm	1	G-46681-27-4-0
Bag of cylinder – standard differ, 37 mm with screws – for profile thickness 40 – 45 mm	1	G-46681-37-0-0
Bag of cylinder – all keys alike, 37 mm with screws – for profile thickness 40 – 45 mm	1	G-46681-37-4-0

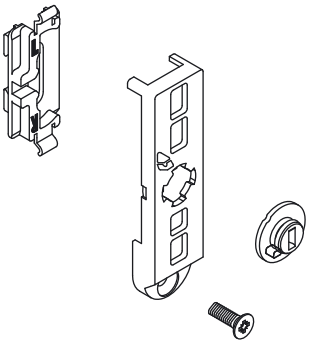

Cylinder kit
G-19628-00-0-0

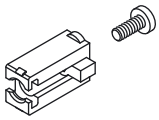

Bag of wrong operation safety device
G-46690--0-6**

Cylinder kit

Description	PU	Article No.
Cylinder kit for adaptation to inside pull (if a cylinder is used with the outside pull)	1	G-19628-00-0-0

Wrong operation safety device

Description	PU	Article No.
Bag of wrong operation safety device [1] Contents 1 wrong operation safety device, 1 screw	100	G-46690-**-0-6

[1] ** = Selection according to profile system – on request

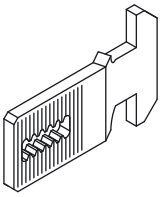

Bag of latch
E-19542--0-8**

Latch

Description	PU	Article No.
Bag of latch [1] for adaptation to inside pull (if a cylinder is used with the outside pull)	200	E-19542-**-0-8

[1] ** = Selection according to profile system – on request

Locking plate
E-12899-00-0-1

Locking plate
G-11337-00-0-1

Locking plates [1]

Description	PU	Article No.
Locking plate, screw-on version	100	E-12899-00-0-1
Locking plate, screw-on version	100	G-11337-00-0-1
Locking plate, screw-on version	100	E-12908-00-0-1
Locking plate	100	G-12898-00-0-1
Locking plate with nirosta clip	100	G-13945-00-0-1

[1] Selection according to profile system – on request

Locking plate
E-12908-00-0-1

Locking plate
G-12898-00-0-1

Locking plate
G-13945-00-0-1

Product group

F	**Lift-slide fittings**
A	**horizontal and vertical pivot fittings**

5

Lift-slide fittings, Horizontal and vertical pivot fittings

Introduction

Lift-slide fittings

Fitting requirements, sets

Drilling jigs

Introduction

Horizontal and vertical pivot fittings

Fitting requirements, sets

Order catalogue part 5
Lift-slide fittings for aluminium windows and patio doors

Contents

Part 5 of the present order catalogue contains all lift-slide fittings for aluminium windows and patio doors, thresholds, top guides and accessories according to the latest state of the art.
The following indications will make you familiar with the concept of the catalogue and help you to handle it easily.

Catalogue structure

The present catalogue part is structured in the following way:
– Optional parts and turn handles
– Sets
– Drilling and assembly tools

Optional parts and turn handles

The option pages show you optional parts and turn handles for all lift-slide fittings at a glance. All supplements of standard versions are clearly arranged.

Sets

Fitting requirements according to sash size and scheme
The illustrations of the fittings are supplemented by corresponding parts tables helping to determine the hardware composition.
Parts supplementing standard versions are clearly presented and can be easily selected.

Drilling and positioning jigs

Drilling jigs, positioning jigs and auxiliary tools for hardware assembly are grouped according to fitting types.

Order numbers

The order number gives information about
– the article
– its size
– its application - e.g. DIN lh or DIN rh
– its colour/finish

Example
Order number
6-30015-01-0-1

6-30015- - -	Article number
- -01- -	Size
- - -L-	Left hand assembly
- - -R-	Right hand assembly
- - -0-	Usable on both sides
- - - -1	F 1/EV 1, natural (silver colour), fer**GU**ard*silver
- - - -2	F 2/EV 2, champagne colour
- - - -3	F 3, brass colour (gold colour)
- - - -4	UC 3, medium bronze (medium brown)
- - - -A	F 4, bronze colour
- - - -C	Titanium colour
- - - -5	UC 5, dark bronze (dark brown RAL 8022)
- - - -6	onyx matt (black RAL 9005)
- - - -7	white (RAL 9016)
- - - -7T	white (RAL 9010)
- - - -8	Stainless steel (stainless steel colour)
- - - -*	Surface treatment variable (available colours see price list)

Prices

Single part price list "Total programme"
The prices are listed by ascending article numbers.

Additional sales documentation

Apart from the order catalogue, the following documentation on lift-slide fittings is available:
– Brochures and leaflets informing about product features and advantages
– Presentation boards of all fitting versions
– Working drawings with mounting instructions
– Instructions for maintenance and care

Lift-slide fittings for aluminium windows and patio doors

Application

Range of applications for G.U lift-slide fittings:
– Lift-slide patio doors with 2 to 4 sashes
– Lift-slide windows with 2 to 4 sashes

Designs

Lift-sliding fittings G.U-934
Fittings for single sashes up to 300 kg, with 4-wheel carriages and clamp fixed connecting bar. Wheels made of fabric reinforced laminated plastic with ball bearing. Lift-locking gear with 37.5 and 27.5 mm backset and cylinder bore.

Lift-sliding fittings G.U-937
Fittings for single sashes up to 150 kg, with 4-wheel carriages and clamp fixed connecting bar. Wheels made of fabric reinforced laminated plastic with ball bearing. Lift-locking gear with 37.5 and 27.5 mm backset and cylinder bore.

Handles

The DIRIGENT handles are made of aluminium with concealed fixings. Rosettes with robust retaining feature.
Standard version: handles without cylinder bore. Handles with cylinder bore, handles for operation on both sides with cylinder bore and removable handles complete the programme.

Adaptation of fittings

The adaptation of lift-slide fittings to various profile systems is effected by means of special spacers and packings.
These components are contained in the tables "Fitting requirements". An illustration of system related spacers and detailed mounting instructions are to be found in the corresponding working drawing.

Standard colours

Lift-slide fittings are supplied in the following standard colours:

EV 1	Visible aluminium parts anodised EV 1
EV 2	Visible aluminium parts anodised EV 2
UC 5	Visible aluminium parts anodised dark bronze
White	Visible aluminium parts white (RAL 9016)

Further colours and finishes on request.

Materials, surface sealing fer**GU**ard*silver

The fitting parts are made of high quality steel, zinc die-casting or aluminium alloys.
Depending on the material, they are protected against corrosion by surface sealing with fer**GU**ard*silver or by anodisation (aluminium parts).

Standard surface sealing of lift-slide fittings: fer**GU**ard*silver

Locking components and runners of lift-slide fittings come with the surface sealing fer**GU**ard*silver.

Abbreviations

CB	Cylinder bore
G	Fixed gear position
lh	left hand
PU	Packing unit
rh	right hand
SH	Sash height
ST	Sash thickness
SW	Sash width
TFW	Total frame width

Profile system manufacturers' information

It is important to observe the product information issued by profile system manufacturers, especially information concerning construction and fabrication, maximum sash dimensions and weights and material features such as linear expansion of profiles.

Application

Profile systems [1]	Sash arrangement Scheme [2] A	C	D	F	Fittings	Assembly drawing
Akotherm	•	•	•	•	G.U-934	0-39431-1
Albio Serie 230	•	•	•	•	G.U-934	0-44822-1
Alcoa RT 135	•	•	•	•	G.U-934	0-44417-1
Alumil Serie S 410	•		•		G.U-937	0-44694-1
Alumil Serie S 500	•		•		G.U-934	0-44685-1
Brökelmann Serie WG	•	•	•	•	G.U-934	
Forster (Belgium)	•		•		G.U-934	0-43992-1
Forster (Italy)	•	•	•	•	G.U-934	0-44559-1
Gartner	•	•	•	•	G.U-934	
Metra NC 150 STH	•	•	•	•	G.U-934	0-44415-1
Pontio Gastello	•	•	•	•	G.U-934	0-43821-1
Profilati (Italy)	•	•	•	•	G.U-934	0-44499-1
SAPA-RC Serie 125	•	•	•	•	G.U-934	0-44718-1
SAPA-ES 60	•		•		G.U-934	0-43376-1
Sykon	•		•		G.U-934	
	•		•		G.U-937	
Technal GXI	•		•		G.U-934	E-42971-1
Thyssen-Schulte TSB W 70	•		•		G.U-934	0-43138-1
VAW Profitherm	•		•		G.U-934	

[1] Further profile systems on request.
[2] Unstated Schemes on request.

Lift-slide fittings HS-*Master* for timber, PVC and aluminium patio doors

Application

HS-*Master* lift-slide fittings are applied:
- with lift-slide patio doors G.U-934 according to schemes A and C with HS-*Master* drive
- in domestic construction with high demands on operation
- with side entrances in projects frequented by the public, e.g. in gastronomy
- in buildings for the disabled where easy and safe operation is required
- in "barrier free construction"
- The installation in PVC and aluminium profiles requires sectional drawings of frame and sash profiles and must be clarified with G.U.

Design

Design and delivery
Compact drive unit made to measure in the following variants:
HS-*Master* in
- Standard design for
  - operation via handle / "Push and go function"
  - operation via switch (push-button switch on site)

Optional design with additional equipment for
  - operation via radio transmitter
  - the installation of a light barrier set for safe use
  - radio transmitter and light barrier set
  - the installation of a light curtain for safe use
  - radio transmitter and light curtain

  Each variant requires a push-button switch on site.

Operation

Ease of operation
- Lifting and opening to the desired position as well as closing are effected by motor.
- Very simple operation.

Various modes of operation
- Via handle or push-button
- Via remote control
- Via radar sensor.

Safe operation
- As a standard, the HS-*Master* drive is equipped with load interruption.
- Due to an optional light barrier, the sliding door does not close as long as persons or objects – e.g. wheel chairs – are within the light barrier zone.
- An optional light curtain installed on the gear side controls the total height of the door and prevents it from closing, as soon as persons or objects are caught by the light. Obstacles are recognised via memory function.
  Installation:
  - inside: in the drive casing
  - outside: in front of the sliding sash
- It is possible to operate the door by handle at any time (important in case of power failure).

Range of applications

Schemes	A	C
Min. length HS-*Master* drive	1900 mm	3800 mm
Sash width SW	950-3300 mm	950-3300 mm
Sash height SH	1855-2765 mm	1855-2765 mm
Sash weight	up to 300 kg	up to 300 kg

Handles

All handles of the lift-slide range can be used.

Retrofitting of lift-slide patio doors

Lift-slide units already installed can be retrofitted with HS-*Master.*
It only takes the following measures:

- The tilt-locking gear must be exchanged.
- Units with G.U-933 runners must be retrofitted with runners of the new lift-slide system G.U-934.

Barrier-free construction

What does barrier-free mean?

Barrier free construction means to prevent barriers and obstacles when planning and building entrances and movement areas in buildings (source: building lexicon).

Prescriptions and standards

The requirements to barrier-free construction are based on the respective prescriptions and standards of the Basic Constitutional Law as well as on the prescription for equalisation of disabled persons.
Planning guide for barrier-free construction in the public building sector: DIN 18024, part 1 and 2. Planning guide for barrier-free construction in the private housebuilding sector: DIN 18025, part 1 and 2. A respective draft has already been published.

Barrier-free construction with lift-slide fittings

Lift-locking gears with handle position 850 mm

By the use of lift-locking gears with variable handle position, the handle height may be adapted to individual requirements, so that the handles can be achieved easily, also from a sedentary position (e.g. from wheelchair drivers).

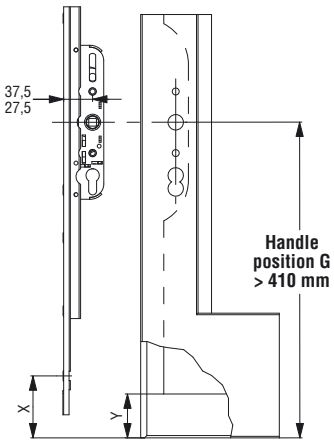

Order data

G = handle position
SH = sash height
Y = groove depth

X = bottom line of sash to first screw-hole of the cover rail
G.U-934 = Y + 23,5 mm
G.U-937 = Y + 35,5 mm

Article No.

Backset	Article No.
37,5 mm	6-30021-**-0-*
27,5 mm	6-30019-**-0-*

Extended turn handles RONDO made from stainless steel

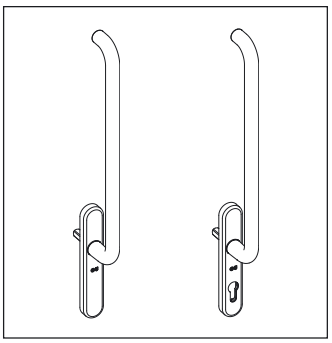

The extended handle RONDO is available as a special version for barrier-free construction.
Application: operation of sliding doors from a sedentary position.

Handle length 400 mm

Lift-slide fittings – sash arrangement according to schemes A to F [1]

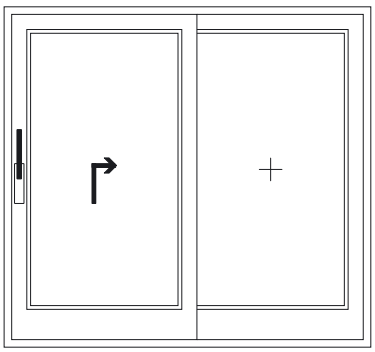

Scheme A
1 lift-slide door, 1 fixed glazing
Drawing shows left hand fittings

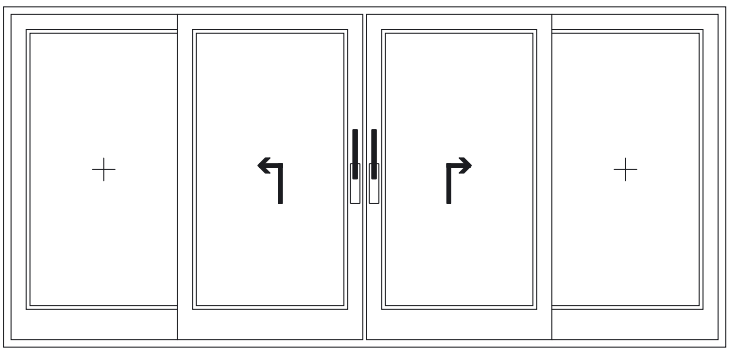

Scheme C
2 lift-slide doors, 2 fixed glazings
Drawing shows left hand and right hand fittings

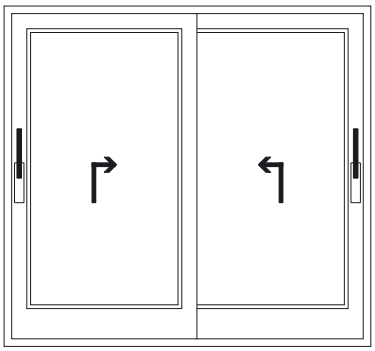

Scheme D
2 lift-slide doors
Drawing shows left hand and right hand fittings

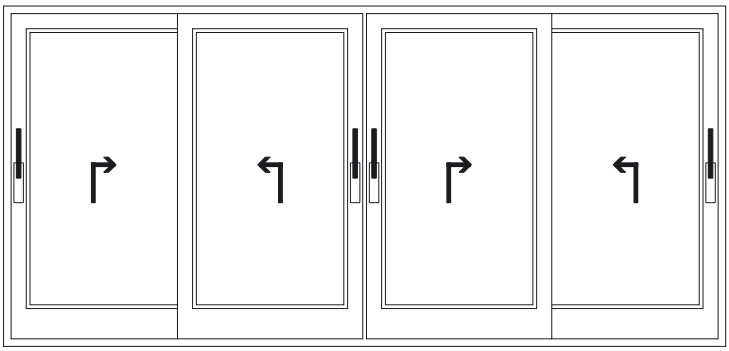

Scheme F
4 lift-slide doors
Drawing shows left hand and right hand fittings

[1] = The ordering pages of the catalogue show the fittings for schemes A and C. Fitting requirements for schemes D, F and G on request.

Assembly, drilling and milling dimensions

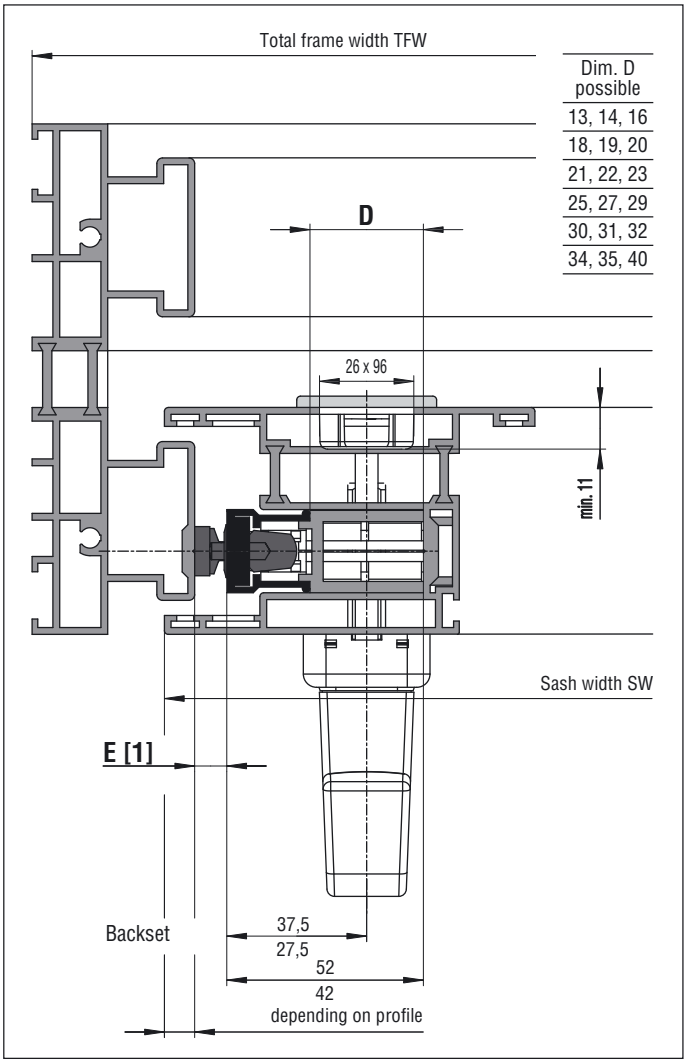

Lift-locking gears G.U-934, G.U-937

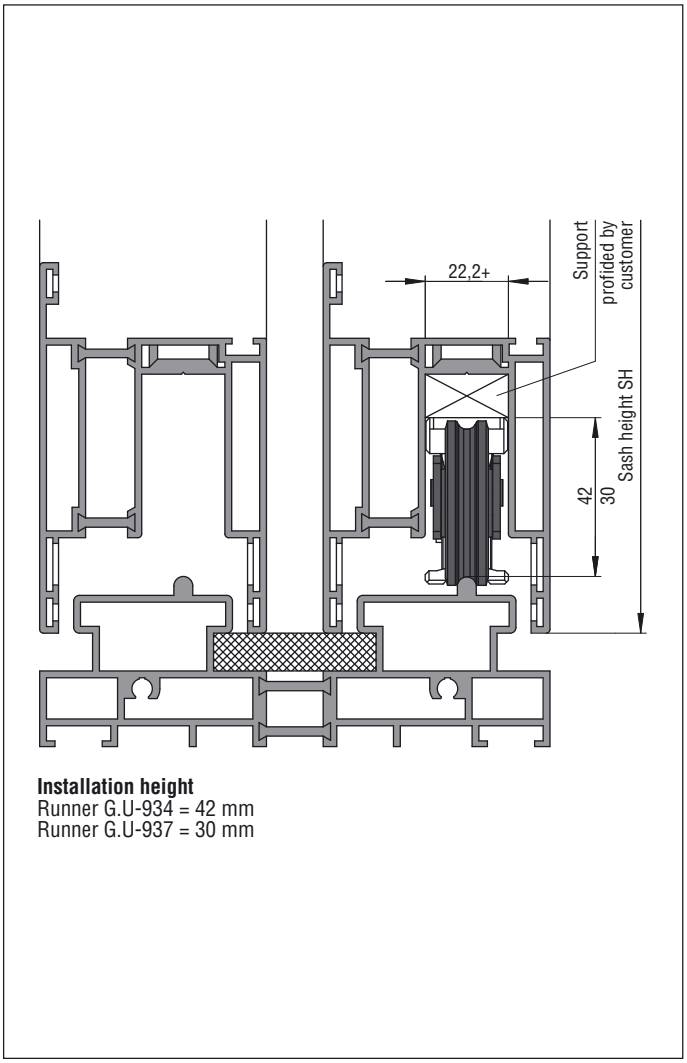

Installation height
Runner G.U-934 = 42 mm
Runner G.U-937 = 30 mm

Runner G.U-934, G.U-937

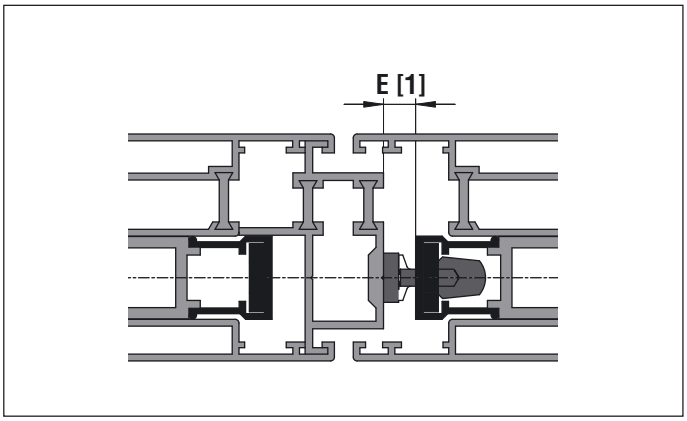

Meeting stile locking with schemes C and F

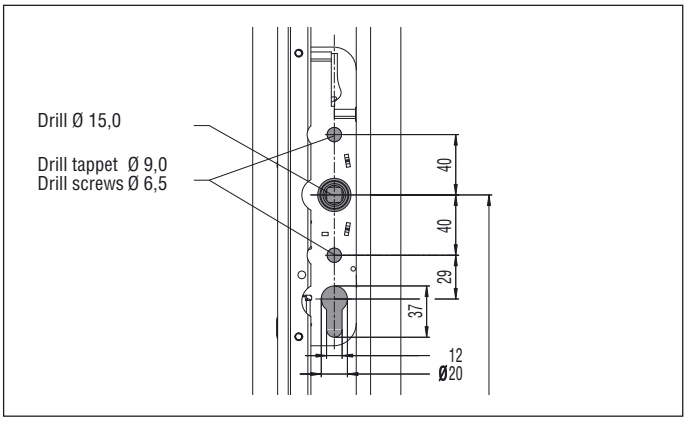

Drill pattern for handle
Drilling jig 9-27272-00-0-0

[1] Locking bolt according to dim. E

Dim. E mm	Locking bolt standard	Locking bolt slit ventilation
5,5	6-22648-01-0-1	9-43830-05-0-8
6,5	6-22648-02-0-1	9-43830-04-0-8
8,5	6-22648-03-0-1	9-43830-03-0-8
9,5	6-22648-04-0-1	9-43830-02-0-8
11,0	6-22648-05-0-1	9-43830-06-0-8
13,0	6-22648-06-0-1	9-43830-01-0-8

Dim. E mm	Locking bolt standard	Locking bolt slit ventilation
13,5	6-22623-01-0-1	
14,5	6-22623-02-0-1	
16,0	6-23309-00-0-1	
17,0	6-22623-03-0-1	9-29718-00-0-1
19,5	6-22623-04-0-1	
21,5	6-22623-05-0-1	

Handles DIRIGENT – Aluminium

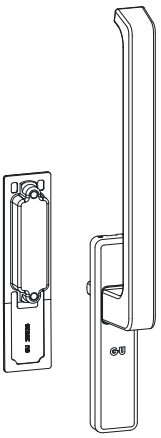

Handle length 240 mm

Lift-slide fittings

Handle inside – G.U-934/937
DIRIGENT without cylinder bore, without cams
Sash thickness up to 80 mm, adjustable spindle length
6-24608-00-0-*

Handle inside – G.U-934/937
DIRIGENT without cylinder bore, detent 90°
Sash thickness up to 80 mm, adjustable spindle length
6-24613-00-0-*

Flush pull (to order separately)

Milling depth mm	Article No.
17	**9-29526-00-0-***
14	**9-29992-00-0-***
14	**9-29992-01-0-***
13	**9-29992-02-0-***

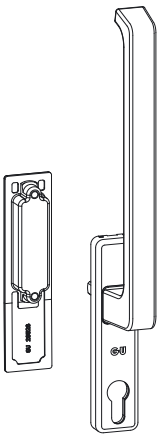

Handle length 240 mm

Lift-slide fittings

Handle inside – G.U-934/937
DIRIGENT with cylinder bore, without cams
Sash thickness up to 80 mm, adjustable spindle length
6-24609-00-0-*

Handle inside – G.U-934/937
DIRIGENT with cylinder bore, detent 90°
Sash thickness up to 80 mm, adjustable spindle length
6-24614-00-0-*

Flush pull (to order separately)

Milling depth mm	Article No.
17	**9-29526-00-0-***
14	**9-29992-00-0-***
14	**9-29992-01-0-***
13	**9-29992-02-0-***

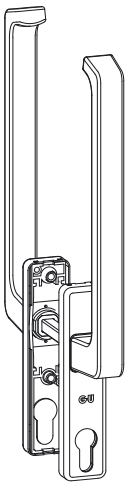

Handle length 240 mm

Lift-slide fittings

Handle on both sides – G.U-934/937
DIRIGENT with cylinder bore
Sash thickness up to 90 mm, adjustable spindle length
6-24615-96-0-*

Handle on both sides – G.U-934/937
DIRIGENT with cylinder bore, detent 90°
Sash thickness up to 90 mm, adjustable spindle length
6-24616-96-0-*

Handles DIRIGENT removable – Aluminium

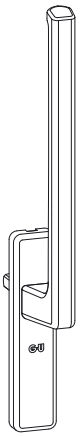

Contents:
1 handle DIRIGENT inside without cylinder bore
2 positioning pins

Handle length 240 mm

Lift-slide fittings

Handle inside – G.U-934/937
DIRIGENT without cylinder bore, without cams
Sash thickness up to 80 mm
K-17398-00-0-*

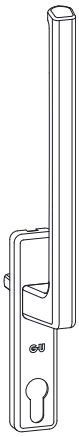

Contents:
1 handle DIRIGENT inside with cylinder bore
2 positioning pins

Handle length 240 mm

Lift-slide fittings

Handle inside – G.U-934/937
DIRIGENT with cylinder bore, without cams
Sash thickness up to 80 mm
K-17399-00-0-*

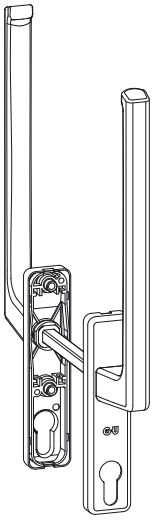

Contents:
1 handle DIRIGENT on both sides with cylinder bore

Handle length 240 mm

Lift-slide fittings

Handle on both sides – G.U-934/937
DIRIGENT with cylinder bore and cams
Sash thickness up to 90 mm
K-17400-00-0-*

Handles DIRIGENT HL for light units

Handle length 160 mm

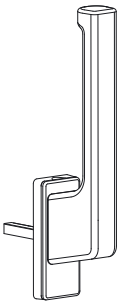

Lift-slide fittings

Handle inside – G.U-934/937
DIRIGENT HL, not lockable
Sash thickness up to 56 mm
Detent 180°
Rosette 32 x 81 6-31809-37-0-*

Bag of handle adapter
Contents:
1 screw-on disc
1 reduction sleeve
2 screws
K-16554-01-0-1

Application:
For sash weights up to 120 kg

Handle length 160 mm

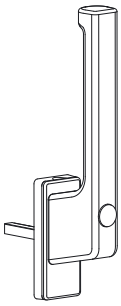

Lift-slide fittings

Handle inside – G.U-934/937
DIRIGENT HL, lockable
Sash thickness up to 56 mm
Detent 180°
Rosette 32 x 81 6-31810-37-0-*

Bag of handle adapter
Contents:
1 screw-on disc
1 reduction sleeve
2 screws
K-16554-01-0-1

Application:
For sash weights up to 120 kg

Handles DIRIGENT – Stainless steel

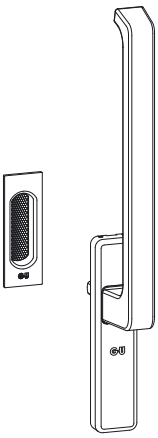

Contents:
1 handle DIRIGENT inside without cylinder bore
1 flush pull

Handle length 240 mm

Lift-slide fittings

Bag of handle inside – G.U-934/937
DIRIGENT, without cylinder bore
Sash thickness 68 mm
K-16804-00-0-8

Bag of handle inside – G.U-934/937
DIRIGENT, without cylinder bore, detent 90°
Sash thickness 68 mm
K-16867-00-0-8

Flush pull
9-42539-01-0-8

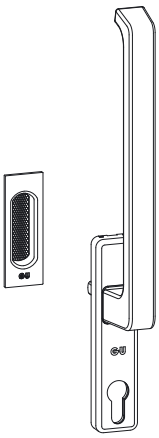

Contents:
1 handle DIRIGENT inside with cylinder bore
1 flush pull

Handle length 240 mm

Lift-slide fittings

Bag of handle inside – G.U-934/937
DIRIGENT with cylinder bore
Sash thickness up to 80 mm,
adjustable spindle length
K-16805-00-0-8

Bag of handle inside – G.U-934/937
DIRIGENT with cylinder bore, detent 90°
Sash thickness up to 80 mm,
adjustable spindle length
K-16865-00-0-8

Flush pull
9-42539-01-0-8

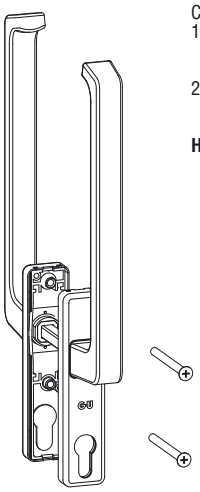

Contents:
1 handle DIRIGENT on both sides with cylinder bore
2 countersunk screws M 6 x 100

Handle length 240 mm

Lift-slide fittings

Bag of handle on both sides – G.U-934/937
DIRIGENTwith cylinder bore
Sash thickness up to 90 mm,
adjustable spindle length
K-16795-00-0-8

Bag of handle on both sides – G.U-934/937
DIRIGENT with cylinder bore, detent 90°
Sash thickness up to 90 mm,
adjustable spindle length
K-16861-00-0-8

Handles RONDO – Stainless steel

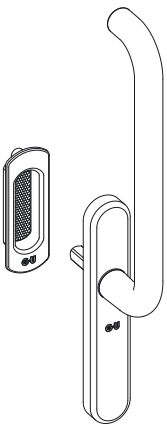

Contents:
1 handle RONDO inside without cylinder bore
1 flush pull

Handle length 240 mm

Lift-slide fittings

Bag of handle inside – G.U-934/937
RONDO, without cylinder bore
Sash thickness 68 mm
K-16807-00-0-8

Bag of handle inside – G.U-934/937
RONDO, without cylinder bore, detent 90°
Sash thickness 68 mm
K-16868-00-0-8

Flush pull
9-39035-01-0-8

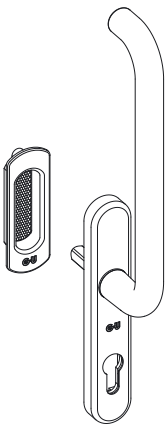

Contents:
1 handle RONDO inside with cylinder bore
1 flush pull

Handle length 240 mm

Lift-slide fittings

Bag of handle inside – G.U-934/937
RONDO with cylinder bore
Sash thickness up to 80 mm,
adjustable spindle length
K-16808-00-0-8

Bag of handle inside – G.U-934/937
RONDO with cylinder bore, detent 90°
Sash thickness up to 80 mm,
adjustable spindle length
K-16866-00-0-8

Flush pull
9-39035-01-0-8

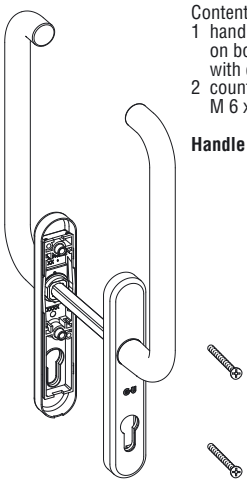

Contents:
1 handle RONDO on both sides with cylinder bore
2 countersunk screws M 6 x 100

Handle length 240 mm

Lift-slide fittings

Bag of handle on both sides – G.U-934/937
RONDO with cylinder bore
Sash thickness up to 90 mm,
adjustable spindle length
K-16798-00-0-8

Bag of handle on both sides – G.U-934/937
RONDO with cylinder bore, detent 90°
Sash thickness up to 90 mm,
adjustable spindle length
K-16864-00-0-8

Handles FORTE – Stainless steel

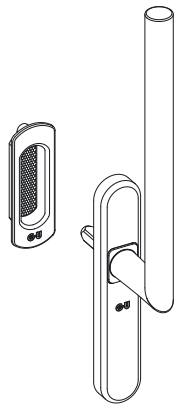

Contents:
1 handle FORTE inside without cylinder bore
1 flush pull

Handle length 240 mm

Lift-slide fittings

Bag of handle inside – G.U-934/937
FORTE without cylinder bore
Sash thickness 68 mm
K-17013-00-0-8

Bag of handle inside – G.U-934/937
FORTE without cylinder bore, detent 90°
Sash thickness 68 mm
K-17018-00-0-8

Flush pull
9-39035-01-0-8

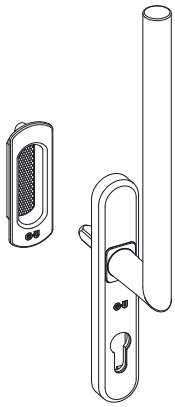

Contents:
1 handle FORTE inside with cylinder bore
1 flush pull

Handle length 240 mm

Lift-slide fittings

Bag of handle inside – G.U-934/937
FORTE with cylinder bore
Sash thickness up to 80 mm, adjustable spindle length
K-17014-00-0-8

Bag of handle inside – G.U-934/937
FORTE with cylinder bore, detent 90°
Sash thickness up to 80 mm, adjustable spindle length
K-17019-00-0-8

Flush pull
9-39035-01-0-8

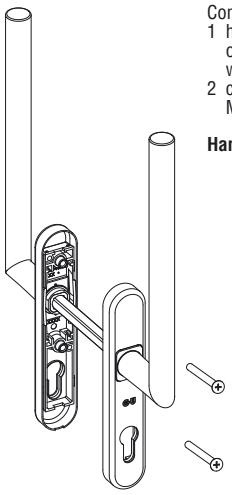

Contents:
1 handle FORTE on both sides with cylinder bore
2 countersunk screws M 6 x 100

Handle length 240 mm

Lift-slide fittings

Bag of handle on both sides – G.U-934/937
FORTE with cylinder bore
Sash thickness up to 90 mm, adjustable spindle length
K-17017-00-0-8

Bag of handle on both sides – G.U-934/937
FORTE with cylinder bore, detent 90°
Sash thickness up to 90 mm, adjustable spindle length
K-17022-00-0-8

5

Handles RONDO, elongated – Stainless steel

Handle length 400 mm

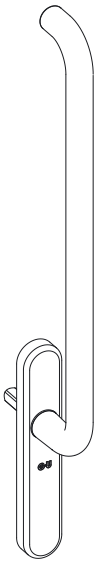

Lift-slide fittings

Handle inside – G.U-934/937
RONDO, without cylinder bore
Sash thickness 68 mm
K-17231-00-0-8 [1]

[1] alternatively: Colour 1, 5, 7

Handle length 400 mm

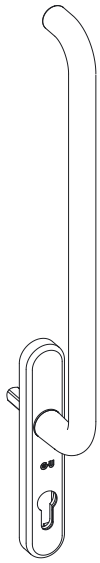

Lift-slide fittings

Handle inside – G.U-934/937
RONDO with cylinder bore
Sash thickness 68 mm
K-17232-00-0-8 [1]

[1] alternatively: Colour 1, 5, 7

Handles DIRIGENT – Polished brass

DIRIGENT Se

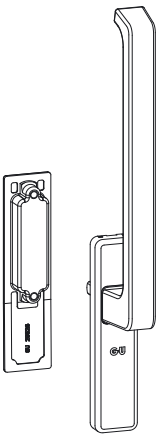

Handle lebgth 240 mm

Lift-slide fittings

Handle inside – G.U-934/937
DIRIGENT without cylinder bore
Sash thickness up to 80 mm, adjustable spindle length
6-26728-01-0-B

Handle inside – G.U-934/937
DIRIGENT without cylinder bore, detent 90°
Sash thickness up to 80 mm, adjustable spindle length
6-26729-01-0-B

Flush pull
(to order separately)
9-34957-00-0-3

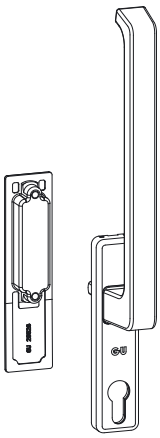

Handle lebgth 240 mm

Lift-slide fittings

Handle inside – G.U-934/937
DIRIGENT with cylinder bore
Sash thickness up to 80 mm, adjustable spindle length
6-26728-02-0-B

Handle inside – G.U-934/937
DIRIGENT with cylinder bore, detent 90°
Sash thickness up to 80 mm, adjustable spindle length
6-26729-02-0-B

Flush pull
(to order separately)
9-34957-00-0-3

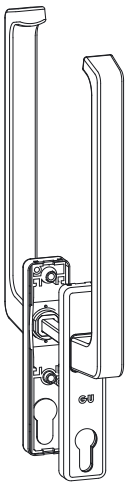

Handle lebgth 240 mm

Lift-slide fittings

Handle on both sides – G.U-934/937
DIRIGENT with cylinder bore
Sash thickness up to 90 mm, adjustable spindle length
6-26731-00-0-B

Handle on both sides – G.U-934/937
DIRIGENT with cylinder bore, detent 90°
Sash thickness up to 90 mm, adjustable spindle length
6-26732-00-0-B

Countersunk screw M 6
Sash thickness 45-90 mm
9-32789-10-0-1

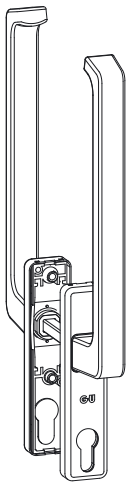

Handle lebgth 240 mm

Lift-slide fittings

Handle on both sides – G.U-934/937
DIRIGENT Se with cylinder bore
Sash thickness up to 90 mm, adjustable spindle length
6-24617-96-0-*

Handle on both sides – G.U-934/937
DIRIGENT Se with cylinder bore, detent 90°
Sash thickness up to 90 mm, adjustable spindle length
6-24618-96-0-*

Flush pull Se
(to order separately)
9-29622-00-0-*

Countersunk screw M 6
Sash thickness 45-90 mm
9-32789-10-0-1

Lift-slide fittings G.U-934/937

Handle length 240 mm

Removable handle DIRIGENT
6-24619-00-0-*

Rosette inside without cylinder bore
6-23243-01-0-*

Rosette inside with cylinder bore
6-23243-02-0-*

Flush pull
9-29526-00-0-*
9-29992-00-0-*
9-29992-01-0-*
9-29992-02-0-*

Flush pull
Stainless steel
9-42737-01-0-8

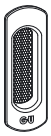

Flush pull
Stainless steel
9-39035-01-0-8

Rosette outside
9-29527-00-0-*

Countersunk screw M 6 – DIN 965
for handle on both sides

ST

-60 mm	M 6 x 75	9-13274-75-0-1
61-65 mm	M 6 x 80	9-13274-80-0-1
66-70 mm	M 6 x 85	9-13274-85-0-1
71-78 mm	M 6 x 90	9-13274-90-0-1

Countersunk screw M 6
Sash thickness
45-90 mm
9-32789-10-0-3

Bag of cover disc
K-17481-00-0-*
*** -1 = EV 1 colour**
*** -5 = UC 5 colour**
*** -6 = black**
*** -7 = white**
*** -8 = stainless steel colour**

Contents
1 Cover disc
1 Sleeve
1 Countersunk sheet metal screw 3,9 x 13

Spindle 10 mm
for handles with adjustable spindle length
Sash thickness up to 100 mm
9-24377-60-0-1

Lift-slide fittings G.U-934, G.U-937

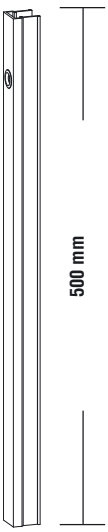

Cover rail extension
9-28483-05-0-*

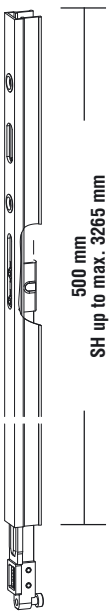

Gear extension
6-32030-00-0-*

Tension spring for sashes > 200 kg
9-40235-05-0-0

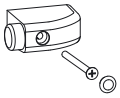

Bag of stop 90
K-17134-00-0-*
*** -6 = black**
*** -7 = white**

Anti-drill escutcheon for lift-locking gear
Backset
37,5 9-41309-02-0-0
27,5 9-41309-01-0-0
AD 0-44187

Bag of bottom keeper with hexagonal screw for slit ventilation
K-11929-00-0-1

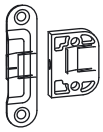

Bag of vertical middle lock
SC 10 K-11864-00-0-1
SC 28 K-17132-00-0-1
AD 0-36943

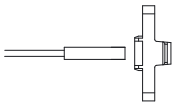

Bag of monitoring locking status
K-16752-00-0-0
AD 0-44449

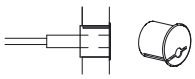

Excentric plug
6-33079-00-0-*

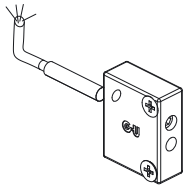

Bag of monitoring locking status Scheme C
K-17322-00-0-0
AD 0-44768

Anti-lift security

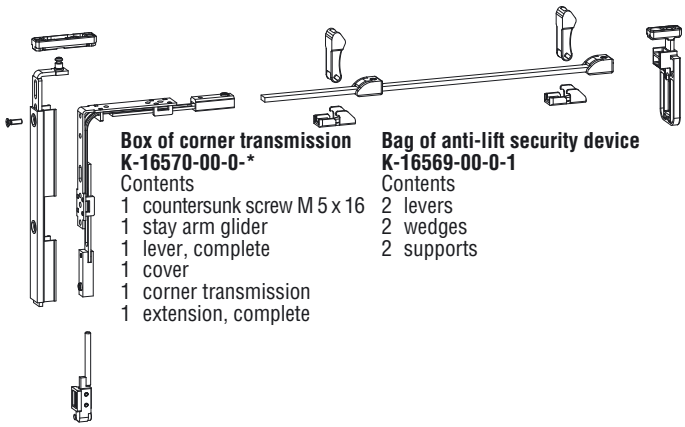

Box of corner transmission
K-16570-00-0-*
Contents
1 countersunk screw M 5 x 16
1 stay arm glider
1 lever, complete
1 cover
1 corner transmission
1 extension, complete

Bag of anti-lift security device
K-16569-00-0-1
Contents
2 levers
2 wedges
2 supports

Fitting requirements
according to size of sashes for schemes A to G

Quantity A	C	D	G	Description		PU	Article No.
1	2	2	1	**Box of corner transmission**		1	K-16570-00-0-*
1	2	2	1	**Bag of anti-lift sec. device**		1	K-16569-00-0-1
1	2	2	1	**Rear guide**		1	6-23297-00-0-0
1	2	2	1	**Connecting bar P 959**			
				FB	Länge		
				600-1220	1000	1	9-28355-10-0-1
				1221-1720	1500	1	9-28355-15-0-1
				1721-2020	1800	1	9-28355-18-0-1
				2021-3000	2600	1	9-28355-26-0-1

AD 0-44267

Bag of meeting stile gasket HS

Meeting stile gasket HS

Bag of meeting stile gasket HS

Description	Sash clearance SC mm	Length L mm	Article No.
HS 25/29 WK	25 - 29	2400	K-15799-24-0-*
HS 25/29 WK	25 - 29	2900	K-15799-29-0-*
HS 16/20 WK	16 - 20	2400	K-15798-24-0-*
HS 16/20 WK	16 - 20	2900	K-15798-29-0-*
HS 10 WK	10	2400	K-15797-24-0-*
HS 10 WK	10	2900	K-15797-29-0-*

Bag of extension for meeting stile gasket HS

Description	Sash clearance FA mm	Length L mm	Article No.
HS 25/29 WK	25 - 29	500	K-16857-00-0-*
HS 16/20 WK	16 - 20	500	K-16856-00-0-*
HS 10 WK	10	500	K-16855-00-0-*

Lift-slide fittings G.U-934

Runner for sashes up to 400 kg – G.U-934

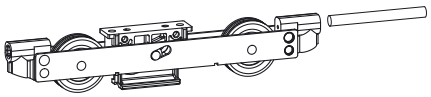

Additional runner **Rod**

Box of tandem runner – G.U-934
for sashes up to 400 kg
K-17804-01-0-1 **PU 1**

Contents:
2 additional runners 6-30016-01-0-1

additional:
2 rods Ø 8 mm, length 65 mm
(to be cut from connecting rod 9-25476--0-1)**
AD 0-44455

Quantity required
1 set per sliding sash

Note:
For maximum sash weights it is important to observe the profile manufacturer's instructions.

Support runner V

Bag of support runner G.U-934
for V running rail
K-17455-02-0-1 **PU 1**

Contents:
2 support runner V
9-43614-02-0-1

Support runner R 2,5

Bag of support runner G.U-934
for running rail R 2,5
K-17455-03-0-1 **PU 1**

Contents:
2 support runner R 2,5
9-43614-03-0-1

Packings for runner – G.U-934

Description	Depth mm	Runner, front Article No.	Runner, rear Article No.
Packing	1,0	9-41680-00-0-1	9-41681-00-0-1
Packing	2,0	9-41680-02-0-1	9-41681-02-0-1
Packing	5,0	9-41680-05-0-1	9-41681-05-0-1
Packing	6,0	9-41680-06-0-1	9-41681-06-0-1

for lift-slide units with heavy sashes

Safe operation of large and heavy units

Advantages:
- The HS Speed Limiter prevents heavy sashes from accelerating, thus avoiding damage to
  - Persons
  - Property and to parts of the structure
- Unrestricted convenience of operation
- Easy assembly; also suited for subsequent assembly
- Especially suited for the use in public buildings, e.g. schools
- For timber, PVC and aluminium units

Range of application

Sash width	max. 3300 mm [1]
Sash height	max. 2765 mm [1], [2]
Sash weight	max. 400 kg [1]
Sash arrangement	Schemes A and C

[1] Adapted to lift-slide fittings G.U-934
[2] Adapted to lift-slide fittings G.U-937

Fitting requirements according to sash width for schemes A and C

Qty. A	Qty. C	Description		PU	Article No.
1	2	**Basic box HS-*SPEED Limiter***			
		Sash weight up to 400 kg		1	K-17179-20-0-1
		Bag of profile HS-*SPEED Limiter*			
		SW	TFW		
1		-1450	- 3000	1	K-17180-30-0-*
	1		- 6700	1	K-17180-67-0-*
1		1451-1700	3001- 3500	1	K-17180-35-0-*
	2		6701- 7000	1	K-17180-35-0-*
1		1701-1950	3501- 4000	1	K-17180-40-0-*
	2		7001- 8000	1	K-17180-40-0-*
1		1951-2200	4001- 4500	1	K-17180-45-0-*
	2		8001- 9000	1	K-17180-45-0-*
1		2201-2450	4501- 5000	1	K-17180-50-0-*
	2		9001-10000	1	K-17180-50-0-*
1		2451-3300	5001- 6700	1	K-17180-67-0-*
	2		10001-13400	1	K-17180-67-0-*

Remark:
Scheme A = Scheme D inside sash
Scheme C = Scheme F inside sash

5

Interior view

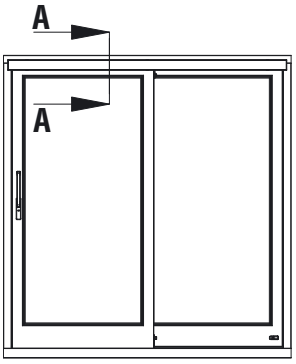

Section A – A

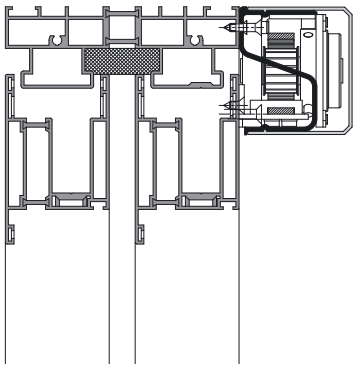

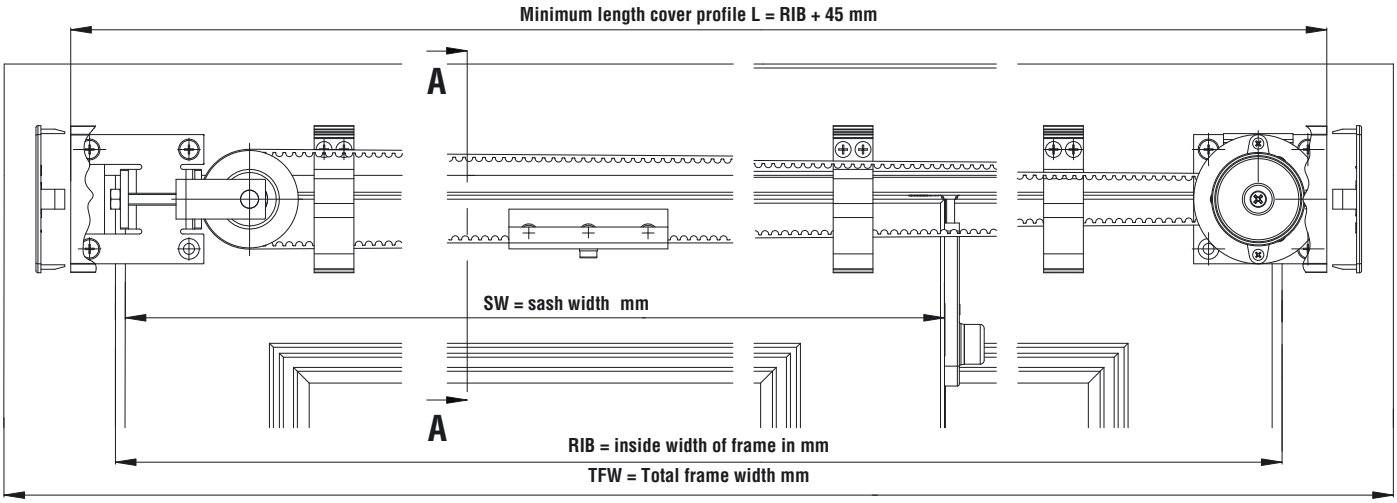

for lift-slide fittings G.U-934 – sash clearance 28 and 10 mm

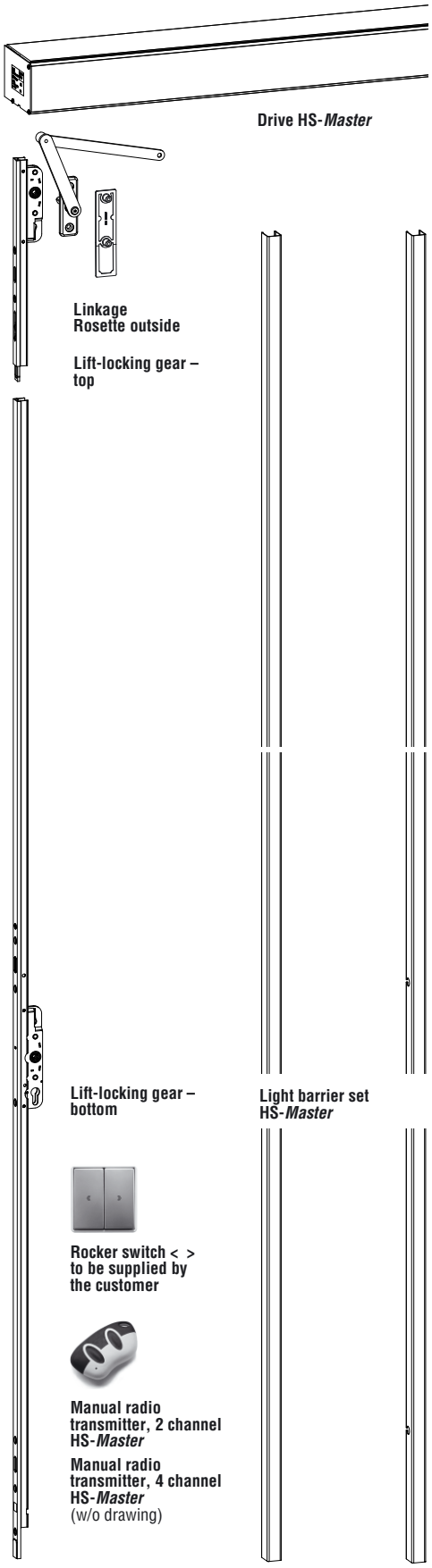

Lift-slide fittings HS-*Master*

Fitting requirements for scheme A and C

Qty. A	Qty. C	Description		PU	Article No. Scheme A	Scheme C
I.		**Drive HS-*Master* – standard version**				
1	1	**Drive HS-*Master*** [1] Standard version for – operation via handle / "Push and go function" – operation via rocker switch (switch supplied by customer) Manufacture according to order specification	230 V 110 V	1 1	6-32205-98-L/R-* 6-33283-98-L/R-*	6-33625-98-L/R-*
		alternatively: **Drive HS-*Master*** [1] same as standard version, but additionally prepared for operation via manual radio transmitter (radio receiver and 1 transmitter installed – further transmitters as accessories)	230 V 110 V	1 1	6-32654-98-L/R-* 6-33284-98-L/R-*	6-33626-98-L/R-*
II.		**Drive HS-*Master* with light barrier set**				
1	–	**Drive HS-*Master*** [1] same as standard version, but additionally prepared for installation of light barrier set	230 V 110 V	1 1	6-32650-98-L/R-* 6-33285-98-L/R-*	
		alternatively: **Drive HS-*Master*** [1] same as standard version, but additionally prepared for operation via manual radio transmitter (radio receiver and 1 transmitter installed – further transmitters as accessories) and for installation of light barrier set	230 V 110 V	1 1	6-32651-98-L/R-* 6-33286-98-L/R-*	
1	–	**Light barrier set HS-*Master***	230/110 V	1	K-16772-00-0-*	
		Contents: 2 light barrier rail, lh / rh 2 light barrier – transmitter, 2 light barrier – receiver 8 guides				
III.		**Drive HS-*Master* with light curtain**				
1	–	**Drive HS-*Master*** [1] same as standard version, but additionally prepared for installation of light curtain inside	230 V 110 V	1 1	6-32652-98-L/R-* 6-33287-98-L/R-*	
		alternatively: **Drive HS-*Master*** [1] same as standard version, but additionally prepared for operation via manual radio transmitter (radio receiver and 1 transmitter installed – further transmitters as accessories) and for installation of light curtain inside	230 V 110 V	1 1	6-32653-98-L/R-* 6-33288-98-L/R-*	
1		**Light curtain HS-*Master* – outside**	230/110 V	1	6-32640-00-0-0	
Components generally required with versions I, II and III						
1	2	**Box of linkage HS-*Master*** [1] Contents: 1 linkage, 1 rosette outside 1 fixing material		1	K-16750-00-0-*	K-16750-00-0-*
1	2	**Box of lift-locking gear HS-*Master*** Sash height SH = 1855-2765 mm Contents: 2 lift-locking gear HS-*Master*, top / bottom 1 connecting bar 1 drilling jig		1	K-16748-00-0-1	K-16748-00-0-1
–	1	**Bag of accessories** – according to profile system			(on request)	(on request)
1	2	**Lift-slide fittings G.U-934** without lift-locking gear				

[1] * Colour: 1 = EV 1, 5 = UC 5, 7 = white

Accessories for HS-*Master*

Fitting requirements for scheme A and C

Qty.	Description	Colour	PU	Article No.	
1*	**Manual radio transmitter HS-*Master*** 2 channel with G.U specific coding for HS-*Master* with radio receiver	grey-blue grey-burgundy grey-anthrazit grey-red	1 1 1 1	6-32264-01-0-0 6-32264-02-0-0 6-32264-03-0-0 6-32264-04-0-0	6-32264-01-0-0 6-32264-02-0-0 6-32264-03-0-0 6-32264-04-0-0
	alternatively: **Manual radio transmitter HS-*Master*** 4 channel	grey-yellow	1	6-33788-00-0-0	6-33788-00-0-0
1	**Radio receiver card HS-*Master***		1	6-32627-00-0-0	
2	**Radar sensor HS-*Master***		1	A-7032830	
1	**Rocker switch < > – to be supplied by the customer** – Make: JUNG 535 U or equivalent				

* = min. 1 units, max. 85 units possible

Security functions

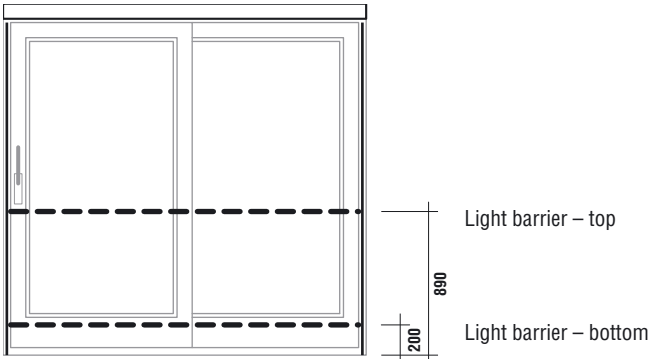

Safe operation with light barrier

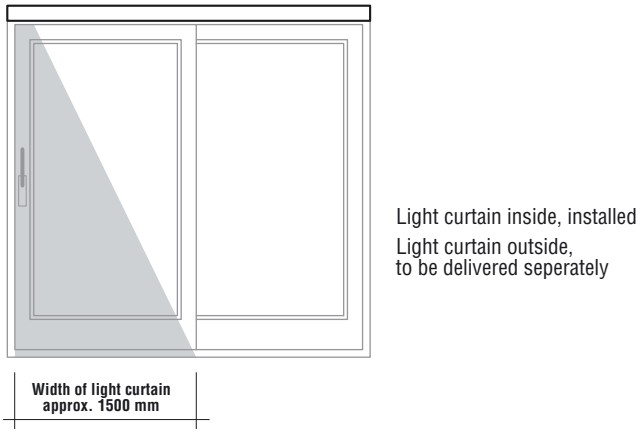

Safe operation of HS-*Master* with light curtain
Inside curtain installed, outside curtain delivered seperately

Order references

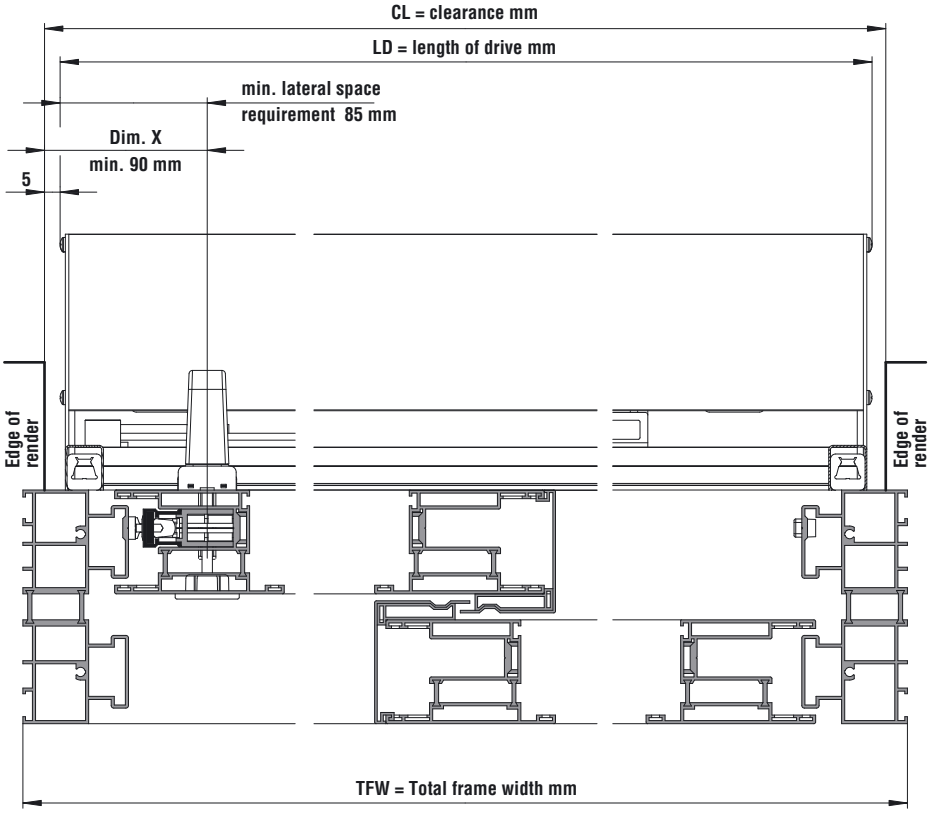

Interior view

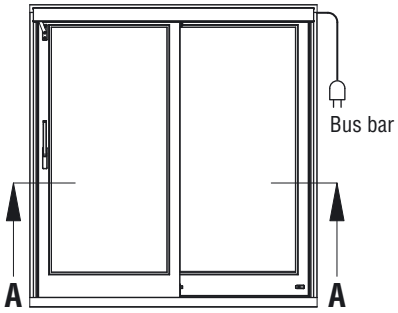

Section A – A (Drawing shows left-hand active sash)

Description			Dimensions mm
Length of drive	**LD**	**=**	
Dim. X (min. 90)	**X**	**=**	
Position of handle			[ ] lh [ ] rh
Clearance	CL	=	
Total frame width	TFW	=	
Sash width	SW	=	
Sash height	SH	=	

Specification of profile	
Manufacturer	
Profile series	

Range of applications

Scheme	A
Min. length HS-*Master* drive	1900 mm
Sash width SW	950-3300 mm
Sash height SH	1855-2765 mm
Sash weight	up to 300 kg

Interior view

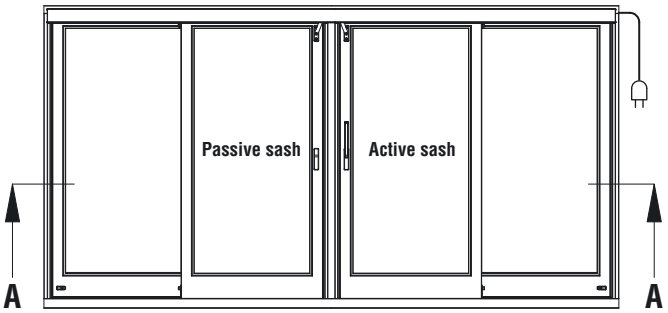

Power connection on
active sash side

Order references

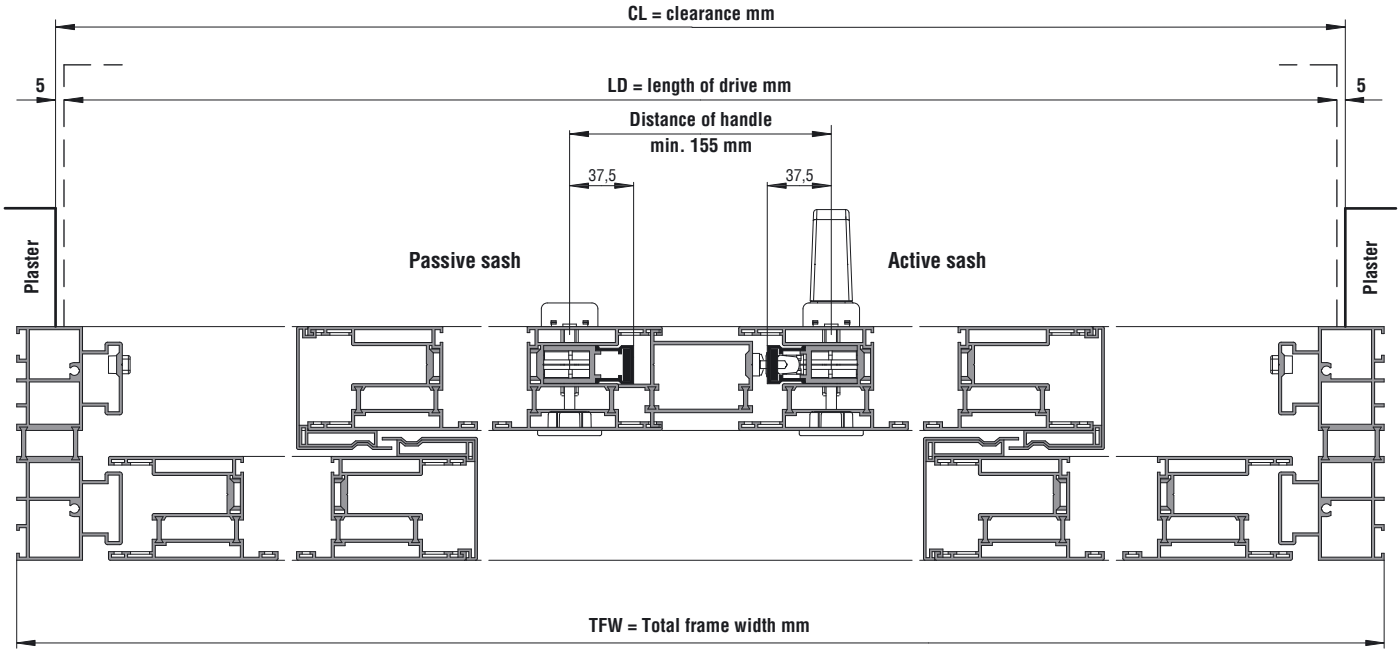

Section A – A (Drawing shows left-hand active sash)

Description			Dimensions mm
Length of drive	**LD**	**=**	
Distance of handle	**GA**	**=**	
Position of handle active sash			[ ] lh [ ] rh
Clearance	CL	=	
Total frame width	TFW	=	
Sash width	SW	=	
Sash height	SH	=	
Sash thickness	ST	=	
Sash clearance	SC	=	

Specification of profile	
Manufacturer	
Profile series	

Range of applications

Scheme	C
Min. length HS-*Master* drive	3800 mm
Sash width SW	950-3300 mm
Sash height SH	1855-2765 mm
Sash weight	up to 300 kg

Lift-slide fittings G.U-934 according to profile system

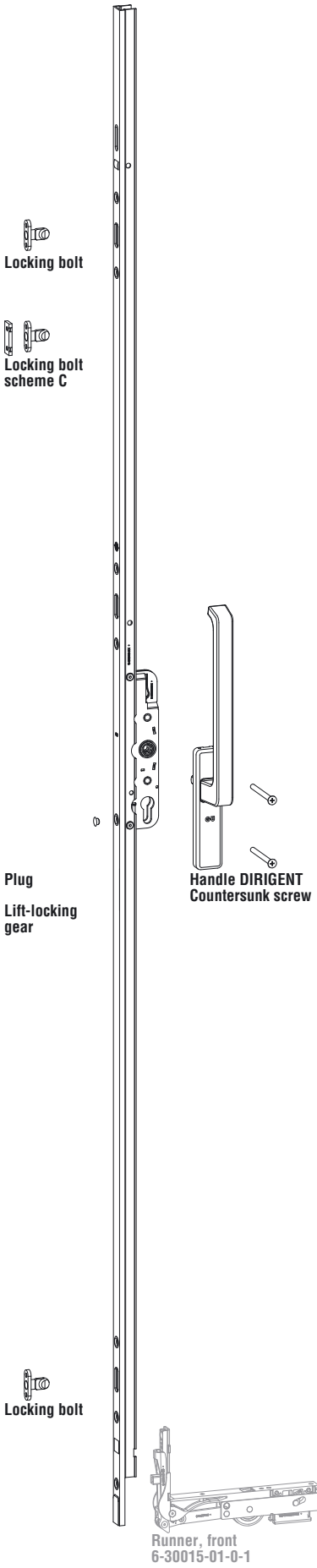

Fitting requirements according to size of sashes for schemes A to F

Quantity A	C	D	F	Description	PU	Akotherm	Albio Serie 230	Alcoa RT 135
1	2	2	4	**Box of runners – G.U-934/954**	1	K-16488-00-0-1	K-16488-00-0-1	
1	2	2	4	**Additional box G.U-934**	1	K-16934-00-0-0	K-17482-00-0-0	K-17007-00-0-0
1	2	2	4	**Bag of packing runners G.U-934**	1			K-17847-00-0-0
1	2	2	4	**Handle DIRIGENT** [1]	1	6-24607-00-0-*	6-24608-00-0-*	6-24607-00-0-*
1	2	2	4	**Flush pull** [1]	1	9-29992-01-0-*	9-29992-01-0-*	9-29992-01-0-*
	2		2	Locking bolt	1	6-22648-01-0-1	6-22648-01-0-1	K-13391-00-0-0
	2		2	Fixing platte	1		9-24414-00-0-0	
	4		4	Countersunk screw M 5 x 55	1		9-13133-55-0-0	
				Optional parts				
2	4	2	4	Bag of stop 90 [1]	1		K-17134-00-0-*	K-17134-00-0-*
1	2	2	4	**Lift-locking gear G.U-934** [1] [2]				
				Length G [3] Article No.		SH	SH	SH
				1190 ~ 410 6-30021-11-0-*	10	750-1295	825-1245	787-1332
				1770 ~ 410 6-30021-19-0-*	10	1165-1795	1195-1825	1202-1832
				2270 ~1010 6-30021-24-0-*	10	1795-2295	1825-2325	1832-2332
				2670 ~1010 6-30021-28-0-*	10	2045-2695	2075-2725	2082-2732
1	2	2	4	**Connecting bar Ø 8**				
				Length Article No.		SW	SW	SW
				1100 9-25476-11-0-1	10	700-1600	700-1600	700-1600
				1350 9-25476-14-0-1	10	1601-1850	1601-1850	1601-1850
				1850 9-25476-18-0-1	10	1851-2350	1851-2350	1851-2350
				3300 9-25476-33-0-1	10	2351-3300	2351-3300	2351-3300

[1] * = Colour: 1 = EV 1, 2 = EV 2, 5 = UC 5, 7 = white (RAL 9016)
[2] = Up to 200 kg sash weight with tension spring 9-40235-05-0-0 [3] = Exact handle position depending on profile dimension

5

Fitting requirements according to size of sashes for schemes A to F

Quantity A	C	D	F	Description	PU	Alumil Serie S 500	Forster (Belgium)	Forster (Italy)
1	2	2	4	**Box of runners – G.U-934/954**	1	K-16488-00-0-1	K-16488-00-0-1	K-16488-00-0-1
1	2	2	4	**Additional box G.U-934**	1	K-17464-00-0-0	K-17467-00-0-0	K-17121-00-0-1
1	2	2	4	**Handle DIRIGENT** [1]	1	6-24608-00-0-*	6-24607-00-0-*	6-24607-00-0-*
1	2	2	4	**Flush pull** [1]	1	9-29992-02-0-*	9-29992-01-0-*	
	2		2	Fixing platte	1			9-24414-00-0-0
	2		4	Rubber buffer 60	1			9-23793-00-0-0
				Optional parts				
2	4	2	4	Bag of stop 90 [1]	1	K-17134-00-0-*	K-17134-00-0-*	K-17134-00-0-*
1	1	2	2	Bag of bottom keeper	1		K-12057-00-0-1	K-12057-00-0-1
1	2	2	4	**Lift-locking gear G.U-934** [1] [2]				
				Length G [3] Article No.		SH	SH	SH
				1190 ~ 410 6-30021-11-0-*	10	830-1250	750-1295	825-1245
				1770 ~ 410 6-30021-19-0-*	10	1200-1830	1165-1795	1195-1825
				2270 ~1010 6-30021-24-0-*	10	1830-2330	1795-2295	1826-2325
				2670 ~1010 6-30021-28-0-*	10	2080-2730	2045-2695	2075-2725
1	2	2	4	**Connecting bar Ø 8**				
				Length Article No.		SW	SW	SW
				1100 9-25476-11-0-1	10	700-1600	700-1600	700-1600
				1350 9-25476-14-0-1	10	1601-1850	1601-1850	1601-1850
				1850 9-25476-18-0-1	10	1851-2350	1851-2350	1851-2350
				3300 9-25476-33-0-1	10	2351-3300	2351-3300	2351-3300

[1] * = Colour: 1 = EV 1, 2 = EV 2, 5 = UC 5, 7 = white (RAL 9016)
[2] = Up to 200 kg sash weight with tension spring 9-40235-05-0-0 [3] = Exact handle position depending on profile dimension

Lift-slide fittings G.U-934 according to profile system

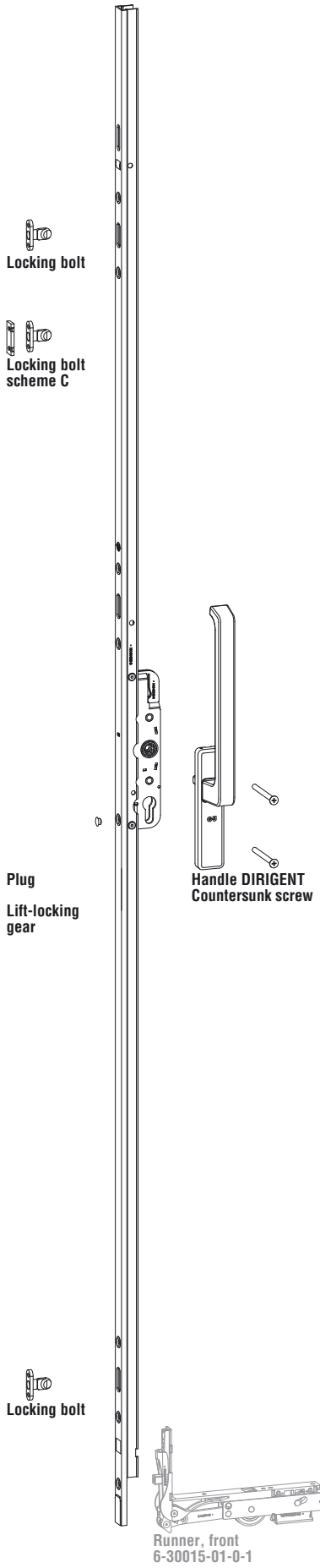

Fitting requirements according to size of sashes for schemes A to F

Quantity A	C	D	F	Description	PU	Gartner	Metra NC 150 STH	Pontio/ Gastello
1	2	2	4	**Basic box – G.U-934**	1		K-16965-00-0-0	K-16967-00-0-0
1	2	2	4	**Box of runners – G.U-934/954**	1	K-16488-00-0-1		
1	2	2	4	**Additional box G.U-934**	1	K-17468-00-0-0		
1	2	2	4	**Handle DIRIGENT** [1]	1	6-24607-00-0-*	6-24608-00-0-*	6-24607-00-0-*
1	2	2	4	**Flush pull** [1]	1	9-29992-01-0-*	9-29992-01-0-*	9-29992-01-0-*
2	4	4	8	Countersunk screw M 6	100		9-13274-70-0-1	
1	2	4	4	Guide	1		K-14281-00-0-6	
2	4	2	4	Sealing plate	1		6-22154-05-0-0	
	2		2	Locking bolt	1	6-22648-05-0-1		9-38825-00-0-1
	1		1	Bag of locking bolt	1		K-14280-00-0-3	
				Optional parts				
2	4	2	4	Bag of stop 90 [1]	1	K-17134-00-0-*	K-17134-00-0-*	K-17134-00-0-*
1	1	2	2	Bag of bottom keeper	1	K-12057-00-0-1	K-12057-00-0-1	K-12057-00-0-1
1	2	2	4	**Lift-locking gear G.U-934** [1] [2]				
				Length G [3] / Article No.		SH	SH	SH
				1190 ~ 410 / 6-30021-11-0-*	10	750-1295	830-1250	750-1295
				1770 ~ 410 / 6-30021-19-0-*	10	1165-1795	1200-1830	1165-1795
				2270 ~1010 / 6-30021-24-0-*	10	1795-2295	1830-2330	1795-2295
				2670 ~1010 / 6-30021-28-0-*	10	2045-2695	2080-2730	2045-2695
1	2	2	4	**Connecting bar Ø 8**				
				Length / Article No.		SW	SW	SW
				1100 / 9-25476-11-0-1	10	700-1600	700-1600	700-1600
				1350 / 9-25476-14-0-1	10	1601-1850	1601-1850	1601-1850
				1850 / 9-25476-18-0-1	10	1851-2350	1851-2350	1851-2350
				3300 / 9-25476-33-0-1	10	2351-3300	2351-3300	2351-3300

[1] * = Colour: 1 = EV 1, 2 = EV 2, 5 = UC 5, 7 = white (RAL 9016)
[2] = Up to 200 kg sash weight with tension spring 9-40235-05-0-0 [3] = Exact handle position depending on profile dimension

Fitting requirements according to size of sashes for schemes A to F

Quantity A	C	D	F	Description	PU	Profilati	SAPA-RC Serie 125	SAPA-ES 60
1	2	2	4	**Basic box – G.U-934**	1	K-16967-00-0-0		
1	2	2	4	**Box of runners – G.U-934/954**	1		K-16488-00-0-1	K-16488-00-0-1
1	2	2	4	**Additional box G.U-934**	1		K-17266-00-0-1	K-17469-00-0-0
1	2	2	4	**Handle DIRIGENT** [1]	1	6-24608-00-0-*	6-24607-00-0-*	6-24607-00-0-*
1	2	2	4	**Flush pull** [1]	1	9-29992-01-0-*		9-29992-01-0-*
2	4	4	8	Countersunk screw M 6	100			9-24775-00-0-0
	2		2	Locking bolt	1	6-22648-05-0-1		
	2		2	Fixing platte	1	9-24414-00-0-0		
	4		4	Countersunk screw M 5 x 20	1	9-13133-20-0-0		
				Optional parts				
2	4	2	4	Bag of stop 90 [1]	1	K-17134-00-0-*	K-17134-00-0-*	K-17134-00-0-*
1	1	2	2	Bag of bottom keeper	1		K-12057-00-0-1	
1	2	2	4	**Lift-locking gear G.U-934** [1] [2]				
				Length G [3] / Article No.		SH	SH	SH
				1190 ~ 410 / 6-30021-11-0-*	10	830-1250	774-1239	750-1295
				1770 ~ 410 / 6-30021-19-0-*	10	1200-1830	1144-1819	1165-1795
				2270 ~1010 / 6-30021-24-0-*	10	1830-2330	1774-2319	1795-2295
				2670 ~1010 / 6-30021-28-0-*	10	2080-2730	2024-2719	2045-2695
1	2	2	4	**Connecting bar Ø 8**				
				Length / Article No.		SW	SW	SW
				1100 / 9-25476-11-0-1	10	700-1600	700-1600	700-1600
				1350 / 9-25476-14-0-1	10	1601-1850	1601-1850	1601-1850
				1850 / 9-25476-18-0-1	10	1851-2350	1851-2350	1851-2350
				3300 / 9-25476-33-0-1	10	2351-3300	2351-3300	2351-3300

[1] * = Colour: 1 = EV 1, 2 = EV 2, 5 = UC 5, 7 = white (RAL 9016)
[2] = Up to 200 kg sash weight with tension spring 9-40235-05-0-0 [3] = Exact handle position depending on profile dimension

Lift-slide fittings G.U-934 according to profile system

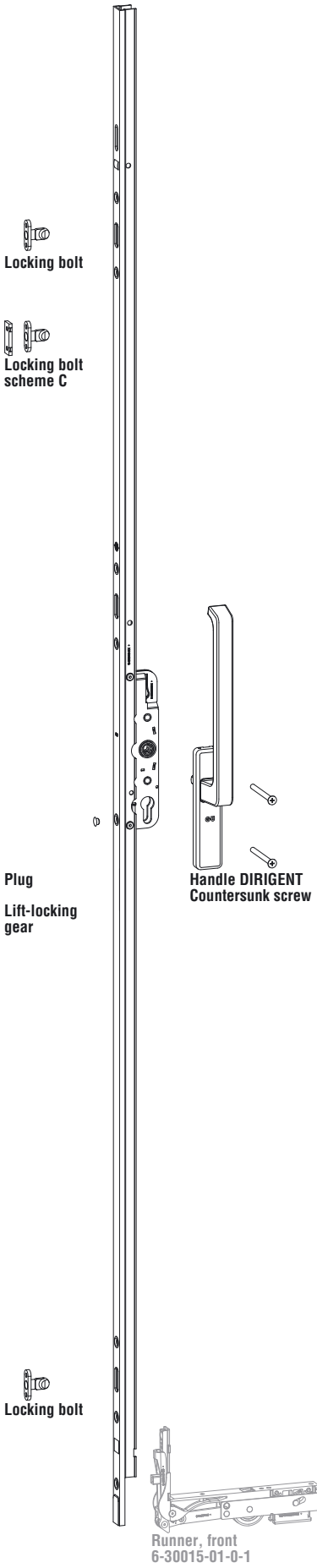

Fitting requirements according to size of sashes for schemes A to F

Quantity A	C	D	F	Description	PU	Sykon	Technal GT / GT1	Thyssen-Schulte TSB W 70
1	2	2	4	**Box of runners – G.U-934/954**	1	K-16488-00-0-1	K-16488-00-0-1	K-16488-00-0-1
1	2	2	4	**Additional box G.U-934**	1	K-17470-00-0-0	K-17471-00-0-0	K-17472-00-0-0
1	2	2	4	**Handle DIRIGENT** [1]	1	6-24607-00-0-*	6-24607-00-0-*	6-24607-00-0-*
1	2	2	4	**Flush pull** [1]	1	9-29992-01-0-*	9-29992-01-0-*	9-29992-01-0-*
2	4	4	8	Countersunk screw M 6	100	9-13274-60-0-1		
				Optional parts				
2	4	2	4	Bag of stop 90 [1]	1	K-17134-00-0-*	K-17134-00-0-*	K-17134-00-0-*
1	2	2	4	**Lift-locking gear G.U-934** [1] [2]				
				Length G [3] / Article No.		SH	SH	SH
				1190 ~ 410 / 6-30021-11-0-*	10	750-1295	750-1295	750-1295
				1770 ~ 410 / 6-30021-19-0-*	10	1165-1795	1165-1795	1165-1795
				2270 ~1010 / 6-30021-24-0-*	10	1795-2295	1795-2295	1795-2295
				2670 ~1010 / 6-30021-28-0-*	10	2045-2695	2045-2695	2045-2695
1	2	2	4	**Connecting bar Ø 8**				
				Length / Article No.		SW	SW	SW
				1100 / 9-25476-11-0-1	10	700-1600	700-1600	700-1600
				1350 / 9-25476-14-0-1	10	1601-1850	1601-1850	1601-1850
				1850 / 9-25476-18-0-1	10	1851-2350	1851-2350	1851-2350
				3300 / 9-25476-33-0-1	10	2351-3300	2351-3300	2351-3300

[1] * = Colour: 1 = EV 1, 2 = EV 2, 5 = UC 5, 7 = white (RAL 9016)
[2] = Up to 200 kg sash weight with tension spring 9-40235-05-0-0 [3] = Exact handle position depending on profile dimension

Fitting requirements according to size of sashes for schemes A to F

Quantity A	C	D	F	Description	PU	VAW Profitherm
1	2	2	4	**Box of runners – G.U-934/954**	1	K-16488-00-0-1
1	2	2	4	**Additional box G.U-934**	1	K-17473-00-0-0
1	2	2	4	**Handle DIRIGENT** [1]	1	6-24607-00-0-*
1	2	2	4	**Flush pull** [1]	1	9-29992-01-0-*
				Optional parts		
2	4	2	4	Bag of stop 90 [1]	1	K-17134-00-0-*
1	1	2	2	Bag of bottom keeper	1	K-12057-00-0-1
1	2	2	4	**Lift-locking gear G.U-934** [1] [2]		
				Length G [3] / Article No.		SH
				1190 ~ 410 / 6-30021-11-0-*	10	750-1295
				1770 ~ 410 / 6-30021-19-0-*	10	1165-1795
				2270 ~1010 / 6-30021-24-0-*	10	1795-2295
				2670 ~1010 / 6-30021-28-0-*	10	2045-2695
1	2	2	4	**Connecting bar Ø 8**		
				Length / Article No.		SW
				1100 / 9-25476-11-0-1	10	700-1600
				1350 / 9-25476-14-0-1	10	1601-1850
				1850 / 9-25476-18-0-1	10	1851-2350
				3300 / 9-25476-33-0-1	10	2351-3300

[1] * = Colour: 1 = EV 1, 2 = EV 2, 5 = UC 5, 7 = white (RAL 9016)
[2] = Up to 200 kg sash weight with tension spring 9-40235-05-0-0 [3] = Exact handle position depending on profile dimension

Lift-slide fittings G.U-937 according to profile system

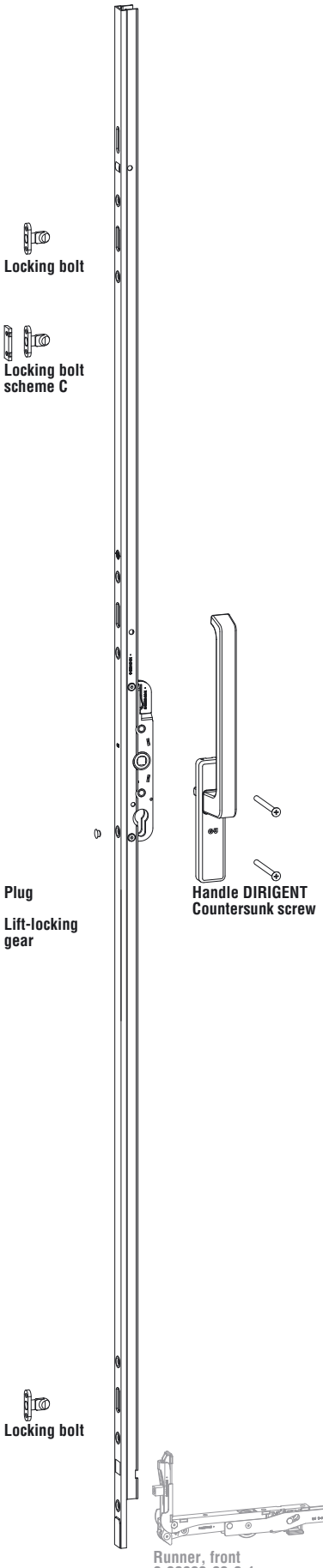

Fitting requirements according to size of sashes for schemes A and D

Quantity A	Quantity D	Description	PU	Alumil Serie S 410	Sykon
1	2	**Box of runners – G.U-937/957**	1	K-16721-00-0-1	K-16721-00-0-1
1	2	**Additional box G.U-937**	1	K-17474-00-0-0	K-17476-00-0-0
1	2	**Handle DIRIGENT** [1]	1	6-24608-00-0-*	6-24608-00-0-*
1	2	**Flush pull** [1]	1		9-29526-00-0-*
2	4	Countersunk screw M 6	100		9-13183-70-0-0
		Optional parts			
2	2	Bag of stop 90 [1]	1	K-17134-00-0-*	K-17134-00-0-*
1	2	Bag of bottom keeper	1	K-12057-00-0-1	K-12057-00-0-1
1	2	**Lift-locking gear G.U-937** [1]			
		Length G [2] / Article No.		SH	SH
		1190 ~ 410 / 6-30019-11-0-*	10	830-1250	750-1295
		1770 ~ 410 / 6-30019-19-0-*	10	1200-1830	1165-1795
		2270 ~1010 / 6-30019-24-0-*	10	1830-2330	1795-2295
		2670 ~1010 / 6-30019-28-0-*	10	2080-2730	2045-2695
1	2	**Connecting bar Ø 8**			
		Length / Article No.		SW	SW
		1100 / 9-25476-11-0-1	10	700-1600	700-1600
		1350 / 9-25476-14-0-1	10	1601-1850	1601-1850
		1850 / 9-25476-18-0-1	10	1851-2350	1851-2350
		3300 / 9-25476-33-0-1	10	2351-3300	2351-3300

[1] * = Colour: 1 = EV 1, 2 = EV 2, 5 = UC 5, 7 = white (RAL 9016)
[2] = Exact handle position depending on profile dimension

Lift-slide fittings G.U-934, G.U-937

Application	Description	PU	Article No.
Windows and patio doors	**Drilling jigs**		
	Drilling jig for handle	1	9-27272-00-0-0
	Centre punch for locking bolt	1	6-33500-00-0-0

Order catalogue part 5
Horizontal and vertical pivot fittings for aluminium windows

Contents

The present catalogue part contains all horizontal and vertical pivot fittings for aluminium windows and accessories according to the latest state of the art.
The following indications will make you familiar with the concept of the catalogue and help you to handle it easily.

Catalogue structure

The present catalogue part is structured in the following way:
– Optional parts and turn handles, drilling jig
– Sets

Optional parts and turn handles

The option pages show you optional parts and turn handles for all horizontal and vertical pivot fittings at a glance. All supplements of standard versions are clearly arranged.

Sets

Fitting requirements according to sash size and scheme
The illustrations of the fittings are supplemented by corresponding parts tables helping to determine the hardware composition.
Parts supplementing standard versions are clearly presented and can be easily selected.

Order numbers

The order number gives information about
– the article
– its size
– its application - e.g. DIN lh or DIN rh
– its colour/finish

Example
Order number
6-25948-30-0-1

6-25948-			-	-	Article number
-	-30-		-		Size
-	-	-L-			Left hand assembly
-	-	-R-			Right hand assembly
-	-	-0-			Usable on both sides
-	-	-	-	-1	F 1/EV 1, natural (silver colour), fer**GU**ard*silver
-	-	-	-	-2	F 2/EV 2, champagne colour
-	-	-	-	-3	F 3, brass colour (gold colour)
-	-	-	-	-4	UC 3, medium bronze (medium brown)
-	-	-	-	-A	F 4, bronze colour
-	-	-	-	-C	Titanium colour
-	-	-	-	-5	UC 5, dark bronze (dark brown RAL 8022)
-	-	-	-	-6	onyx matt (black RAL 9005)
-	-	-	-	-7	white (RAL 9016)
-	-	-	-	-7T	white (RAL 9010)
-	-	-	-	-8	Stainless steel (stainless steel colour)
-	-	-	-	-*	Surface treatment variable (available colours see price list)

Prices

Single part price list "Total programme"
The prices are listed by ascending article numbers.

Additional sales documentation

Apart from the order catalogue, the following documentation on horizontal and vertical pivot fittings is available:
– Brochures and leaflets informing about product features and advantages
– Presentation boards of all fitting versions
– Working drawings with mounting instructions
– Instructions for maintenance and care

Horizontal and vertical pivot fittings for aluminium windows

Application

Range of application for UNITAS horizontal and vertical pivot fittings:
- Horizontal pivot windows
- Vertical pivot windows
- Fan-lights equipped with fan-light openers

Designs

Horizontal pivot UNITAS 18
Compact screw-on pivot made of non-ferrous metal, for sashes up to 175 kg. Standard version in monobloc construction, exactly adapted to the specifications of various profile systems. Sealing with silicone gaskets.

Vertical pivot UNITAS 88
Compact screw-on pivot made of non-ferrous metal, for sashes up to 175 kg. Standard version in monobloc construction, exactly adapted to the specifications of various profile systems. Sealing with silicone gaskets.

Schwinglager 515
Compact screw-on pivot made of zinc die-casting for sashes up to 130 kg.

Handles

The handles DIRIGENT-T are provided with cockspur for slit ventilation. Handles DIRIGENT-S without cockspur complete the programme.

Locking system 380 E

The fittings are concealed in the rebate and provide for one handle operation. All locking parts are designed for Euro groove 15/20 mm. The locking pins of locking mechanism are adjustable. Clip-on locking plates, fixed or adjustable as an option for optimum gasket pressure.
Corner transmissions are provided with rust-proof 4-leaf stainless steel springs.

Standard colours

Horizontal and vertical pivot fittings are supplied in the following standard colours:

EV 1	Handle DIRIGENT silver colour coated, pivots silver colour coated
UC 5	Handle DIRIGENT dark brown (RAL 8022) coated, pivots dark brown (RAL 8022) coated
White	Handle DIRIGENT white (RAL 9016) coated, pivots white (RAL 9016) coated

Further colours and finishes on request.

Materials, surface sealing fer**GU**ard*silver

The fitting parts are made of high quality steel, zinc die-casting or aluminium alloys.
Depending on the material, they are protected against corrosion by surface sealing with fer**GU**ard*silver or by anodisation (aluminium parts).

Standard surface sealing of horizontal and vertical pivot fittings: fer**GU**ard*silver

All locking components of horizontal and vertical pivot fittings come with the surface sealing fer**GU**ard*silver.

Abbreviations

SRH	Sash rebate height
SRW	Sash rebate width
PU	Packing unit

Profile system manufacturers' information

It is important to observe the product information issued by profile system manufacturers, especially information concerning construction and fabrication, maximum sash dimensions and weights and material features such as linear expansion of profiles.

Application, locking plates

Profile system	Fittings	Frame profile	Sash profile	Reversible profile	Locking plates bottom	top	Begrenzungs-schere	Assembly drawing
Horizontal pivot fittings								
Alu Menziken Alisol 3	UNITAS 18/3	V 73 202	V 76 783	M 39 116	6-27358-00-0-8	G-11071-00-0-1	K-13393-00-0-1	0-43699-1
Alumil M 15000	UNITAS 18/3	M 15008	M 15128	M 15132	6-28832-00-0-1	G-11071-00-0-1	K-13393-00-0-1	0-45486-1
Doral	UNITAS 18/3				6-24666-00-0-1	G-11065-00-0-1	K-13393-00-0-1	0-43061-1
Etem E-40 / E-45	UNITAS 18/3	40101	40230	40530	6-28832-00-0-1	G-11071-00-0-1	K-13393-00-0-1	
Eural Serie 65	UNITAS 18/3				6-27358-00-0-8	G-11071-00-0-1	K-13393-00-0-1	0-43764-1
Fujisash	UNITAS 18/3				6-27358-00-0-8	6-27358-00-0-8	K-13393-00-0-1	0-42927-1
Heroal Serie 110 E	UNITAS 18/3				6-24666-00-0-1	6-30959-01-0-1	K-13393-00-0-1	
Metra NC 50 i	UNITAS 18/3				6-24666-00-0-1	6-30959-01-0-1	K-13393-00-0-1	0-44262-1
Metra NC 50 STH	UNITAS 18/3				6-24666-00-0-1	6-30959-01-0-1	K-13393-00-0-1	0-44285-1
Metra NC 65 STH	UNITAS 18/3				6-24666-00-0-1	6-30959-01-0-1	K-13393-00-0-1	0-44219-1
Metra NC 68 STH	UNITAS 18/3				6-24666-00-0-1	6-30959-01-0-1	K-13393-00-0-1	0-44159-1
MKF Serie TKI 602	UNITAS 18/3	602-01-024	602-03-103		6-24666-00-0-1	9-31758-00-0-1	K-13393-00-0-1	0-43210-1
Ponzio Windstop 65 tt	UNITAS 18/3		365.730	365.650	6-24666-00-0-1	G-11071-00-0-1	K-13393-00-0-1	0-45160-1
Showa-Front	UNITAS 18/3				6-27358-00-0-8	6-27358-00-0-8	K-13393-00-0-1	0-43059-1
Thyssen-Schulte TSB W 70	UNITAS 18/3	W70 14131	W70 57368	Z10 65401	6-24666-00-0-1	G-11800-00-0-1	K-13393-00-0-1	0-43384-1
System neutral drawing	UNITAS 18/3							0-42956-1
Vertical pivot fittings					Frame profile	Reversible profile		
Alumil M 15000	UNITAS 88	M 15008	M 15128	M 15132	G-11071-00-0-1	6-28832-00-0-1	K-13393-00-0-1	0-45488-1
Doral	UNITAS 88				G-11065-00-0-1	6-24666-00-0-1	K-13393-00-0-1	0-43056-1
Etem E-40 / E-45	UNITAS 88	40101	40230	40530	G-11071-00-0-1	6-28832-00-0-1	K-13393-00-0-1	
Fujisash	UNITAS 88				6-27358-00-0-8	6-27358-00-0-8	K-13393-00-0-1	0-42928-1
Heroal Serie 110 E	UNITAS 88				6-30959-01-0-1	6-24666-00-0-1	K-13393-00-0-1	
Metra NC 50 i	UNITAS 88				6-30959-01-0-1	6-24666-00-0-1	K-13393-00-0-1	0-44263-1
Metra NC 50 STH	UNITAS 88				6-30959-01-0-1	6-24666-00-0-1	K-13393-00-0-1	0-44286-1
Metra NC 65 STH	UNITAS 88				6-30959-01-0-1	6-24666-00-0-1	K-13393-00-0-1	0-44218-1
Metra NC 68 STH	UNITAS 88				6-30959-01-0-1	6-24666-00-0-1	K-13393-00-0-1	0-44158-1
MKF Serie TKI 602	UNITAS 88	602-01-024	602-03-103		9-31758-00-0-1	6-24666-00-0-1	K-13393-00-0-1	0-43211-1
Ponzio Windstop 65 tt	UNITAS 88		365.730	365.650	G-11071-00-0-1	6-24666-00-0-1	K-13393-00-0-1	0-45159-1
Showa Front	UNITAS 88				6-27358-00-0-8	6-27358-00-0-8	K-13393-00-0-1	0-43058-1
Thyssen-Schulte TSB W 70	UNITAS 88	W70 14131	W70 57368	Z10 65401	G-11800-00-0-1	6-24666-00-0-1	K-13393-00-0-1	0-43385-1
System neutral drawing	UNITAS 88							0-42959-1

Arrangement of horizontal pivot fittings

Locking system G.U-FERCO 380 E

Arrangement of vertical pivot fittings

Locking system G.U-FERCO 380 E

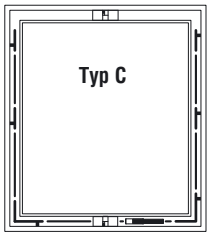

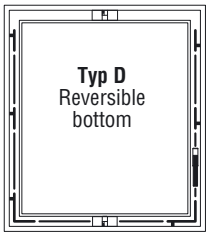

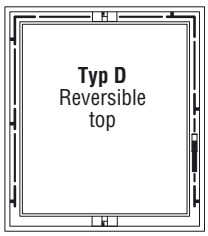

Assembly dimensions – frame and sash profile

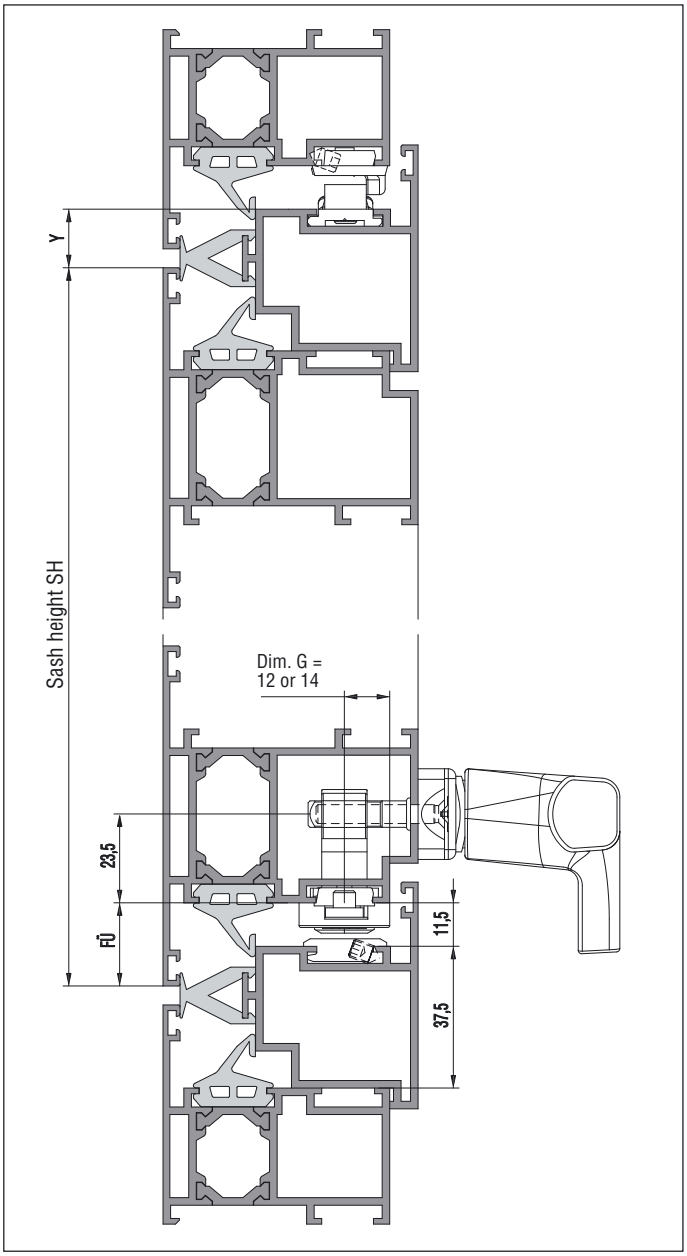

Horizontal pivot fittings UNITAS 18/3

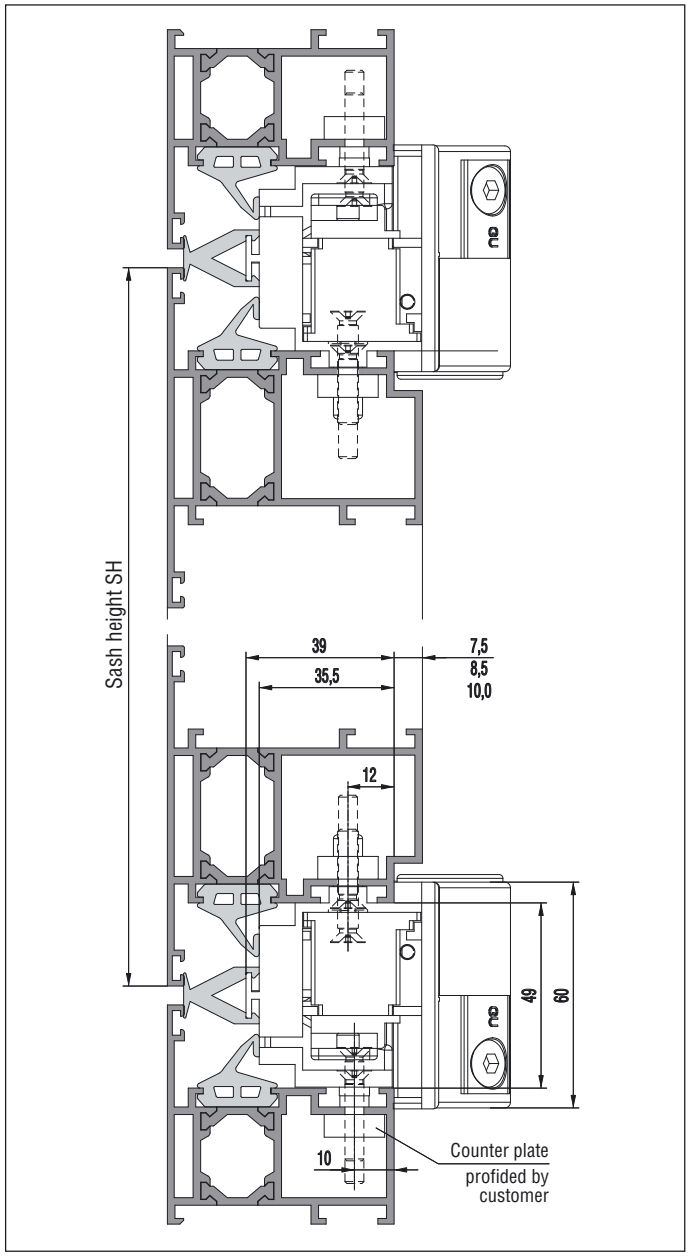

Vertical pivot fittings UNITAS 88

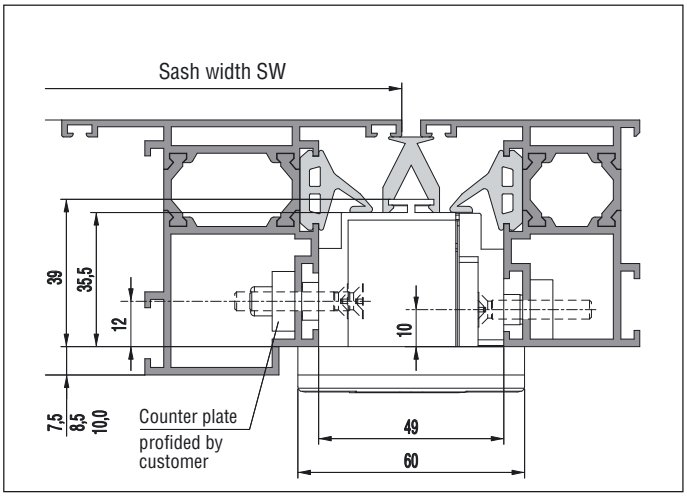

Horizontal pivot fittings UNITAS 18/3

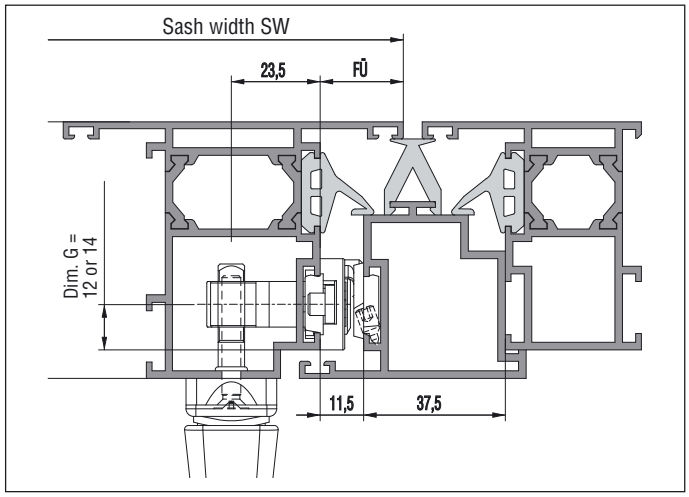

Vertical pivot fittings UNITAS 88

Assembly dimensions – frame, sash and reversible profile

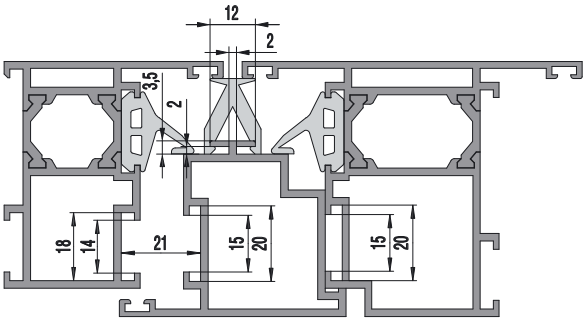

Frame groove 14/18

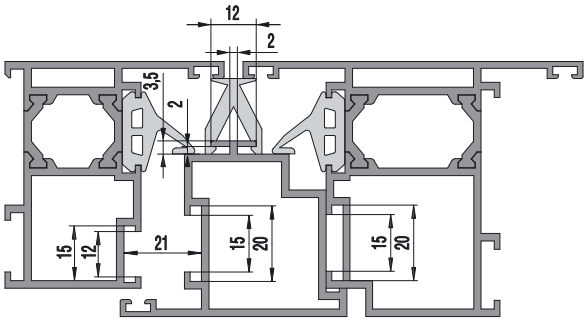

Frame groove 12/15

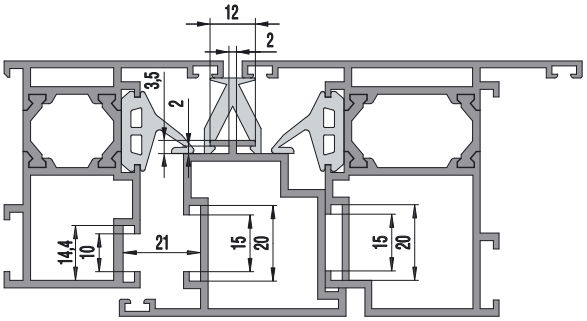

Frame groove 10/14

Drilling and milling dimensions

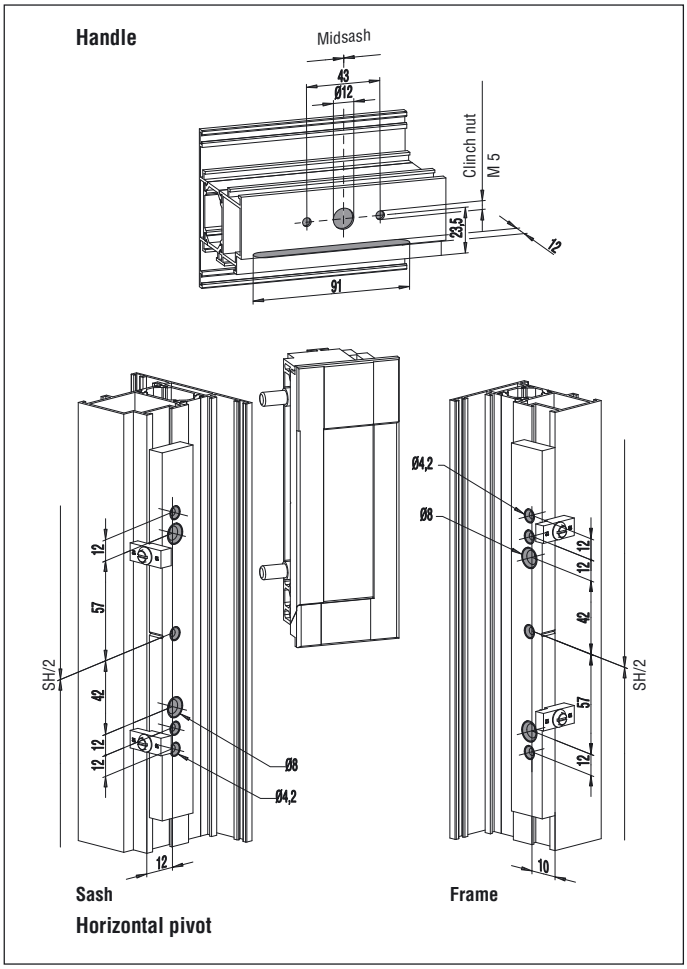

Drill pattern for handle and pivot – horizontal pivot fittings UNITAS 88

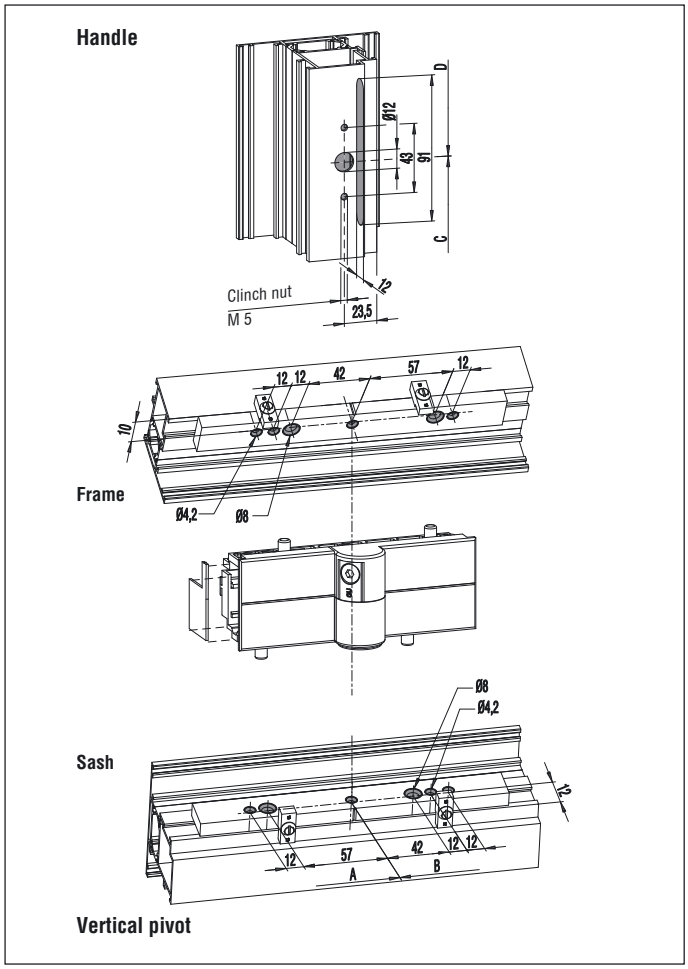

Drill pattern for handle and pivot – vertical pivot fittings UNITAS 88

Push rod cutting lengths with 22 mm sash overlap – horizontal pivot fittings UNITAS 18/3

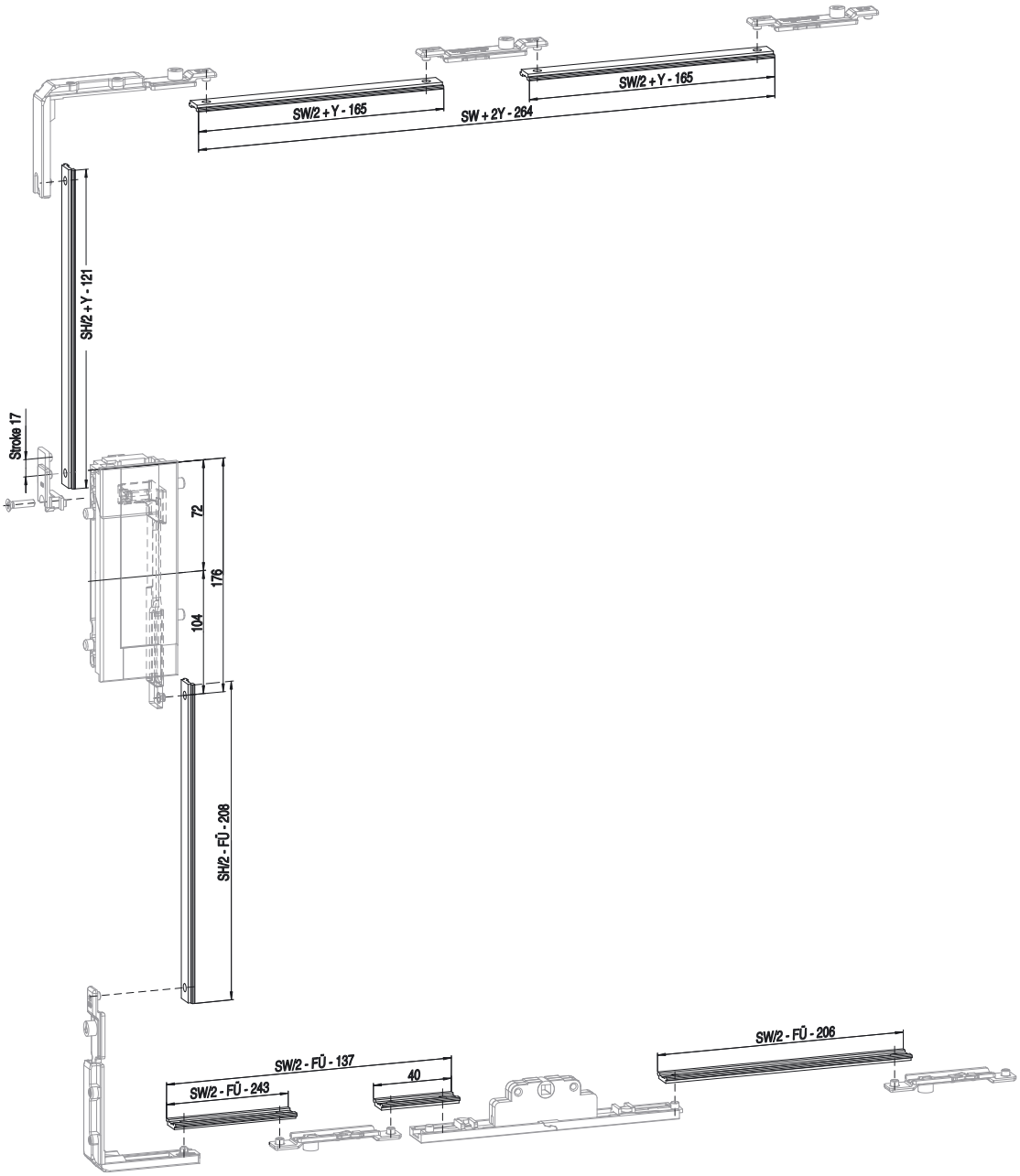

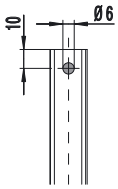

Push rod drill holes

Push rod cutting lengths with 22 mm sash overlap – vertical pivot fittings UNITAS 88

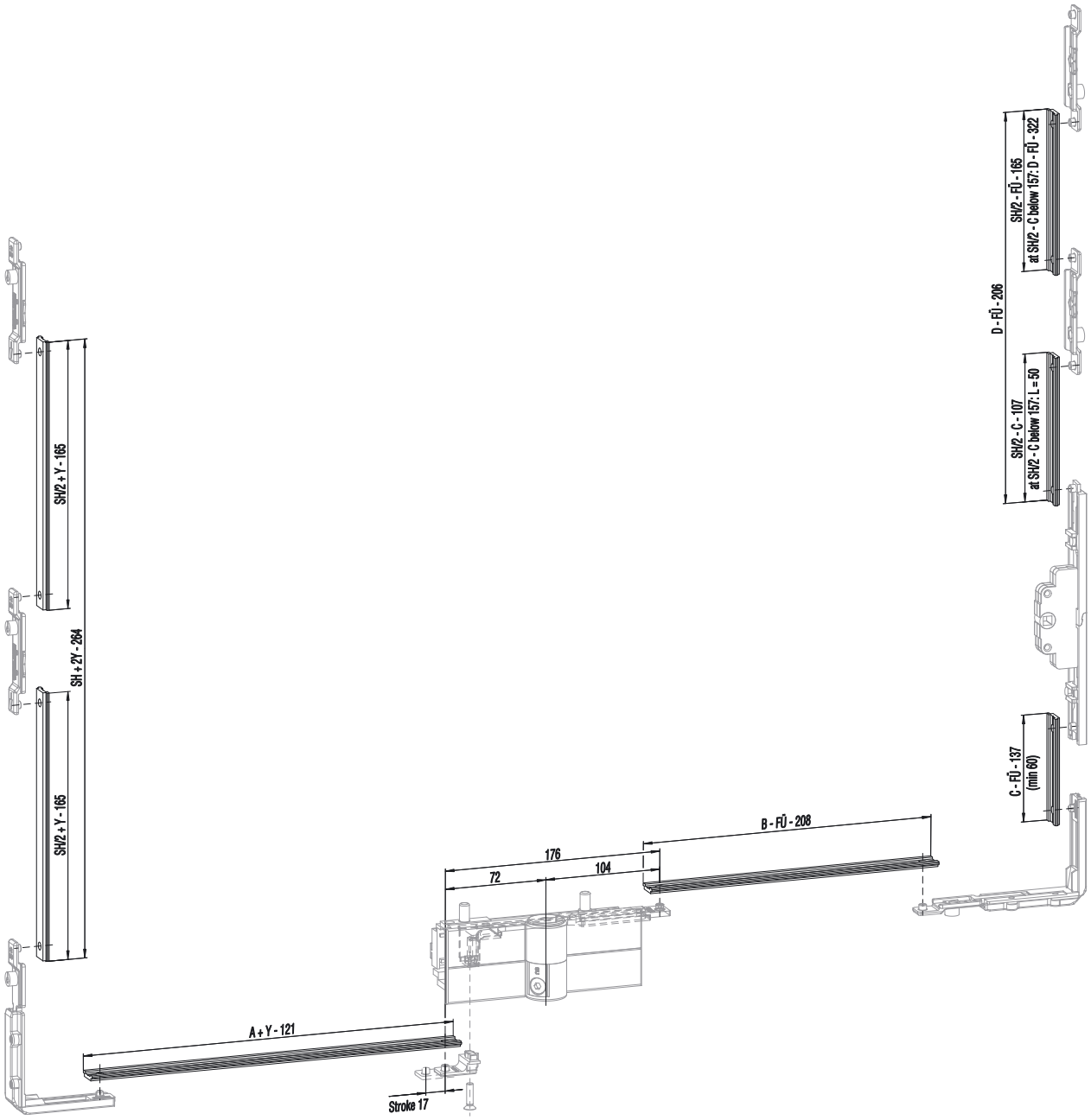

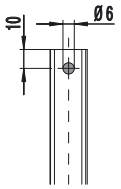

Push rod drill holes

Horizontal and vertical pivot fittings for aluminium windows

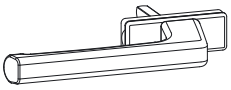

Handle DIRIGENT-S 44
without lugs
Spindle 30 6-29189-30-0-*
Rosette 24 x 67 mm

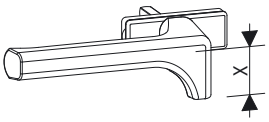

Handle DIRIGENT-T 46
without lugs, dim. "X" = 42 mm
Spindle 30 6-29187-30-0-*
Rosette 24 x 67 mm

Handle DIRIGENT-T 49
without lugs, dim. "X" = 37 mm
Spindle 30 6-29188-30-0-*
Rosette 24 x 67 mm

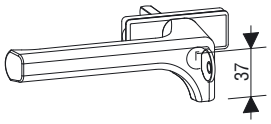

Handle DIRIGENT-F/Z
lockable,
for aluminium windows on request

Automatic 180° locking latch
9-20017-00-0-*

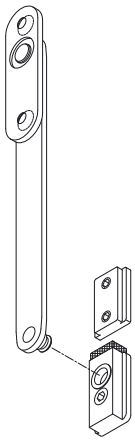

Bag of limiting stay
K-13393-00-0-1

Assembly drawing 0-42973

Optional part for limiting stay

Illustration	Description	PU	Article No.
	**Adapter ring Ø 6 mm** for clip pin to push rod hole Ø 8 mm	1	9-45167-00-0-6

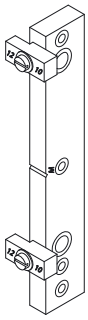

Drilling jig for
horizontal pivot UNITAS 18/3 and
vertical pivot UNITAS 88
6-27419-00-0-0

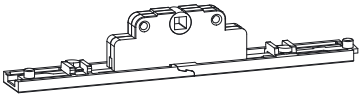

Mill-in gear 90°

Mill-in gear 90° with thread M 5
for handle mounting with countersunk screws M 5

Application Sash groove	Description	Backset mm	PU	Article No.
Euro groove 15/20	**Mill-in gear 90°**	25	1	6-25948-25-0-1
		30	1	6-25948-30-0-1
		37	1	6-25948-37-0-1
		42	1	6-25948-42-0-1
		45	1	6-25948-45-0-1
		50	1	6-25948-50-0-1

Mill-in gear 90° with drill-hole Ø 4,8
for handle mounting with countersunk sheet metal screws 4,8

Application Sash groove	Description	Backset mm	PU	Article No.
Euro groove 15/20	**Mill-in gear 90°**	30	1	6-25948-33-0-1
Sash groove 16/20	**Mill-in gear 90°**	35	1	6-25948-35-0-1
		40	1	6-25948-40-0-1

Profile systems Alu Menziken Alisol 3, Alumil M 15000, Doral, Etem E-40 / E-45, Eural Serie 65, Fujisash

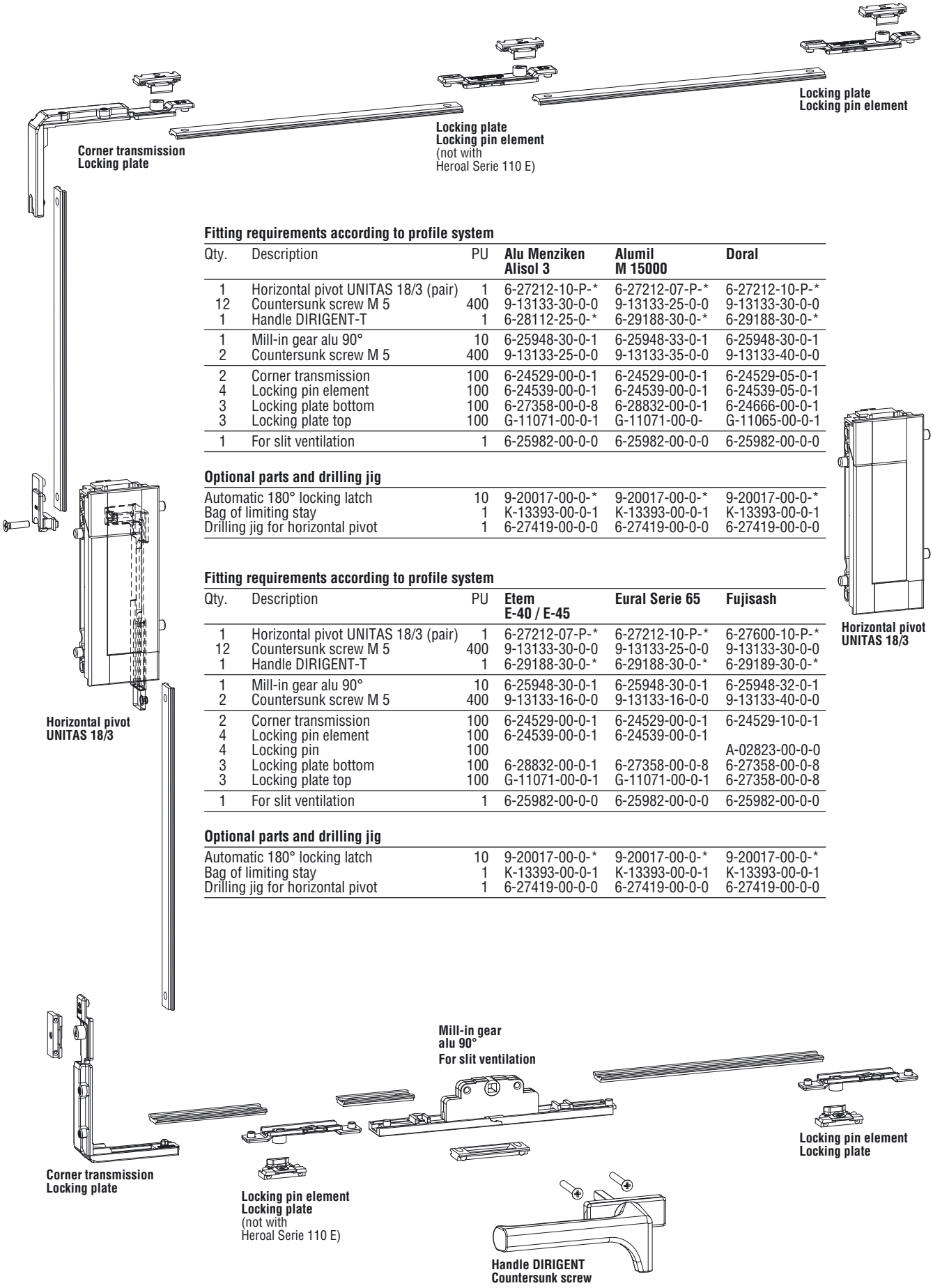

Fitting requirements according to profile system

Qty.	Description	PU	Alu Menziken Alisol 3	Alumil M 15000	Doral
1	Horizontal pivot UNITAS 18/3 (pair)	1	6-27212-10-P-*	6-27212-07-P-*	6-27212-10-P-*
12	Countersunk screw M 5	400	9-13133-30-0-0	9-13133-25-0-0	9-13133-30-0-0
1	Handle DIRIGENT-T	1	6-28112-25-0-*	6-29188-30-0-*	6-29188-30-0-*
1	Mill-in gear alu 90°	10	6-25948-30-0-1	6-25948-33-0-1	6-25948-30-0-1
2	Countersunk screw M 5	400	9-13133-25-0-0	9-13133-35-0-0	9-13133-40-0-0
2	Corner transmission	100	6-24529-00-0-1	6-24529-00-0-1	6-24529-05-0-1
4	Locking pin element	100	6-24539-00-0-1	6-24539-00-0-1	6-24539-05-0-1
3	Locking plate bottom	100	6-27358-00-0-8	6-28832-00-0-1	6-24666-00-0-1
3	Locking plate top	100	G-11071-00-0-1	G-11071-00-0-	G-11065-00-0-1
1	For slit ventilation	1	6-25982-00-0-0	6-25982-00-0-0	6-25982-00-0-0

Optional parts and drilling jig

Automatic 180° locking latch		10	9-20017-00-0-*	9-20017-00-0-*	9-20017-00-0-*
Bag of limiting stay		1	K-13393-00-0-1	K-13393-00-0-1	K-13393-00-0-1
Drilling jig for horizontal pivot		1	6-27419-00-0-0	6-27419-00-0-0	6-27419-00-0-0

Fitting requirements according to profile system

Qty.	Description	PU	Etem E-40 / E-45	Eural Serie 65	Fujisash
1	Horizontal pivot UNITAS 18/3 (pair)	1	6-27212-07-P-*	6-27212-10-P-*	6-27600-10-P-*
12	Countersunk screw M 5	400	9-13133-30-0-0	9-13133-25-0-0	9-13133-30-0-0
1	Handle DIRIGENT-T	1	6-29188-30-0-*	6-29188-30-0-*	6-29189-30-0-*
1	Mill-in gear alu 90°	10	6-25948-30-0-1	6-25948-30-0-1	6-25948-32-0-1
2	Countersunk screw M 5	400	9-13133-16-0-0	9-13133-16-0-0	9-13133-40-0-0
2	Corner transmission	100	6-24529-00-0-1	6-24529-00-0-1	6-24529-10-0-1
4	Locking pin element	100	6-24539-00-0-1	6-24539-00-0-1	
4	Locking pin	100			A-02823-00-0-0
3	Locking plate bottom	100	6-28832-00-0-1	6-27358-00-0-8	6-27358-00-0-8
3	Locking plate top	100	G-11071-00-0-1	G-11071-00-0-1	6-27358-00-0-8
1	For slit ventilation	1	6-25982-00-0-0	6-25982-00-0-0	6-25982-00-0-0

Optional parts and drilling jig

Automatic 180° locking latch		10	9-20017-00-0-*	9-20017-00-0-*	9-20017-00-0-*
Bag of limiting stay		1	K-13393-00-0-1	K-13393-00-0-1	K-13393-00-0-1
Drilling jig for horizontal pivot		1	6-27419-00-0-0	6-27419-00-0-0	6-27419-00-0-0

Profile systems Heroal Serie 110 E, Metra NC 50 i, Metra NC 50 STH, Metra NC 65 STH, Metra NC 68 STH, MKF Serie TKI 602

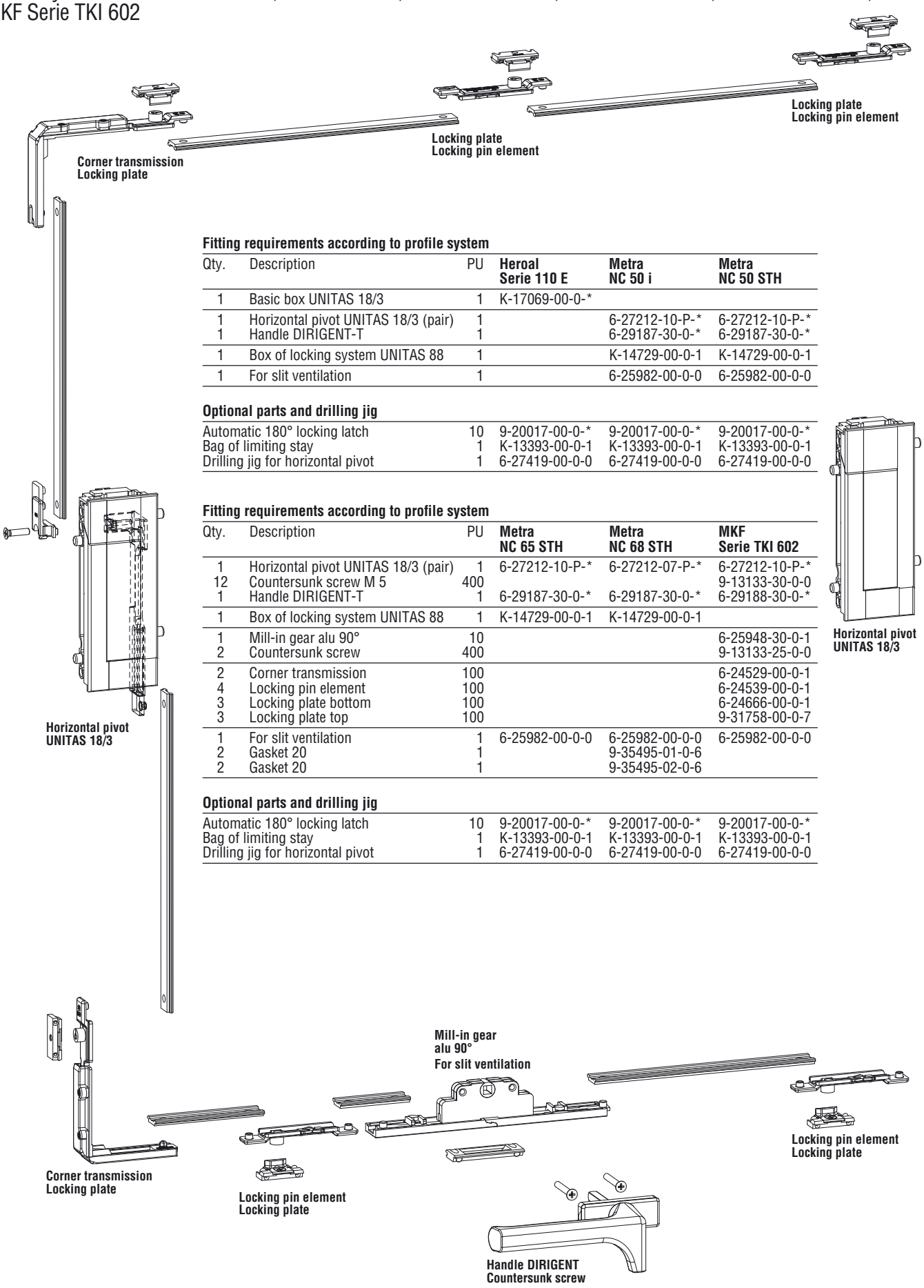

Fitting requirements according to profile system

Qty.	Description	PU	Heroal Serie 110 E	Metra NC 50 i	Metra NC 50 STH
1	Basic box UNITAS 18/3	1	K-17069-00-0-*		
1	Horizontal pivot UNITAS 18/3 (pair)	1		6-27212-10-P-*	6-27212-10-P-*
1	Handle DIRIGENT-T	1		6-29187-30-0-*	6-29187-30-0-*
1	Box of locking system UNITAS 88	1		K-14729-00-0-1	K-14729-00-0-1
1	For slit ventilation	1		6-25982-00-0-0	6-25982-00-0-0

Optional parts and drilling jig

Automatic 180° locking latch	10	9-20017-00-0-*	9-20017-00-0-*	9-20017-00-0-*
Bag of limiting stay	1	K-13393-00-0-1	K-13393-00-0-1	K-13393-00-0-1
Drilling jig for horizontal pivot	1	6-27419-00-0-0	6-27419-00-0-0	6-27419-00-0-0

Fitting requirements according to profile system

Qty.	Description	PU	Metra NC 65 STH	Metra NC 68 STH	MKF Serie TKI 602
1	Horizontal pivot UNITAS 18/3 (pair)	1	6-27212-10-P-*	6-27212-07-P-*	6-27212-10-P-*
12	Countersunk screw M 5	400			9-13133-30-0-0
1	Handle DIRIGENT-T	1	6-29187-30-0-*	6-29187-30-0-*	6-29188-30-0-*
1	Box of locking system UNITAS 88	1	K-14729-00-0-1	K-14729-00-0-1	
1	Mill-in gear alu 90°	10			6-25948-30-0-1
2	Countersunk screw	400			9-13133-25-0-0
2	Corner transmission	100			6-24529-00-0-1
4	Locking pin element	100			6-24539-00-0-1
3	Locking plate bottom	100			6-24666-00-0-1
3	Locking plate top	100			9-31758-00-0-7
1	For slit ventilation	1	6-25982-00-0-0	6-25982-00-0-0	6-25982-00-0-0
2	Gasket 20	1		9-35495-01-0-6	
2	Gasket 20	1		9-35495-02-0-6	

Optional parts and drilling jig

Automatic 180° locking latch	10	9-20017-00-0-*	9-20017-00-0-*	9-20017-00-0-*
Bag of limiting stay	1	K-13393-00-0-1	K-13393-00-0-1	K-13393-00-0-1
Drilling jig for horizontal pivot	1	6-27419-00-0-0	6-27419-00-0-0	6-27419-00-0-0

Profile systems Ponzio Windstop 65 tt, Showa Front, Thyssen-Schulte TSB W 70

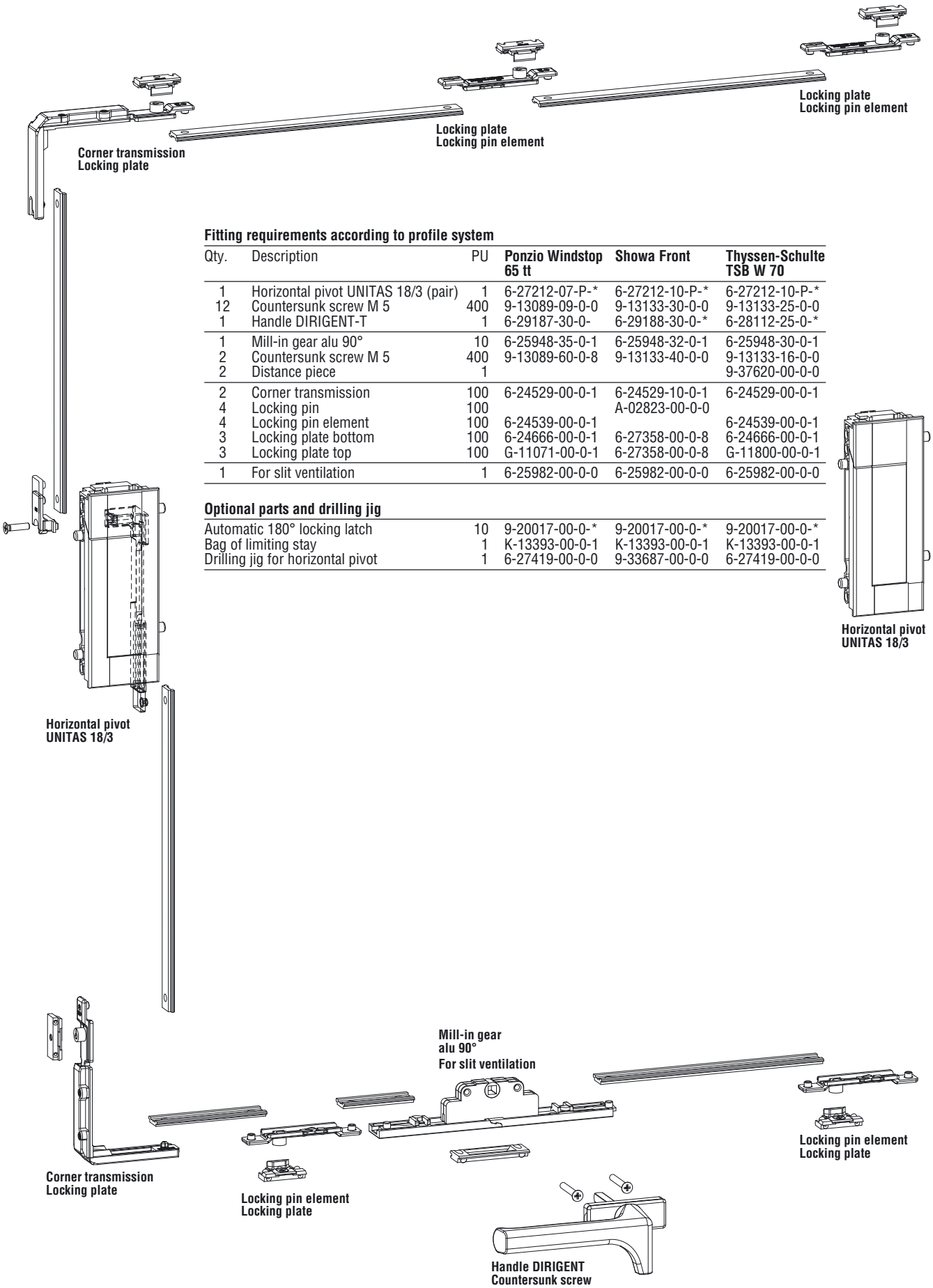

Fitting requirements according to profile system

Qty.	Description	PU	Ponzio Windstop 65 tt	Showa Front	Thyssen-Schulte TSB W 70
1	Horizontal pivot UNITAS 18/3 (pair)	1	6-27212-07-P-*	6-27212-10-P-*	6-27212-10-P-*
12	Countersunk screw M 5	400	9-13089-09-0-0	9-13133-30-0-0	9-13133-25-0-0
1	Handle DIRIGENT-T	1	6-29187-30-0-	6-29188-30-0-*	6-28112-25-0-*
1	Mill-in gear alu 90°	10	6-25948-35-0-1	6-25948-32-0-1	6-25948-30-0-1
2	Countersunk screw M 5	400	9-13089-60-0-8	9-13133-40-0-0	9-13133-16-0-0
2	Distance piece	1			9-37620-00-0-0
2	Corner transmission	100	6-24529-00-0-1	6-24529-10-0-1	6-24529-00-0-1
4	Locking pin	100		A-02823-00-0-0	
4	Locking pin element	100	6-24539-00-0-1		6-24539-00-0-1
3	Locking plate bottom	100	6-24666-00-0-1	6-27358-00-0-8	6-24666-00-0-1
3	Locking plate top	100	G-11071-00-0-1	6-27358-00-0-8	G-11800-00-0-1
1	For slit ventilation	1	6-25982-00-0-0	6-25982-00-0-0	6-25982-00-0-0

Optional parts and drilling jig

Automatic 180° locking latch	10	9-20017-00-0-*	9-20017-00-0-*	9-20017-00-0-*
Bag of limiting stay	1	K-13393-00-0-1	K-13393-00-0-1	K-13393-00-0-1
Drilling jig for horizontal pivot	1	6-27419-00-0-0	9-33687-00-0-0	6-27419-00-0-0

Profile systems with Euro groove 15/20 mm on the sash – 6 lockings

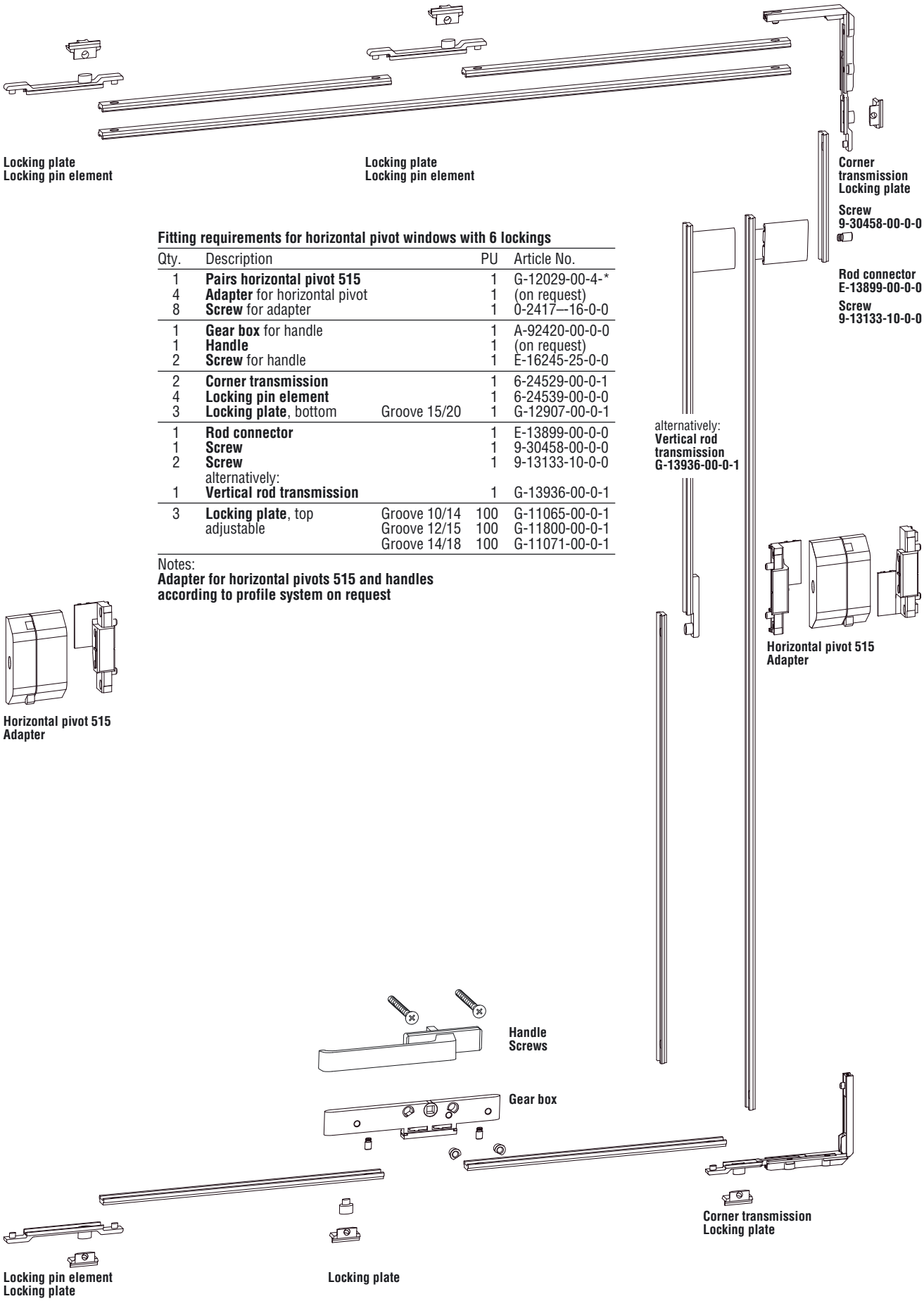

Fitting requirements for horizontal pivot windows with 6 lockings

Qty.	Description		PU	Article No.
1	**Pairs horizontal pivot 515**		1	G-12029-00-4-*
4	**Adapter** for horizontal pivot		1	(on request)
8	**Screw** for adapter		1	0-2417—-16-0-0
1	**Gear box** for handle		1	A-92420-00-0-0
1	**Handle**		1	(on request)
2	**Screw** for handle		1	E-16245-25-0-0
2	**Corner transmission**		1	6-24529-00-0-1
4	**Locking pin element**		1	6-24539-00-0-0
3	**Locking plate**, bottom	Groove 15/20	1	G-12907-00-0-1
1	**Rod connector**		1	E-13899-00-0-0
1	**Screw**		1	9-30458-00-0-0
2	**Screw**		1	9-13133-10-0-0
	alternatively:			
1	**Vertical rod transmission**		1	G-13936-00-0-1
3	**Locking plate**, top adjustable	Groove 10/14	100	G-11065-00-0-1
		Groove 12/15	100	G-11800-00-0-1
		Groove 14/18	100	G-11071-00-0-1

Notes:
Adapter for horizontal pivots 515 and handles according to profile system on request

Profile systems Alumil M 15000, Doral, Etem E-40 / E-45, Fujisash, Heroal Serie 110 E, Metra NC 50 i

Locking plate
Locking pin element

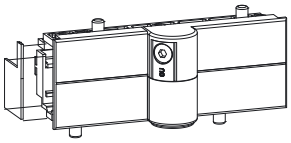

Vertical pivot
UNITAS 88

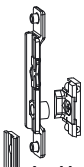

Locking pin
element
Locking plate

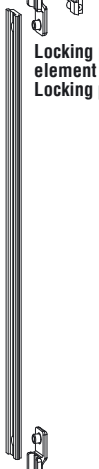

Fitting requirements according to profile system

Qty.	Description	PU	Alumil M 15000	Doral	Etem E-40 / E-45
1	Vertical pivot UNITAS 88 (pair)	1	6-27337-07-P-*	6-27337-10-P-*	6-27337-07-P-*
14	Countersunk screw M 5	400	9-13133-25-0-0	9-13133-30-0-0	9-13133-30-0-0
1	Bag of coupling bar G 12	20	K-14426-01-*-*	K-14426-01-*-*	K-14426-01-*-*
1	Handle DIRIGENT-S 44	1	6-29189-30-0-*	6-29189-30-0-*	6-29189-30-0-*
1	Mill-in gear alu 90°	10	6-25948-33-0-1	6-25948-30-0-1	6-25948-30-0-1
2	Countersunk screw M 5	400	9-13133-35-0-0	9-13133-40-0-0	9-13133-40-0-0
2	Corner transmission	100	6-24529-00-0-1	6-24529-05-0-1	6-24529-00-0-1
4	Locking pin element	100	6-24539-00-0-1	6-24539-05-0-1	6-24539-00-0-1
3	Locking plate frame	100	G-11071-00-0-1	G-11065-00-0-1	G-11071-00-0-1
3	Locking plate reversible profile	100	6-28832-00-0-1	6-24666-00-0-1	6-28832-00-0-1

Optional parts and drilling jig

Automatic 180° locking latch	10	9-20017-00-0-*	9-20017-00-0-*	9-20017-00-0-*
Bag of limiting stay	1	K-13393-00-0-1	K-13393-00-0-1	K-13393-00-0-1
Drilling jig for vertical pivot	1	6-27419-00-0-0	6-27419-00-0-0	6-27419-00-0-0

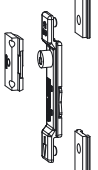

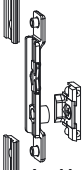

Locking pin
element
Locking plate

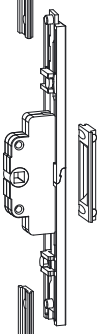

Mill-in gear
alu 90°
For slit ventilation

Fitting requirements according to profile system

Qty.	Description	PU	Fujisash	Heroal Serie 110 E	Metra NC 50 i
1	Basic box UNITAS 88	1		K-17313-00-0-*	
1	Vertical pivot UNITAS 88 (pair)	1	6-27337-10-P-*		6-27337-10-P-*
14	Countersunk screw M 5	400	9-13133-30-0-0		
1	Bag of coupling bar G 12	20	K-14426-02-*-*		K-14426-01-*-*
1	Handle DIRIGENT-T	1	6-29189-30-0-*		6-29187-30-0-*
1	Box of locking system UNITAS 88	1			K-14729-00-0-1
1	Mill-in gear alu 90°	10	6-25948-32-0-1		
2	Countersunk screw M 5	400	9-13133-40-0-0		
2	Corner transmission	100	6-24529-10-0-1		
4	Locking pin	100	A-02823-00-0-0		
3	Locking plate frame	100	6-27358-00-0-8		
3	Locking plate reversible profile	100	6-27358-00-0-8		
1	For slit ventilation	1			6-25982-00-0-0

Optional parts and drilling jig

Automatic 180° locking latch	10	9-20017-00-0-*	9-20017-00-0-*	9-20017-00-0-*
Bag of limiting stay	1	K-13393-00-0-1	K-13393-00-0-1	K-13393-00-0-1
Drilling jig for vertical pivot	1	6-27419-00-0-0	6-27419-00-0-0	6-27419-00-0-0

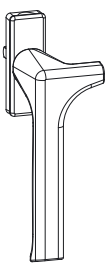

Handle DIRIGENT
Countersunk screw

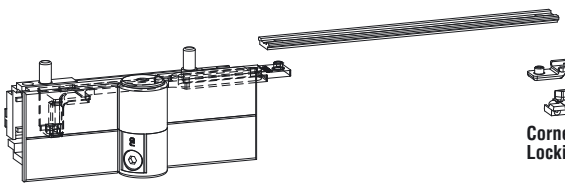

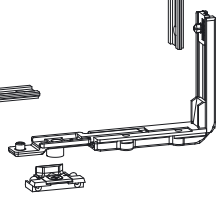

Corner transmission
Locking plate

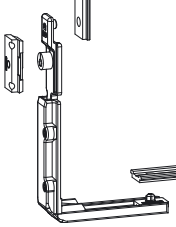

Corner transmission
Locking plate

Vertical pivot
UNITAS 88

Profile systems Metra NC 50 STH, Metra NC 65 STH, Metra NC 68 STH, MKF Serie TKI 602, Ponzio Windstop 65 tt, Showa Front

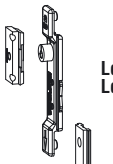

Locking plate
Locking pin element

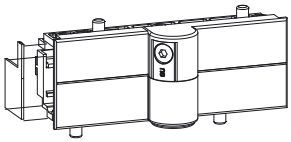

Vertical pivot
UNITAS 88

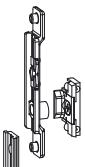

Locking pin
element
Locking plate

Fitting requirements according to profile system

Qty.	Description	PU	Metra NC 50 STH	Metra NC 65 STH	Metra NC 68 STH
1	Vertical pivot UNITAS 88 (pair)	1	6-27337-10-P-*	6-27337-10-P-*	6-27337-07-P-*
1	Bag of coupling bar G 12	20	K-14426-01-*-*	K-14426-01-*-*	K-14426-01-*-*
1	Handle DIRIGENT	1	6-29187-30-0-*	6-29187-30-0-*	6-29187-30-0-*
1	Box of locking system UNITAS 88	1	K-14729-00-0-1	K-14729-00-0-1	K-14729-00-0-1
1	For slit ventilation	1	6-25982-00-0-0	6-25982-00-0-0	6-25982-00-0-0
4	Gasket 20	1			9-35495-03-0-6

Optional parts and drilling jig

Automatic 180° locking latch	10	9-20017-00-0-*	9-20017-00-0-*	9-20017-00-0-*
Bag of limiting stay	1	K-13393-00-0-1	K-13393-00-0-1	K-13393-00-0-1
Drilling jig for vertical pivot	1	6-27419-00-0-0	6-27419-00-0-0	6-27419-00-0-0

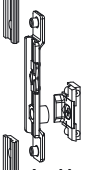

Locking pin
element
Locking plate

Fitting requirements according to profile system

Qty.	Description	PU	MKF Serie TKI 602	Ponzio Windstop 65 tt	Showa Front
1	Vertical pivot UNITAS 88 (pair)	1	6-27337-10-P-*	6-27337-07-P-*	6-27337-10-P-*
14	Countersunk screw	400	9-13133-30-0-0	9-13089-09-0-0	9-13133-30-0-0
1	Bag of coupling bar G 12	20	K-14426-01-*-*	K-14426-01-*-*	K-14426-02-*-*
1	Handle DIRIGENT	1	6-29189-30-0-*	6-29189-30-0-*	6-29189-30-0-*
1	Mill-in gear alu 90°	10	6-25948-30-0-1	6-25948-35-0-1	6-25948-32-0-1
2	Countersunk screw	400	9-13133-25-0-0	9-13089-60-0-8	9-13133-40-0-0
2	Corner transmission	100	6-24529-00-0-1	6-24529-00-0-1	6-24529-10-0-1
4	Locking pin	100			A-02823-00-0-0
4	Locking pin element	100	6-24539-00-0-1	6-24539-00-0-1	
3	Locking plate frame	100	9-31758-00-0-7	G-11071-00-0-1	6-27358-00-0-8
3	Locking plate reversible profile	100	6-24666-00-0-1	6-24666-00-0-1	6-27358-00-0-8
1	For slit ventilation	1			

Optional parts and drilling jig

Automatic 180° locking latch	10	9-20017-00-0-*	9-20017-00-0-*	9-20017-00-0-*
Bag of limiting stay	1	K-13393-00-0-1	K-13393-00-0-1	K-13393-00-0-1
Drilling jig for vertical pivot	1	6-27419-00-0-0	6-27419-00-0-0	9-33687-00-0-0

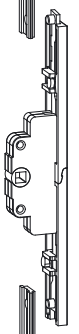

Mill-in gear
alu 90°
For slit ventilation

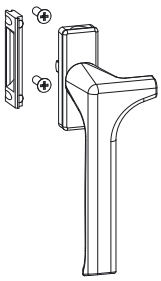

Handle DIRIGENT
Countersunk screw

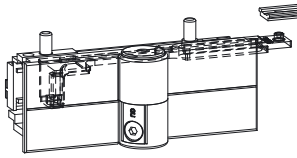

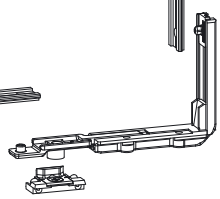

Corner transmission
Locking plate

Corner transmission
Locking plate

Vertical pivot
UNITAS 88

Profile system Thyssen-Schulte TSB W 70

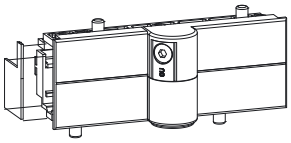

Vertical pivot
UNITAS 88

Locking plate
Locking pin element

Locking pin
element
Locking plate

Locking pin
element
Locking plate

Mill-in gear
alu 90°
For slit ventilation

Handle DIRIGENT
Countersunk screw

Corner transmission
Locking plate

Corner transmission
Locking plate

Vertical pivot
UNITAS 88

Fitting requirements according to profile system

Qty.	Description	PU	**Thyssen-Schulte TSB W 70**
1	Vertical pivot UNITAS 88 (pair)	1	6-27337-10-P-*
14	Countersunk screw	400	9-13133-25-0-0
1	Bag of coupling bar G 12	20	K-14426-01-*-*
1	Handle DIRIGENT	1	6-28112-25-0-*
1	Mill-in gear alu 90°	10	6-25948-30-0-1
2	Countersunk screw	400	9-13133-16-0-0
2	Distance piece	1	9-37620-00-0-0
2	Corner transmission	100	6-24529-00-0-1
4	Locking pin element	100	6-24539-00-0-1
3	Locking plate frame	100	6-24666-00-0-1
3	Locking plate reversible profile	100	G-11800-00-0-1
1	For slit ventilation	1	6-25982-00-0-0

Optional parts and drilling jig

Automatic 180° locking latch	10	9-20017-00-0-*
Bag of limiting stay	1	K-13393-00-0-1
Drilling jig for vertical pivot	1	6-27419-00-0-0

Product group

G

Fan-light openers and electric drives

7

Fan-light openers – face-fixed
Electric drives, chain drives, spindle drives and rack and pinion drives, miscellaneous fittings for timber windows

Fan-light openers, face-fixed

Introduction, product information

Optional parts

Fitting requirements, sets

Electric drives, chain drives, spindle drives and rack and pinion drives

Drilling jigs and auxiliary tools

Miscellaneous fittings

Introduction, product information

Fitting requirements

Order catalogue part 7
Fan-light openers, face-fixed

Contents

Part 7 of the present order catalogue contains fan-light openers for aluminium windows, vertical and corner gears, electric drives and accessories according to the latest state of the art.

The following indications will make you familiar with the concept of the catalogue and help you to handle it easily.

Catalogue structure

The present catalogue part is structured in the following way:
– Optional parts and turn handles
– Sets

Sets

Optional parts
The option pages show you optional parts for face-fixed fan-light openers at a glance. All supplements of standard versions are clearly arranged.

Fitting requirements according to sash size and scheme
The illustrations of the fittings are supplemented by corresponding parts tables helping to determine the hardware composition.
Parts supplementing standard versions are clearly presented and can be easily selected.

Order numbers

The order number gives information about
– the article
– its size
– its application - e.g. lh or rh assembly
– its colour/finish

Example
Order number
6-24841-50-0-1

6-24841- - -	Article number
- -50- -	Size
- - -L-	Left hand assembly
- - -R-	Right hand assembly
- - -0-	Usable on both sides
- - - -1	F 1/EV 1, natural (silver colour), fer**GU**ard*silver
- - - -2	F 2/EV 2, champagne colour
- - - -3	F 3, brass colour or gold colour
- - - -4	UC 3, middle bronze or middle brown
- - - -A	F 4, bronze or bronze colour
- - - -C	titan colour
- - - -5	UC 5, dark bronze or dark brown
- - - -6	Onyx matt or black (RAL 9005)
- - - -7	White (RAL 9016)
- - - -7T	White (RAL 9010)
- - - -8	Stainless steel or stainless steel colour
- - - -*	Surface treatment variable (available colours see price list)

Prices

Single part price list "Total programme"
The prices are listed by ascending article numbers.

Additional sales documentation

Apart from the order catalogue, the following documentation on lift-slide and lift-tilt-slide fittings is available:
– Brochures and leaflets informing about product features and advantages
– Order sheets for the specialized trade
– Assembly drawings with mounting instructions
– Instructions for maintenance and care

Fan-light openers, face-fixed for aluminium windows

Application

Range of applications for face-fixed fan-light openers:
- Bottom hung inward opening or top hung outward opening windows with one or more sashes
- Installation for group ventilation as well as smoke and heat evacuation.

Designs

Fan-light opener VENTUS F 200
Slimline, unobtrusive opener with force locked horizontal stay arms for rectangular, oblique angle head, arch head and segmental arch head tilt windows. Vertical and horizontal rods covered with clip-on aluminium profile.

Fan-light opener VENTUS F 300
Slimline, unobtrusive opener with force locked horizontal stay arms for rectangular, oblique angle head tilt windows. Vertical and horizontal rods covered with clip-on aluminium profile.

Operation variants

- Lever handle
- Lever handle and flexible transmission
- Vertical gear, articulated crank rod fixed or removable
- Corner gear, articulated crank rod fixed or removable
- Vertical or corner gear with transmissions
- Electrical drives for individual control
- Electrical drives for group control

Group ventilation installations

Operation of ventilation sashes by electric drives ELTRAL. For electric drives an additional individual control is possible.

Special fan-light opener versions

Apart from the standard versions presented in this catalogue, manifold project related solutions are possible. Prices on request.

Standard colours

Colour EV 1
- Aluminium parts anodized in natural tone
- Other visible parts in silver colour

Colour UC 3
- Aluminium parts anodized in medium bronze colour
- Other visible parts in medium brown

Colour UC 5
- Aluminium parts anodized in dark bronze colour
- Other visible parts in dark brown

White
- Aluminium parts with white lacquer finish (RAL 9016)
- Other visible parts in white colour (RAL 9016)

Further colours and finishes on request.

Materials, surface sealing fer**GU**ard*silver

The fitting parts are made of high quality steel, zinc die-casting or aluminium alloys.
Depending on the material, they are protected against corrosion by surface sealing with fer**GU**ard*silver or by anodisation (aluminium parts).

Abbreviations and ordering dimensions

B	Total sash width
B-E	Sill to bottom edge of lever handle or articulated crank handle (straight)
D	Centre of vertical rod to edge of sash
E -B	Top edge of sash on operation side to sill for oblique angle head and segmental arch head windows
E -E	Top edge of sash on operation side to bottom edge of lever handle or articulated crank handle (straight) for oblique angle head and segmental arch head windows
FB	Sash width
FBs	Sash width for oblique angle head windows
FH	Sash height
FHf	Sash height on angular sash bracket for oblique angle head windows
O-B	Top edge of sash to sill
O-End	Top edge of sash to bottom edge of lever handle or articulated crank handle (straight)
Ö	Opening width of sash
PU	Packing unit
r	Radius
RLB	Frame width in the clear (top hung sash opening outward)
RLH	Frame height in the clear (top hung sash opening outward)
T	Depth of reveal
U-B	Bottom edge of sash to sill, springing of arch to sill for arch head windows
U-E	Bottom edge of sash to bottom edge of lever handle or articulated crank handle (straight), springing of arch to bottom edge of lever handle or articulated crank handle (straight)
Ü	Projection of window sill
x	Installation height for vertical and corner gears
y	Sash backset of outward opening windows
z	Distance between individual sashes

Profile system manufacturers' information

It is important to observe the product information issued by the profile system manufacturers, especially information concerning construction and fabrication, maximum sash dimensions and weights and material features such as linear expansion of profiles.

Dimension "Opening width"

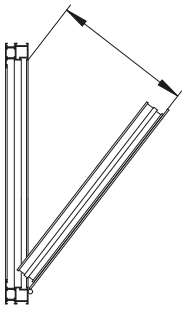

Opening width

G.U security stay EURO-SOLID

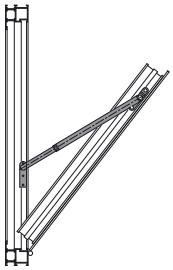

According to RAL regulations, tilt sashes fitted with fan-light hardware must be provided with additional catching stays.
G.U security stays Euro-Solid prevent dammage that might occur when opening stays are improperly mounted.

Assembly drawing 0-43278

Application

Type of fittings	Sash width Dim. SW mm	Sash height Dim. SH min. mm	Opening width mm	Sash weigth max. kg	Stroke mm	O-E min. mm	Space requirement lateral mm	Space requirement top mm	Rod Ø mm	Standard assembly drawing
VENTUS F 200	400-3600 [1] 400-3600	300 250	200 [1] 165	80	50 [1] 40	440	20	20	8	0-43700-1
VENTUS F 300	620-3600	350	300 [1] 220	200	70 [1] 50	570	26	26	10	0-42700-1

[1] Standard version

Group ventilation installations with electric drives

Group ventilation installation with 1 operating point according to figure A

Qty.	Description
1 - 8	Electric drive ELTRAL S 230 L, ELTRAL S 230 E Electric drive ELTRAL 300 E1
1	Rocker switch, single-pole

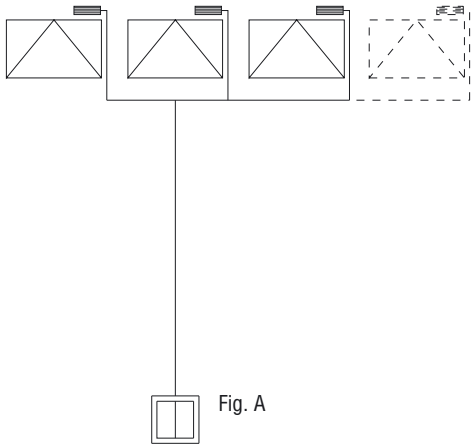

Fig. A

Range of application according to Dim. „S“ – operation with lever handle, vertical gear or corner gear

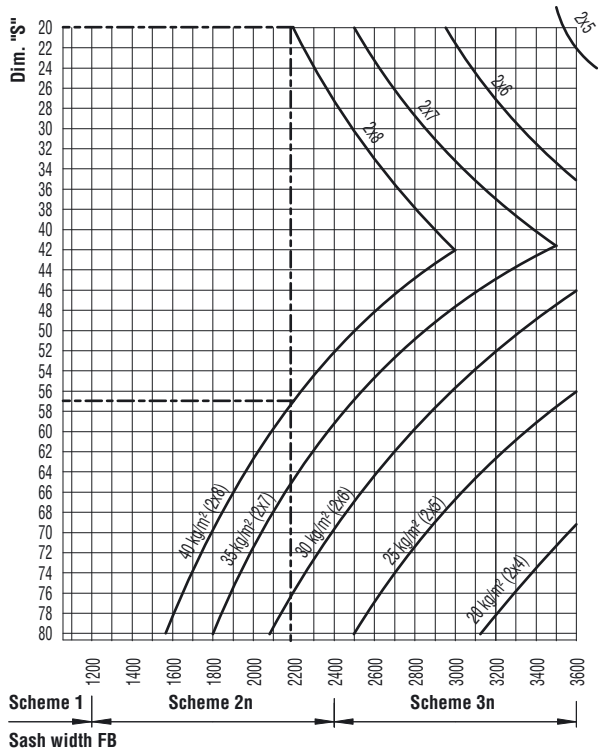

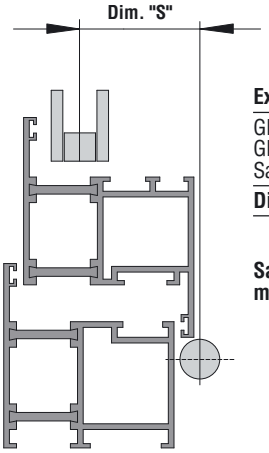

Example:

Glazing	2 x 8 mm
Glass weight	40 kg/m²
Sash width	2200 mm
Dim. "S"	**20 – 57 mm possible**

Sash weight max. 80 kg

Fan-light opener VENTUS F 200

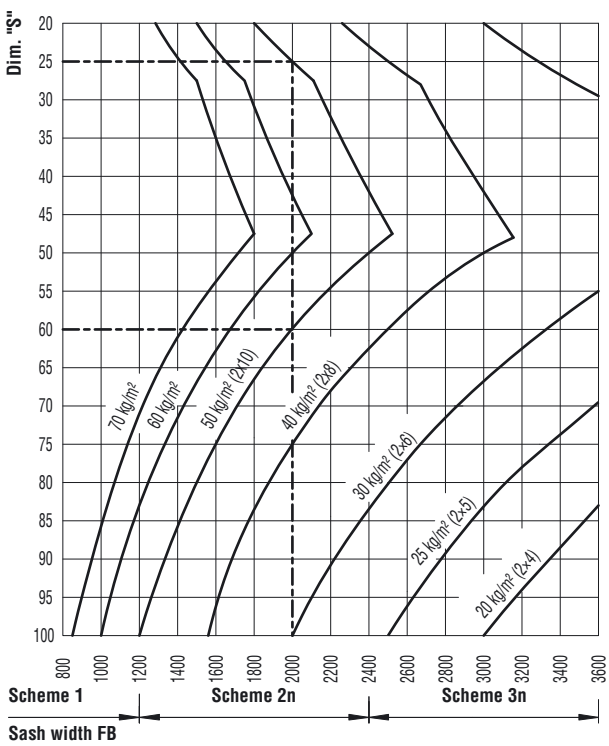

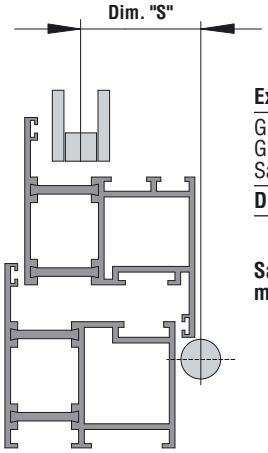

Example:

Glazing	2 x 10 mm
Glass weight	50 kg/m²
Sash width	2000 mm
Dim. "S"	**25 – 60 mm possible**

Sash weight max. 200 kg

Fan-light opener VENTUS F 300

Fan-light openers, face-fixed for aluminium windows assembly drawings, G.U security and rebate stays

Aluminium profile systems

Profile systems	Sash profile	Frame profile	Assembly drawings VENTUS F 200	VENTUS F 300	Security stay	Rebate stay
Akotherm	1506	1503			EURO-SOLID	
Alcoa RT 620	734 077	717 876			EURO-SOLID	K-13393-00-0-1
Alcoa RT 620	734 075	717 832			EURO-SOLID	K-13393-00-0-1
Alisol 3	V 76007	V 73210				
Alisol 3	V 76104	V 75116		0-42985-4	EURO-SOLID	
Alsec 2000 Serie 59	CH 52534	CH 52731				
Brökelmann Conform	RG 6211	RG 6121			EURO-SOLID	
Bug 90	831 602	831 614				
EurAl Serie 65	162 200	161 100				K-13393-00-0-1
Finstral S 70						
Forster (Stahl)	500 600	502 565				
Hansen System 55	550 30550	550 10381	0-43339-4	0-43335-4		
Heroal Serie 30	30	31			EURO-SOLID	K-13393-00-0-1
Heroal Serie 40	6401	6423			EURO-SOLID	
Heroal Serie 40	6401	6422			EURO-SOLID	
Heroal Serie 65	9301	9322			EURO-SOLID	
Hueck 1.0	510200	510101			EURO-SOLID	
Hueck AK 80	578 200	578 100			EURO-SOLID	
Isal 99						
Isopro (Stahl)	ip-63620	ip-01541				
Jansen (Stahl)						
Kubal					EURO-SOLID	
Metra 65	265 101	165 108				
MKF TKI 602					EURO-SOLID	
Pesalu	7001069	4201041				
Redal	33.202	33.225			EURO-SOLID	
SAPA-Ekonal i70	42330	42001			EURO-SOLID	
Schüco Royal 64w	108 580	104 610				
Schüco Royal S						
Sidal nc 60 S	873	863				
Sykon					EURO-SOLID	
Thyssen-Schulte TSB W 70	W70 51348	W70 14146	0-43803-1		EURO-SOLID	K-13393-00-0-1
VAW	000 379	002 279			EURO-SOLID	
Wicline	110051	110001			EURO-SOLID	

Assembly dimensions

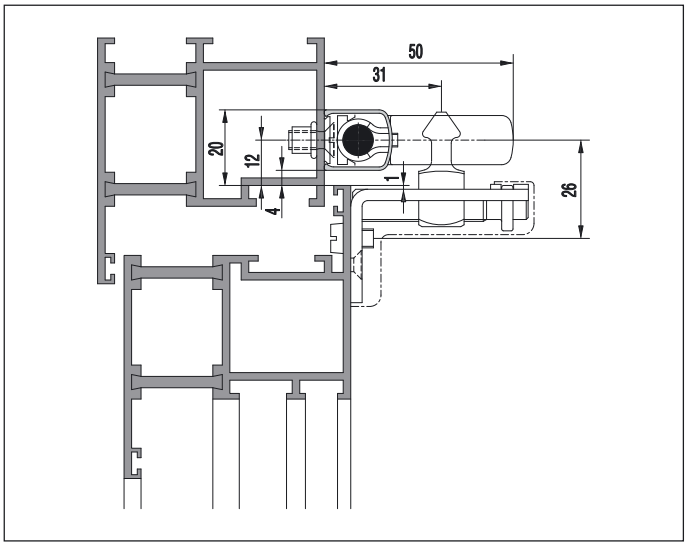

Fan-light openers VENTUS F 200

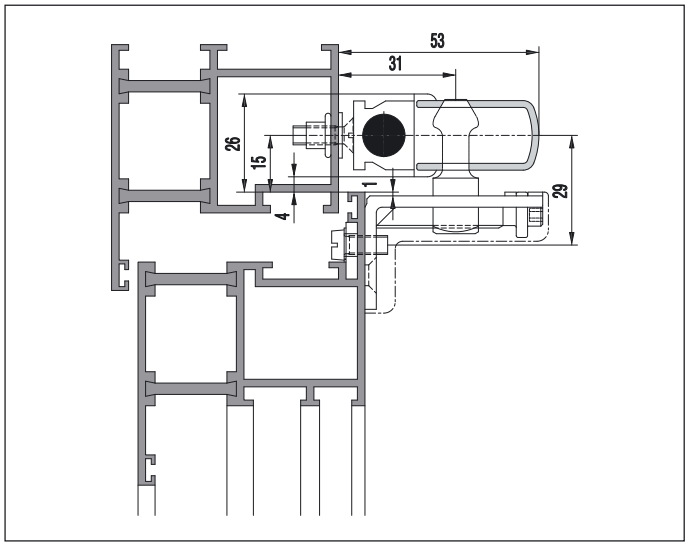

Fan-light openers VENTUS F 300

Fan-light openers, face-fixed for aluminium windows

Profile systems with 16 mm fitting groove

Profile manufacturer	Profile system	Sash overlap mm	Groove position mm	Frame groove	Frame groove Dim. A	Frame groove Dim. B
Alco	Alousystem 550	20,0	13,0	14/18	1,5	4,0
Almaco		18,0	9,0	14/18		
Alumil	M 11000 M 11500 M 20000	18,0 18,0 18,0	9,0 9,0 9,0	14/18 14/18 14/18	1,5 1,5 1,5	3,5 3,5 3,5
Aluminco		20,0	9,0	14/18	1,5	3,5
Domal	Bright PA70S	18,0	9,0	14/18	1,5	3,5
Elvial	4300 4600 5400 5600 5700 6700 6800 Optimum	18,0 18,0 18,0 18,0 18,0 18,0 18,0	9,0 9,0 9,0 9,0 9,0 9,0 9,0	14/18 14/18 14/18 14/18 14/18 14/18 14/18	1,5 1,5 1,5 1,5 1,5 1,5 1,5	4,0 4,0 4,0 4,0 4,0 4,0 4,0
Europa	5000	18,0	9,0	14/18	1,5	3,5
Etem	E40	20,0	9,0	14/18	2,0	4,0
Exalco	Albio 109C	18,0	9,0	14/18	1,3	3,9
Heroal	Serie 065 Serie 065i Serie 065f Serie 090 Serie 090 S Serie 110 ES Serie 20 Serie 25	18,0 18,0 18,0 18,0 18,0 18,0 18,0 18,0	9,0 9,0 9,0 9,0 9,0 9,0 9,0 9,0	10/14 10/14 10/14 10/14 10/14 10/14 10/14 10/14	2,0 2,0 2,0 2,0 2,0 2,0 2,0 2,0	4,3 4,3 4,3 4,3 4,3 4,3 4,3 4,3
Kawneer	Kalory	20,0	9,0	10/14		4,0
Nordall	78TTF	18,0	9,0	14/18	1,5	3,5
Ponzio	Windstop 55TT	18,0	9,0	14/18	2,0	4,0
TS-Aluminium	65	18,0	9,0	14/18	2,0	4,0

Profile systems with Euro groove 15/20

Profile manufacturer	Profile system	Frame groove
Akotherm	Serie AT 600 Serie AT 730	12/15 12/15
Alcan	Serie 6500 Serie Contact Serie PA110	12/15 12/15 12/15
Alcoa	AA 610 AA 611 AA 630 AA 720 RT 55 RT 620	10/14 10/14 10/14 10/14 10/14 10/14
Alisol	3	14/18
Alsec	Serie 59	14/18
Aluminco		14/18
EurAl	Serie 65 Serie 75 Serie 75/1.0	14/18 14/18 14/18
Forster	Unico	plane groove
Hueck	Serie 1.0 Serie 2.1	Special groove Special groove
Redal	Serie 64	14/18
Reynaers	CS 24-SL CS 38-SL CS 59 CS 59PA CS 68 CS 77 CS 86-HI ECO System	14/18 14/18 14/18 14/18 14/18 14/18 14/18 14/18

Profilhersteller	Profile system	Frame groove
Sapa	Confort 26 Ekonal i65 Ekonal i70 Ekonal i75 ES 60 RC Confort 125	14/18 14/18 14/18 14/18 14/18 14/18
Schüco Royal	AWS 65 AWS 65 BS AWS 70 ST.HI AWS 70 WF.HI AWS 70.HI AWS 75 BS.HI AWS 75.SI	Special groove Special groove Special groove Special groove Special groove Special groove Special groove
TS-Aluminium	65	14/18
VAW	Serie 75E	14/18
Wicona	WICLINE 125 WICLINE 65 WICLINE 65 HI WICLINE 65N WICLINE 77 WICLINE 77 HI WICLINE 77 Industriekontur	Special groove Special groove Special groove Special groove Special groove Special groove Special groove

Fan-light openers, face-fixed

Fan-light opener VENTUS F 200

Lever handle
Stroke
40 mm 6-28681-40-0-*

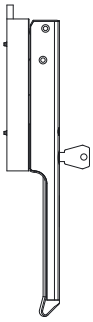

Lever handle, lockable
Stroke
50 mm 6-32100-50-0-*
40 mm 6-32100-40-0-*

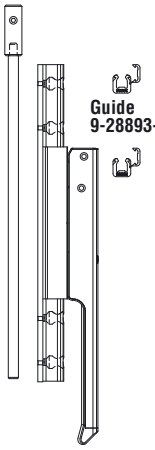

Guide
9-28893-00-0-0

Swivelling lever handle
Stroke
50 mm K-12608-00-0-*
AD 0-44366

Accessories for
vertical rod, Ø 8 mm

Sleeve
6-22842-00-0-1

Guide
9-28893-00-0-0

Guide for transmission
9-33711-00-0-*

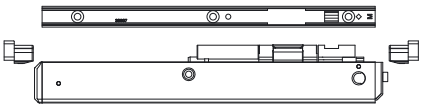

Stay arm bearing
6-29134-00-0-*
Stay with lift-off security device
6-29589-00-0-*
Rod bearing (2 pieces)
9-38016-00-0-0

Fixing plate
for lever handle
9-33787-00-0-*

Bag of T angle VENTUS F 200

T cover
9-37591-00-0-*

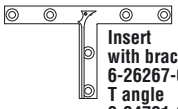

Insert
with brace
6-26267-00-0-1
T angle
9-34721-00-0-1

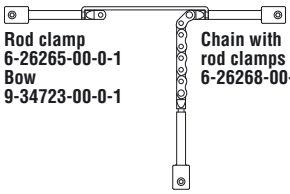

Rod clamp
6-26265-00-0-1
Bow
9-34723-00-0-1

Chain with
rod clamps
6-26268-00-0-1

Bag of T angle VENTUS F 200
K-14194-00-0-*

Assembly drawing 0-43822

Fan-light opener VENTUS F 300

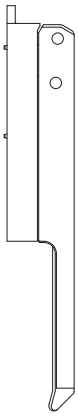

Lever handle
Stroke
50 mm 6-26249-50-0-*

Guide
9-34491-00-0-0

Guide
9-34491-00-0-0

Swivelling lever handle
Stroke
50 mm K-14242-50-0-*
70 mm K-14242-70-0-*

Accessories for
vertical rod, Ø 10 mm

Sleeve
6-26813-00-0-1

Guide
9-34491-00-0-0

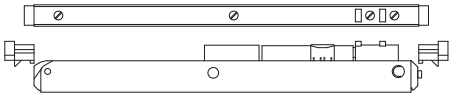

Stay with lift-off security device
6-27451-00-0-*
Stay arm bearing
6-26244-00-0-*
Rod bearing (2 pieces)
9-34458-00-0-0

Bag of T angle VENTUS F 300

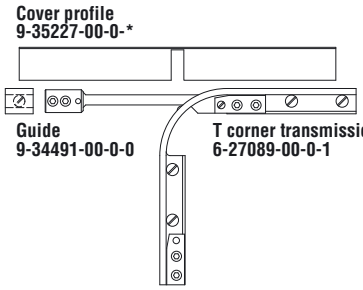

Cover profile
9-35227-00-0-*

Guide
9-34491-00-0-0

T corner transmission
6-27089-00-0-1

Bag of T angle VENTUS F 300
K-14201-00-R-*
(rh/lh convertable)

Assembly drawing 0-43037

Electric drives

Electric drives 230 V

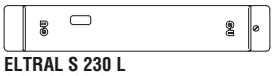

ELTRAL S 230 L
6-31730-00-0-*
ELTRAL S 230 E
6-31732-00-0-*

ELTRAL 300 E1
9-31020-01-0-*

Electric drives 24 V

ELTRAL S 24 L
6-31734-00-0-*

ELTRAL 300/24
9-31021-00-0-*

Radio remote control

Hand-held transmitter 42 FH
9-42496-00-0-0

Radio actuator FAJ 6 UP
9-42495-00-0-0
Installation in flush-mounted socket
230 V AC 50Hz
Power rating:
250 V ~
700 VA

Fan-light openers, face-fixed

Fan-light opener VENTUS F 200 Se

UNI-JET locking mechanism in the rebate

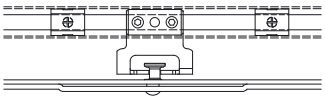

Fitting requirements according to sash overlap and groove

Application	Size 1 Alu window	Size 2 Alu window	Size 3 Alu window
Sash overlap Groove position	18 mm 9 mm	18 mm 9 mm or 13 mm	20 – 22 mm 9 mm or 13 mm
Article No.	**K-16718-01-0-***	**K-16718-02-0-***	**K-16718-03-0-***
Contents			
1 JET engaging fork	6-32154-01-0-1	6-32154-02-0-1	6-32154-03-0-1
2 guide	9-28893-00-0-0	9-28893-00-0-0	9-28893-00-0-0
1 cover profile[1]	9-39509-00-0-*	9-39509-00-0-*	9-39509-00-0-*

[1] = length 250 mm – with cut-out

Assembly drawing 0-43813

Telescopic spindle drive

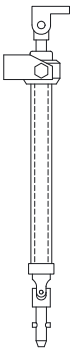

Fitting requirements for pushing force up to 400 N

Qty.	Description	PU	Article No.
1	**Telescopic spindle drive for top hung windows and light domes** Technical data Stroke mm 300 Length of gear mm 222	1	6-24869-00-0-1
1	**Crank rod** (not illustrated) – to be cut from: Aluminium tube, L = 5000 mm	1	9-32230-50-0-*
1	**Bag of hinged crank** for articulated crank handle	1	K-13162-00-0-*
1	**Bag of coupling horn** for removable crank rod	1	K-13165-00-0-1

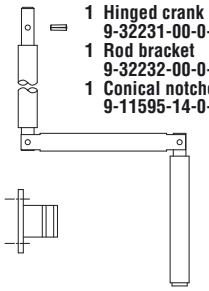

1 Hinged crank
9-32231-00-0-*
1 Rod bracket
9-32232-00-0-*
1 Conical notched pin
9-11595-14-0-1

Bag of hinged crank
K-13162-00-0-*

1 Coupling horn
9-29570-00-0-1
1 Conical notched pin
9-11595-14-0-1

Bag of coupling horn
K-13165-00-0-1

Assembly drawing 0-40636

Vertical gear and corner gear

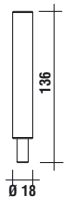

Load-limiting device
6-31245-00-0-1
for VENTUS F 200 and
VENTUS F 300
Release torque 4 Nm

Assembly drawing 0-44556

Fan-light openers, face-fixed

Fan-light opener VENTUS F 200

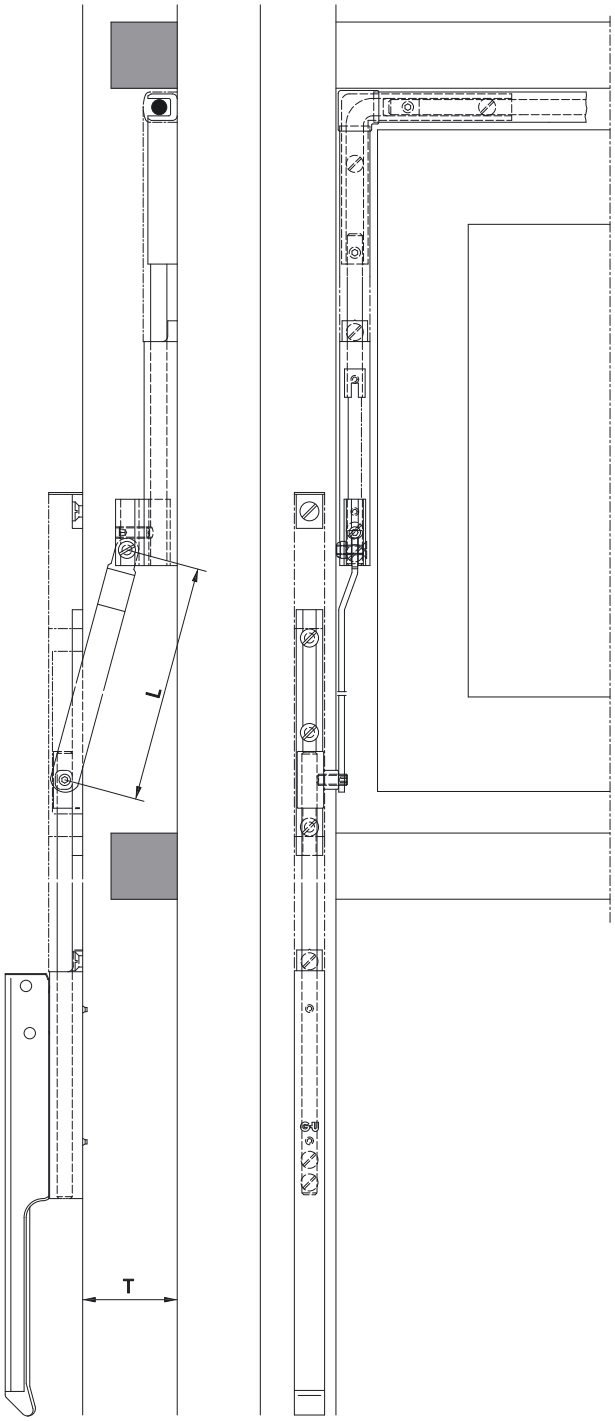

Mullion passage transmission

Box of mullion passage transmission
K-15384-08-0-*

Mullion depth T	17 to 80 mm
Mullion depth L	126 mm

Box of mullion passage transmission
K-15384-15-0-*

Mullion depth T	17 to 150 mm
Mullion depth L	266 mm

Single parts

1	mullion transmission	6-29260
1	guide	9-33600
1	gliding profile	9-28888
1	locking part	9-35860
1	cover profile	9-33443
1	end cap	9-34412

Assembly drawings

Tilt sash	0-43889
Top hung sash	0-44206

Standard version
Lever handle

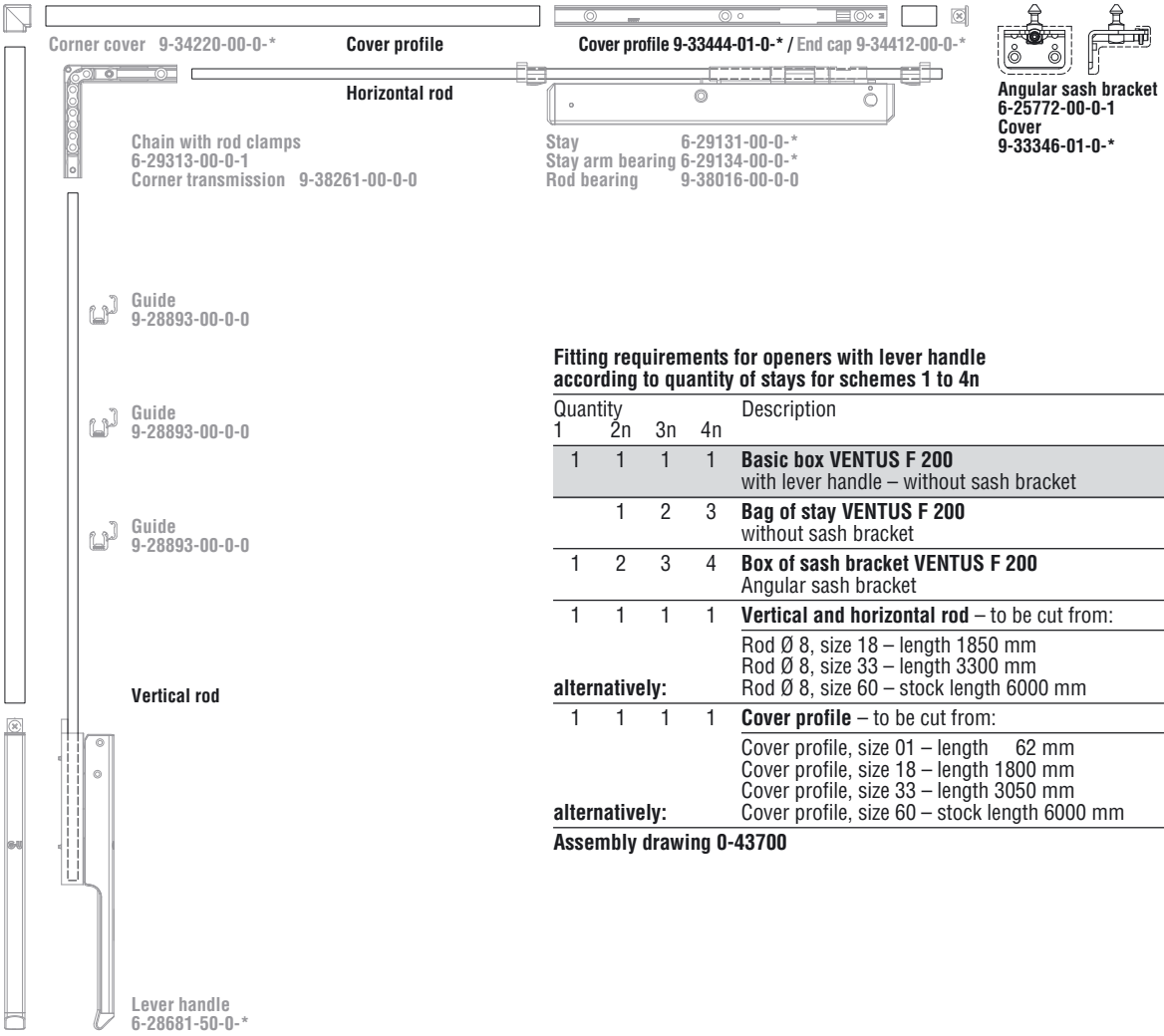

Fitting requirements for openers with lever handle according to quantity of stays for schemes 1 to 4n

Quantity 1	2n	3n	4n	Description	PU	Article No.
1	1	1	1	**Basic box VENTUS F 200** with lever handle – without sash bracket	1	K-15011-00-0-*
	1	2	3	**Bag of stay VENTUS F 200** without sash bracket	10	K-15013-00-0-*
1	2	3	4	**Box of sash bracket VENTUS F 200** Angular sash bracket	10	K-15225-00-0-*
1	1	1	1	**Vertical and horizontal rod** – to be cut from:		
				Rod Ø 8, size 18 – length 1850 mm	10	9-25476-18-0-1
				Rod Ø 8, size 33 – length 3300 mm	10	9-25476-33-0-1
			alternatively:	Rod Ø 8, size 60 – stock length 6000 mm	10	9-25476-60-0-1
1	1	1	1	**Cover profile** – to be cut from:		
				Cover profile, size 01 – length 62 mm	10	9-33444-01-0-*
				Cover profile, size 18 – length 1800 mm	10	9-33444-18-0-*
				Cover profile, size 33 – length 3050 mm	10	9-33444-33-0-*
			alternatively:	Cover profile, size 60 – stock length 6000 mm	10	9-33444-60-0-*

Assembly drawing 0-43700

Standard version
Vertical gear

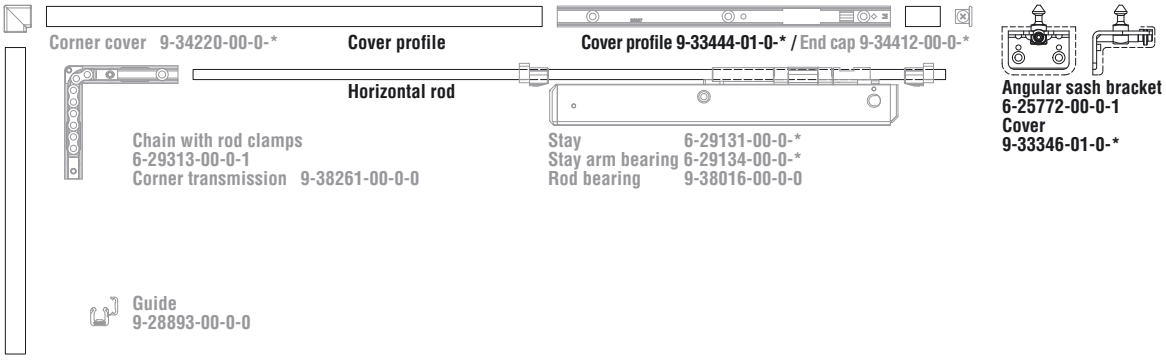

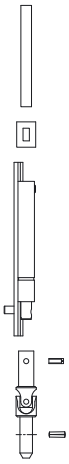

1 Connecting rod
9-25476-05-0-1
1 Lift stop
Stroke 40
9-33313-00-0-3

1 Vertical gear
Model A
6-25766-00-0-1

1 Universal joint
for gear
9-33323-00-0-1
1 Screw
9-33322-00-0-0
1 Conical notched pin
9-11595-14-0-1

Bag of vertical gear
K-13402-00-0-1

Fitting requirements for openers with vertical gear according to quantity of stays for schemes 1 to 4n

Quantity 1	2n	3n	4n	Description	PU	Article No.
1	1	1	1	**Basic box VENTUS F 200** without lever handle – without sash bracket	1	K-15012-00-0-*
	1	2	3	**Bag of stay VENTUS F 200** without sash bracket	10	K-15013-00-0-*
1	2	3	4	**Box of sash bracket VENTUS F 200** Angular sash bracket	10	K-15225-00-0-*
1	1	1	1	**Horizontal rod** – to be cut from:		
				Rod Ø 8, size 06 – length 600 mm	10	9-25476-06-0-1
				Rod Ø 8, size 18 – length 1850 mm	10	9-25476-18-0-1
				Rod Ø 8, size 33 – length 3300 mm	10	9-25476-33-0-1
			alternatively:	Rod Ø 8, size 60 – stock length 6000 mm	10	9-25476-60-0-1
1	1	1	1	**Cover profile** – to be cut from:		
				Cover profile, size 01 – length 62 mm	10	9-33444-01-0-*
				Cover profile, size 06 – length 800 mm	10	9-33444-06-0-*
				Cover profile, size 18 – length 1800 mm	10	9-33444-18-0-*
				Cover profile, size 33 – length 3050 mm	10	9-33444-33-0-*
			alternatively:	Cover profile, size 60 – stock length 6000 mm	10	9-33444-60-0-*
1	1	1	1	**Bag of vertical gear**, model A	1	K-13402-00-0-1

Assembly drawing 0-43700

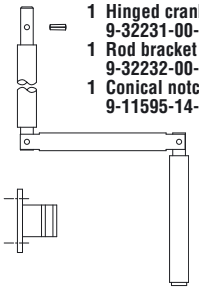

1 Hinged crank
9-32231-00-0-*
1 Rod bracket
9-32232-00-0-*
1 Conical notched pin
9-11595-14-0-1

Bag of hinged crank
K-13162-00-0-*

Fitting requirements for articulated crank rod and accessories according to types a to h for vertical and corner gears

Types a	b	c	d	e	f	g	h	Description	PU	Article No.
1	1	1	1	1	1	1	1	**Crank rod** (not illustrated) – to be cut from: aluminium tube, stock length 5000 mm	1	9-32230-50-0-*
1	1	1	1	1	1	1	1	**Bag of hinged crank**	1	K-13162-00-0-*
		1	1	2	2	1	1	**Bag of universal joint** for crank rod	1	K-13164-00-0-1
	1		1		1		1	**Bag of coupling horn**	1	K-13165-00-0-1

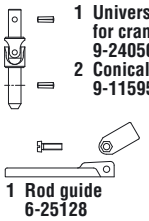

1 Universal joint
for crank rod
9-24050-00-0-1
2 Conical notched pin
9-11595-14-0-1

1 Rod guide
6-25128

Bag of universal joint
for crank rod
K-13164-00-0-1

1 Coupling horn
9-29570-00-0-1
1 Conical notched
pin
9-11595-14-0-1

Bag of coupling
horn
K-13165-00-0-1

Standard version
Corner gear

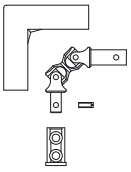

1 Cover
9-33337-00-0-*
1 Double universal joint
9-33333-00-0-1
1 Bearing
9-33335-00-0-0
1 Screw
9-33322-00-0-0

Bag of corner gear
K-13403-00-0-*

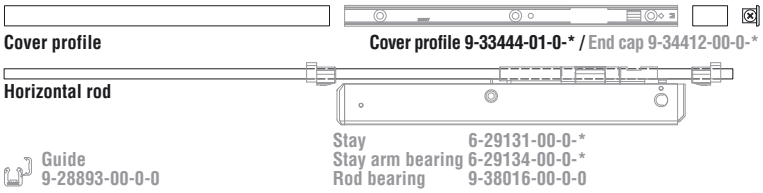

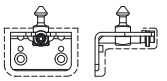

Angular sash bracket
6-25772-00-0-1
Cover
9-33346-01-0-*

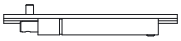

1 Vertical gear Model A
6-25766-00-0-1

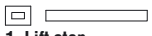

1 Lift stop Stroke 40
9-33313-00-0-3
1 Connecting rod
9-25476-05-0-1

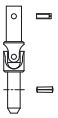

1 Universal joint for gear
9-33323-00-0-1
1 Screw
9-33322-00-0-0
1 Conical notched pin
9-11595-14-0-1

Bag of vertical gear
K-13402-00-0-1

Fitting requirements for openers with corner gear according to quantity of stays for schemes 1 to 4n

Quantity 1	2n	3n	4n	Description	PU	Article No.
1	2	3	4	**Bag of stay VENTUS F 200** without sash bracket	10	K-15013-00-0-*
1	1	1	1	**End cap**	1	9-34412-00-0-*
1	2	3	4	**Box of sash bracket VENTUS F 200** Angular sash bracket	10	K-15225-00-0-*
1	1	1	1	**Horizontal rod** – to be cut from:		
				Rod Ø 8, size 06 – length 600 mm	10	9-25476-06-0-1
				Rod Ø 8, size 18 – length 1850 mm	10	9-25476-18-0-1
				Rod Ø 8, size 33 – length 3300 mm	10	9-25476-33-0-1
				alternatively: Rod Ø 8, size 60 – stock length 6000 mm	10	9-25476-60-0-1
1	1	1	1	**Cover profile** – to be cut from:		
				Cover profile, size 01 – length 62 mm	10	9-33444-01-0-*
				Cover profile, size 06 – length 800 mm	10	9-33444-06-0-*
				Cover profile, size 18 – length 1800 mm	10	9-33444-18-0-*
				Cover profile, size 33 – length 3050 mm	10	9-33444-33-0-*
				alternatively: Cover profile, size 60 – stock length 6000 mm	10	9-33444-60-0-*
1	1	1	1	**Bag of vertical gear**, model A	1	K-13402-00-0-1
1	1	1	1	**Bag of additional parts** for corner gear, model A	1	K-13403-00-0-*

Assembly drawing 0-43700

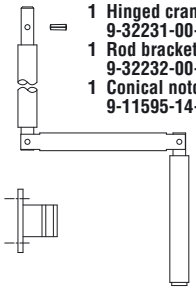

1 Hinged crank
9-32231-00-0-*
1 Rod bracket
9-32232-00-0-*
1 Conical notched pin
9-11595-14-0-1

Bag of hinged crank
K-13162-00-0-*

Fitting requirements for articulated crank rod and accessories according to types a to h for vertical and corner gears

Types a	b	c	d	e	f	g	h	Description	PU	Article No.
1	1	1	1	1	1	1	1	**Crank rod** (not illustrated) – to be cut from: aluminium tube, stock length 5000 mm	1	9-32230-50-0-*
1	1	1	1	1	1	1	1	**Bag of hinged crank**	1	K-13162-00-0-*
		1	1	2	2	1	1	**Bag of universal joint** for crank rod	1	K-13164-00-0-1
	1		1		1		1	**Bag of coupling horn**	1	K-13165-00-0-1

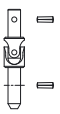

1 Universal joint for crank rod
9-24050-00-0-1
2 Conical notched pin
9-11595-14-0-1

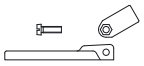

1 Rod guide
6-25128

Bag of universal joint for crank rod
K-13164-00-0-1

1 Coupling horn
9-29570-00-0-1
1 Conical notched pin
9-11595-14-0-1

Bag of coupling horn
K-13165-00-0-1

Standard version
ELTRAL, vertical installation on the side

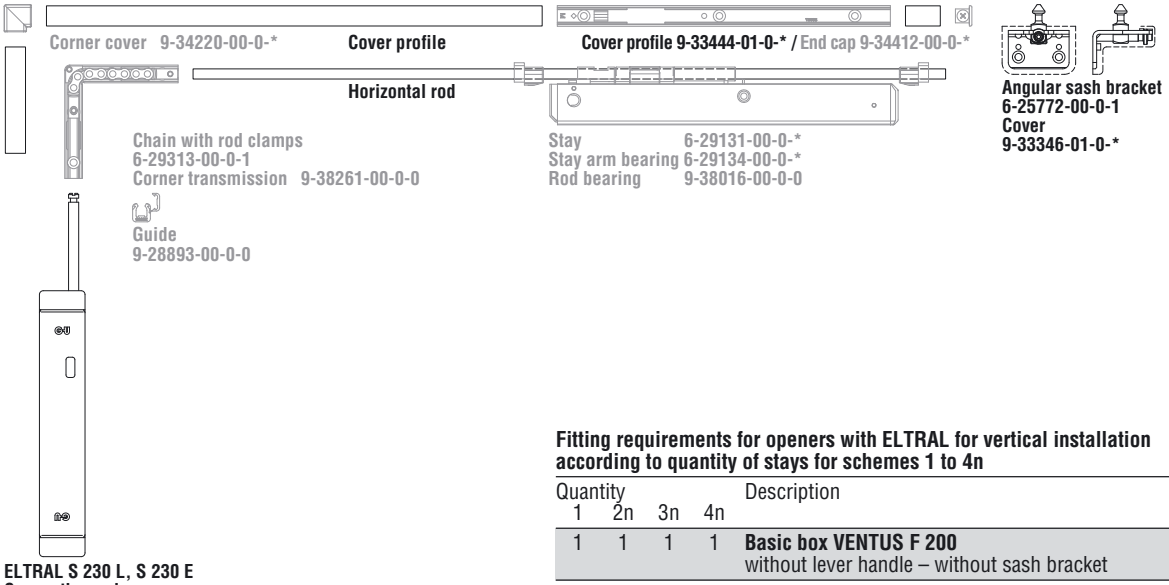

ELTRAL S 230 L, S 230 E
Connecting rod
9-34764-00-0-1

Fitting requirements for openers with ELTRAL for vertical installation according to quantity of stays for schemes 1 to 4n

Quantity 1	2n	3n	4n	Description	PU	Article No.
1	1	1	1	**Basic box VENTUS F 200** without lever handle – without sash bracket	1	K-15012-00-0-*
	1	2	3	**Bag of stay VENTUS F 200** without sash bracket	10	K-15013-00-0-*
1	2	3	4	**Box of sash bracket VENTUS F 200** Angular sash bracket	10	K-15225-00-0-*
1	1	1	1	**Horizontal rod** – to be cut from:		
				Rod Ø 8, size 06 – length 600 mm	10	9-25476-06-0-1
				Rod Ø 8, size 18 – length 1850 mm	10	9-25476-18-0-1
				Rod Ø 8, size 33 – length 3300 mm	10	9-25476-33-0-1
			alternatively:	Rod Ø 8, size 60 – stock length 6000 mm	10	9-25476-60-0-1
1	1	1	1	**Cover profile** – to be cut from:		
				Cover profile, size 01 – length 62 mm	10	9-33444-01-0-*
				Cover profile, size 06 – length 800 mm	10	9-33444-06-0-*
				Cover profile, size 18 – length 1800 mm	10	9-33444-18-0-*
				Cover profile, size 33 – length 3050 mm	10	9-33444-33-0-*
			alternatively:	Cover profile, size 60 – stock length 6000 mm	10	9-33444-60-0-*
1	1	1	1	**Electric drive ELTRAL S 230 L**	1	6-31730-00-0-*
			alternatively:	**Electric drive ELTRAL S 230 E**	1	6-31732-00-0-*
1	1	1	1	**Connecting rod**, Ø 8 mm, W = 400-3600	1	9-34764-00-0-1

Assembly drawing 0-43700, **assembly drawing ELTRAL 0-43791**

Standard version
ELTRAL, horizontal installation at the top

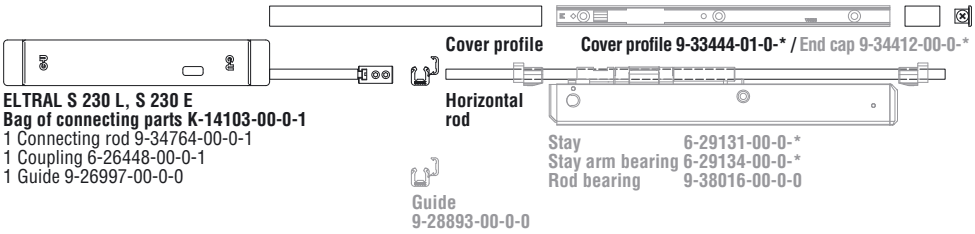

ELTRAL S 230 L, S 230 E
Bag of connecting parts K-14103-00-0-1
1 Connecting rod 9-34764-00-0-1
1 Coupling 6-26448-00-0-1
1 Guide 9-26997-00-0-0

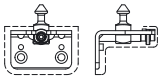

Angular sash bracket
6-25772-00-0-1
Cover
9-33346-01-0-*

ELTRAL 300
Bag of connecting parts K-15216-00-0-1
1 Connecting rod 9-31018-01-0-1
1 Coupling 6-29592-00-0-1

Fitting requirements for openers with ELTRAL for horizontal installation according to quantity of stays for schemes 1 to 4n

Quantity 1	2n	3n	4n	Description	PU	Article No.
1	2	3	4	**Bag of stay VENTUS F 200** without sash bracket	10	K-15013-00-0-*
1	1	1	1	**End cap**	1	9-34412-00-0-*
1	2	3	4	**Box of sash bracket VENTUS F 200** Angular sash bracket	10	K-15225-00-0-*
1	1	1	1	**Horizontal rod** – to be cut from:		
				Rod Ø 8, size 06 – length 600 mm	10	9-25476-06-0-1
				Rod Ø 8, size 18 – length 1850 mm	10	9-25476-18-0-1
				Rod Ø 8, size 33 – length 3300 mm	10	9-25476-33-0-1
			alternatively:	Rod Ø 8, size 60 – stock length 6000 mm	10	9-25476-60-0-1
1	1	1	1	**Cover profile** – to be cut from:		
				Cover profile, size 01 – length 62 mm	10	9-33444-01-0-*
				Cover profile, size 06 – length 800 mm	10	9-33444-06-0-*
				Cover profile, size 18 – length 1800 mm	10	9-33444-18-0-*
				Cover profile, size 33 – length 3050 mm	10	9-33444-33-0-*
			alternatively:	Cover profile, size 60 – stock length 6000 mm	10	9-33444-60-0-*
1	1	1	1	**Electric drive ELTRAL S 230 L**	1	6-31730-00-0-*
			alternatively:	**Electric drive ELTRAL S 230 E**	1	6-31732-00-0-*
1	1	1	1	**Bag of connecting parts**, W = 620-3600	1	K-14103-00-0-1
			alternatively:	**Electric drive ELTRAL 300 E1**	1	9-31020-01-0-*
			alternatively:	**Bag of connecting parts 300**, W = 650-3600	1	K-15216-00-0-1

Assembly drawing 0-43700, **assembly drawing ELTRAL 0-43791**

Standard version
Lever handle with additional side locking

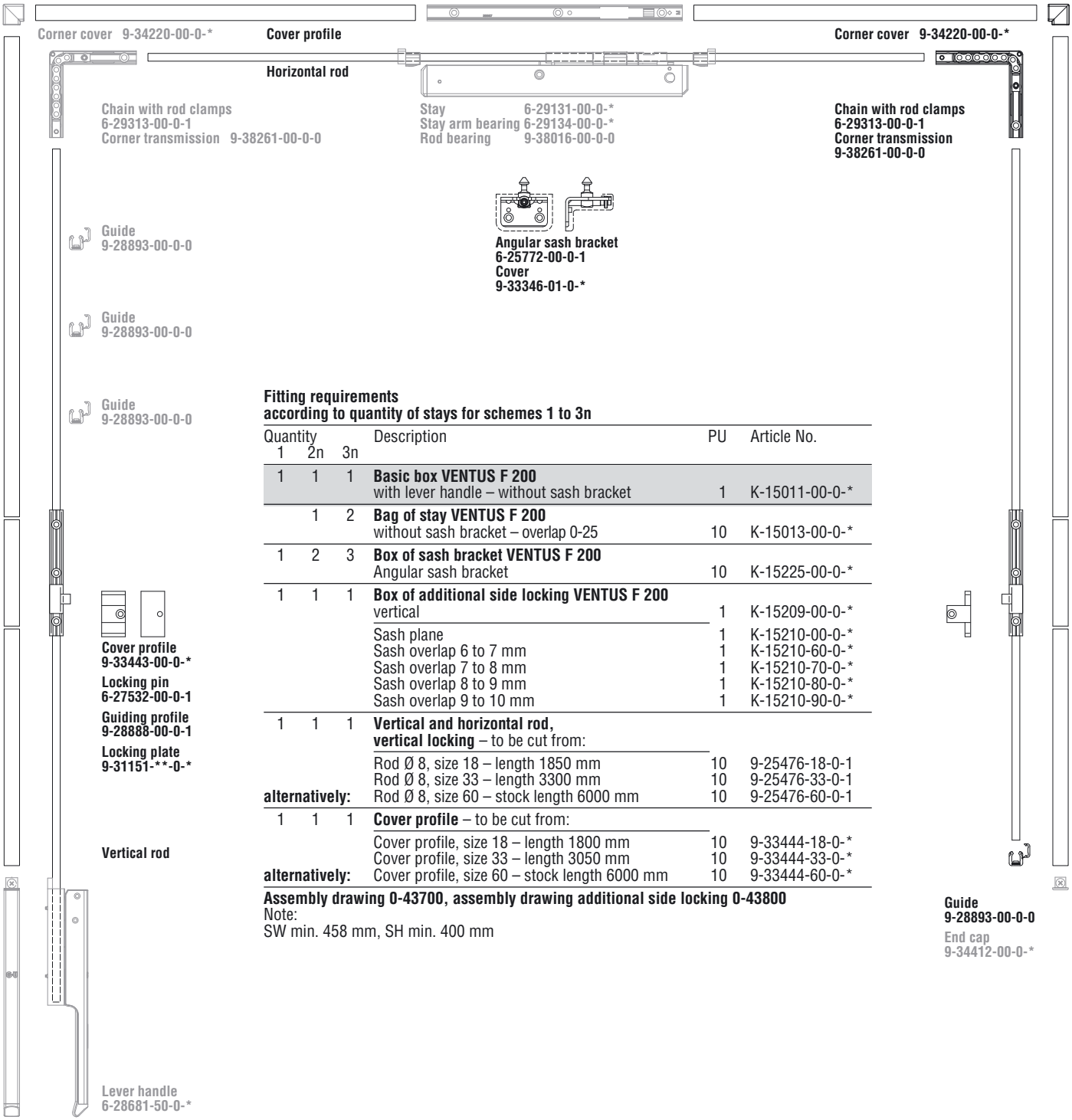

Fitting requirements
according to quantity of stays for schemes 1 to 3n

Quantity 1	2n	3n	Description	PU	Article No.
1	1	1	**Basic box VENTUS F 200** with lever handle – without sash bracket	1	K-15011-00-0-*
	1	2	**Bag of stay VENTUS F 200** without sash bracket – overlap 0-25	10	K-15013-00-0-*
1	2	3	**Box of sash bracket VENTUS F 200** Angular sash bracket	10	K-15225-00-0-*
1	1	1	**Box of additional side locking VENTUS F 200** vertical	1	K-15209-00-0-*
			Sash plane	1	K-15210-00-0-*
			Sash overlap 6 to 7 mm	1	K-15210-60-0-*
			Sash overlap 7 to 8 mm	1	K-15210-70-0-*
			Sash overlap 8 to 9 mm	1	K-15210-80-0-*
			Sash overlap 9 to 10 mm	1	K-15210-90-0-*
1	1	1	**Vertical and horizontal rod,** **vertical locking** – to be cut from:		
			Rod Ø 8, size 18 – length 1850 mm	10	9-25476-18-0-1
			Rod Ø 8, size 33 – length 3300 mm	10	9-25476-33-0-1
		alternatively:	Rod Ø 8, size 60 – stock length 6000 mm	10	9-25476-60-0-1
1	1	1	**Cover profile** – to be cut from:		
			Cover profile, size 18 – length 1800 mm	10	9-33444-18-0-*
			Cover profile, size 33 – length 3050 mm	10	9-33444-33-0-*
		alternatively:	Cover profile, size 60 – stock length 6000 mm	10	9-33444-60-0-*

Assembly drawing 0-43700, assembly drawing additional side locking 0-43800
Note:
SW min. 458 mm, SH min. 400 mm

Arch head and segmental arch head windows according to scheme 1
Standard version with flexible transmission

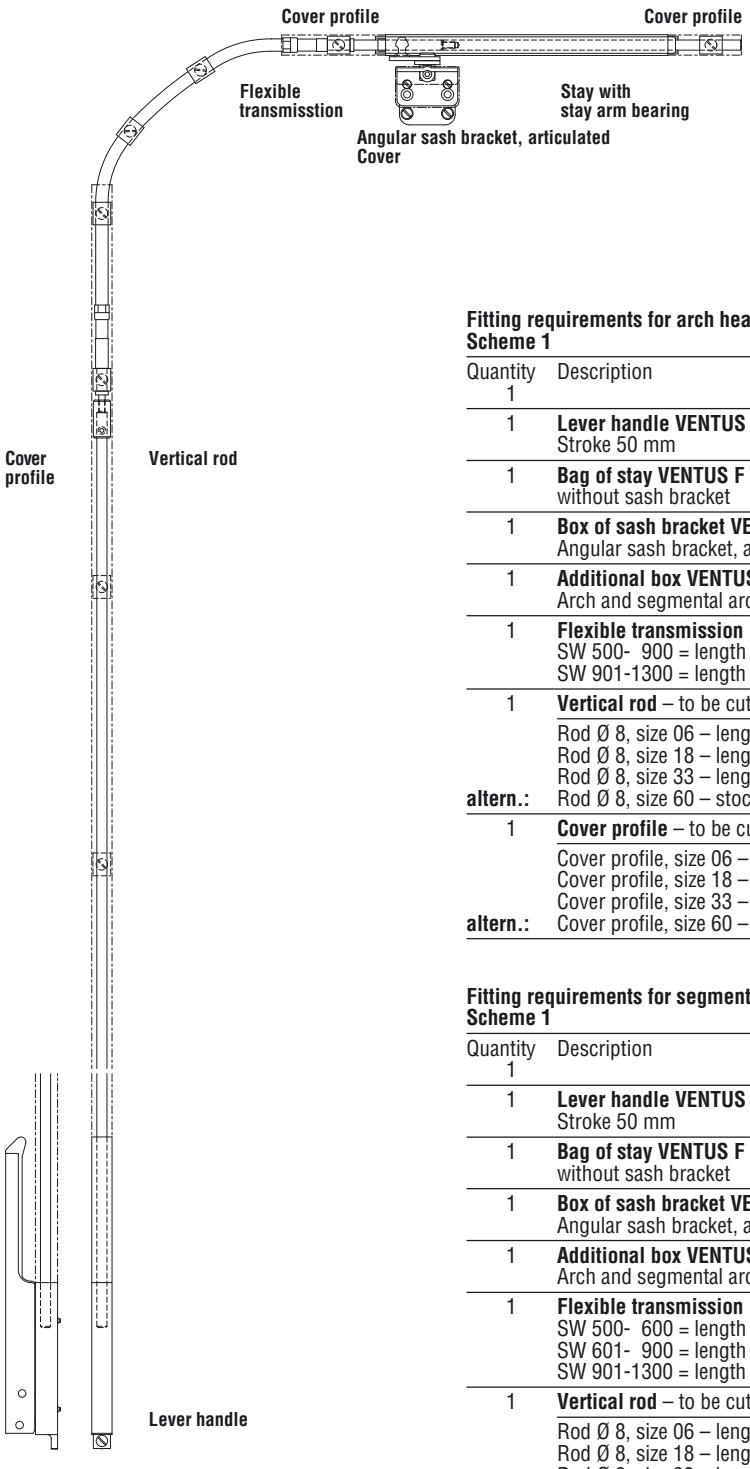

Fitting requirements for arch head windows
Scheme 1

Quantity	Description	PU	Article No.
1			
1	**Lever handle VENTUS F 200** Stroke 50 mm	1	6-28681-50-0-*
1	**Bag of stay VENTUS F 200, short** without sash bracket	1	K-15483-00-0-*
1	**Box of sash bracket VENTUS F 200** Angular sash bracket, articulated – overlap 0-25	1	K-15507-00-0-*
1	**Additional box VENTUS F 200** Arch and segmental arch head windows	1	K-15484-00-0-*
1	**Flexible transmission**		
	SW 500- 900 = length 700 mm	1	6-29495-07-0-*
	SW 901-1300 = length 1000 mm	1	6-29495-10-0-*
1	**Vertical rod** – to be cut from:		
	Rod Ø 8, size 06 – length 600 mm	10	9-25476-06-0-1
	Rod Ø 8, size 18 – length 1850 mm	10	9-25476-18-0-1
	Rod Ø 8, size 33 – length 3300 mm	10	9-25476-33-0-1
altern.:	Rod Ø 8, size 60 – stock length 6000 mm	10	9-25476-60-0-1
1	**Cover profile** – to be cut from:		
	Cover profile, size 06 – length 800 mm	10	9-33444-06-0-*
	Cover profile, size 18 – length 1800 mm	10	9-33444-18-0-*
	Cover profile, size 33 – length 3050 mm	10	9-33444-33-0-*
altern.:	Cover profile, size 60 – stock length 6000 mm	10	9-33444-60-0-*

Fitting requirements for segmental arch head windows
Scheme 1

Quantity	Description	PU	Article No.
1			
1	**Lever handle VENTUS F 200** Stroke 50 mm	1	6-28681-50-0-*
1	**Bag of stay VENTUS F 200, short** without sash bracket	1	K-15483-00-0-*
1	**Box of sash bracket VENTUS F 200** Angular sash bracket, articulated – overlap 0-25	1	K-15507-00-0-*
1	**Additional box VENTUS F 200** Arch and segmental arch head windows	1	K-15484-00-0-*
1	**Flexible transmission**		
	SW 500- 600 = length 400 mm	1	6-29495-04-0-*
	SW 601- 900 = length 700 mm	1	6-29495-07-0-*
	SW 901-1300 = length 1000 mm	1	6-29495-10-0-*
1	**Vertical rod** – to be cut from:		
	Rod Ø 8, size 06 – length 600 mm	10	9-25476-06-0-1
	Rod Ø 8, size 18 – length 1850 mm	10	9-25476-18-0-1
	Rod Ø 8, size 33 – length 3300 mm	10	9-25476-33-0-1
altern.:	Rod Ø 8, size 60 – stock length 6000 mm	10	9-25476-60-0-1
1	**Cover profile** – to be cut from:		
	Cover profile, size 06 – length 800 mm	10	9-33444-06-0-*
	Cover profile, size 18 – length 1800 mm	10	9-33444-18-0-*
	Cover profile, size 33 – length 3050 mm	10	9-33444-33-0-*
altern.:	Cover profile, size 60 – stock length 6000 mm	10	9-33444-60-0-*

Assembly drawing 0-43951

Arch and segmental arch head windows according to scheme 2n
Standard version with flexible transmission

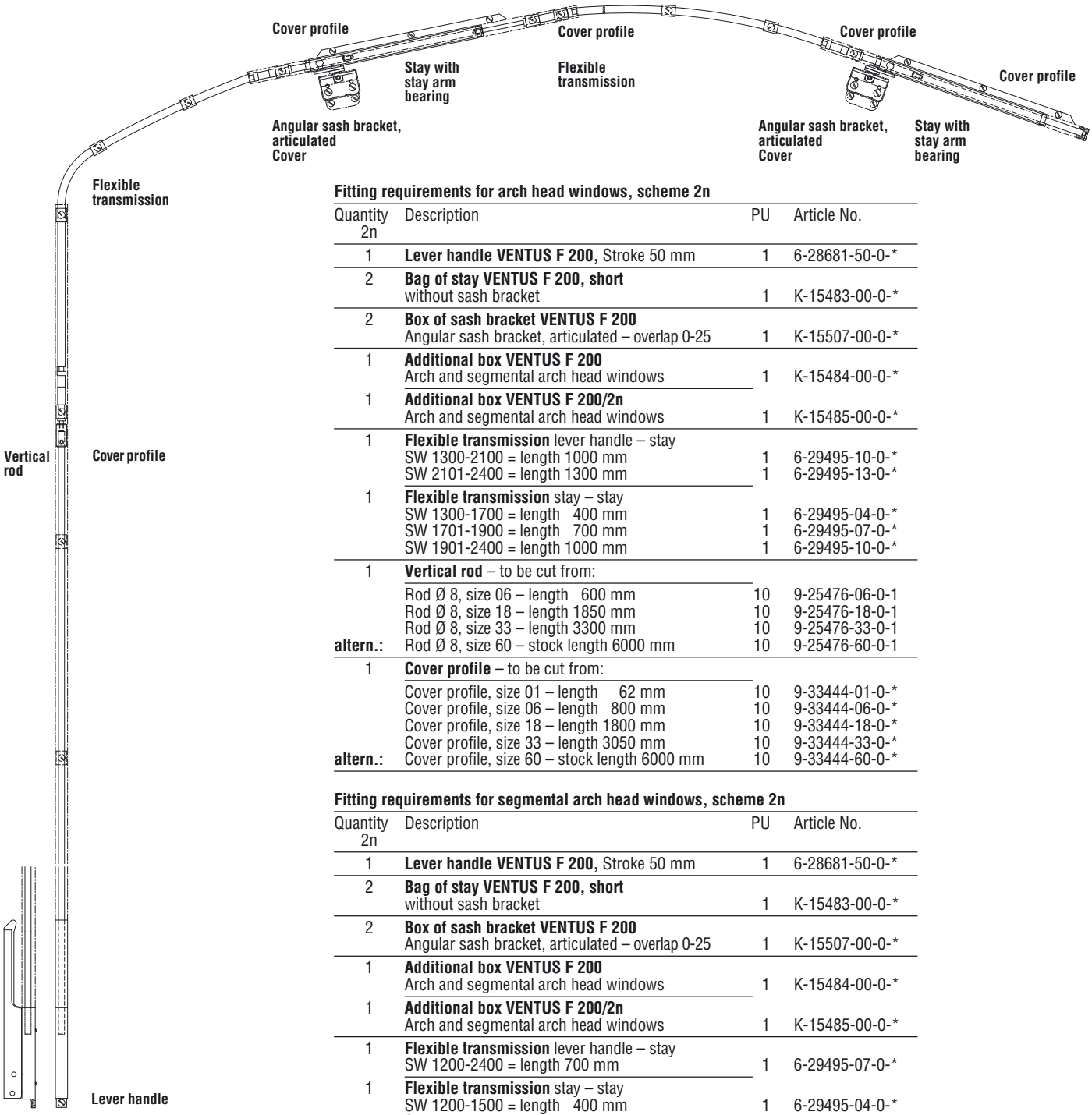

Fitting requirements for arch head windows, scheme 2n

Quantity 2n	Description	PU	Article No.
1	**Lever handle VENTUS F 200,** Stroke 50 mm	1	6-28681-50-0-*
2	**Bag of stay VENTUS F 200, short** without sash bracket	1	K-15483-00-0-*
2	**Box of sash bracket VENTUS F 200** Angular sash bracket, articulated – overlap 0-25	1	K-15507-00-0-*
1	**Additional box VENTUS F 200** Arch and segmental arch head windows	1	K-15484-00-0-*
1	**Additional box VENTUS F 200/2n** Arch and segmental arch head windows	1	K-15485-00-0-*
1	**Flexible transmission** lever handle – stay		
	SW 1300-2100 = length 1000 mm	1	6-29495-10-0-*
	SW 2101-2400 = length 1300 mm	1	6-29495-13-0-*
1	**Flexible transmission** stay – stay		
	SW 1300-1700 = length 400 mm	1	6-29495-04-0-*
	SW 1701-1900 = length 700 mm	1	6-29495-07-0-*
	SW 1901-2400 = length 1000 mm	1	6-29495-10-0-*
1	**Vertical rod** – to be cut from:		
	Rod Ø 8, size 06 – length 600 mm	10	9-25476-06-0-1
	Rod Ø 8, size 18 – length 1850 mm	10	9-25476-18-0-1
	Rod Ø 8, size 33 – length 3300 mm	10	9-25476-33-0-1
altern.:	Rod Ø 8, size 60 – stock length 6000 mm	10	9-25476-60-0-1
1	**Cover profile** – to be cut from:		
	Cover profile, size 01 – length 62 mm	10	9-33444-01-0-*
	Cover profile, size 06 – length 800 mm	10	9-33444-06-0-*
	Cover profile, size 18 – length 1800 mm	10	9-33444-18-0-*
	Cover profile, size 33 – length 3050 mm	10	9-33444-33-0-*
altern.:	Cover profile, size 60 – stock length 6000 mm	10	9-33444-60-0-*

Fitting requirements for segmental arch head windows, scheme 2n

Quantity 2n	Description	PU	Article No.
1	**Lever handle VENTUS F 200,** Stroke 50 mm	1	6-28681-50-0-*
2	**Bag of stay VENTUS F 200, short** without sash bracket	1	K-15483-00-0-*
2	**Box of sash bracket VENTUS F 200** Angular sash bracket, articulated – overlap 0-25	1	K-15507-00-0-*
1	**Additional box VENTUS F 200** Arch and segmental arch head windows	1	K-15484-00-0-*
1	**Additional box VENTUS F 200/2n** Arch and segmental arch head windows	1	K-15485-00-0-*
1	**Flexible transmission** lever handle – stay		
	SW 1200-2400 = length 700 mm	1	6-29495-07-0-*
1	**Flexible transmission** stay – stay		
	SW 1200-1500 = length 400 mm	1	6-29495-04-0-*
	SW 1501-1800 = length 700 mm	1	6-29495-07-0-*
	SW 1801-2100 = length 1000 mm	1	6-29495-10-0-*
	SW 2101-2400 = length 1300 mm	1	6-29495-13-0-*
1	**Vertical rod** – to be cut from:		
	Rod Ø 8, size 06 – length 600 mm	10	9-25476-06-0-1
	Rod Ø 8, size 18 – length 1850 mm	10	9-25476-18-0-1
	Rod Ø 8, size 33 – length 3300 mm	10	9-25476-33-0-1
altern.:	Rod Ø 8, size 60 – stock length 6000 mm	10	9-25476-60-0-1
1	**Cover profile** – to be cut from:		
	Cover profile, size 01 – length 62 mm	10	9-33444-01-0-*
	Cover profile, size 06 – length 800 mm	10	9-33444-06-0-*
	Cover profile, size 18 – length 1800 mm	10	9-33444-18-0-*
	Cover profile, size 33 – length 3050 mm	10	9-33444-33-0-*
altern.:	Cover profile, size 60 – stock length 6000 mm	10	9-33444-60-0-*

Assembly drawing 0-43952

Standard version
Oblique angle head windows

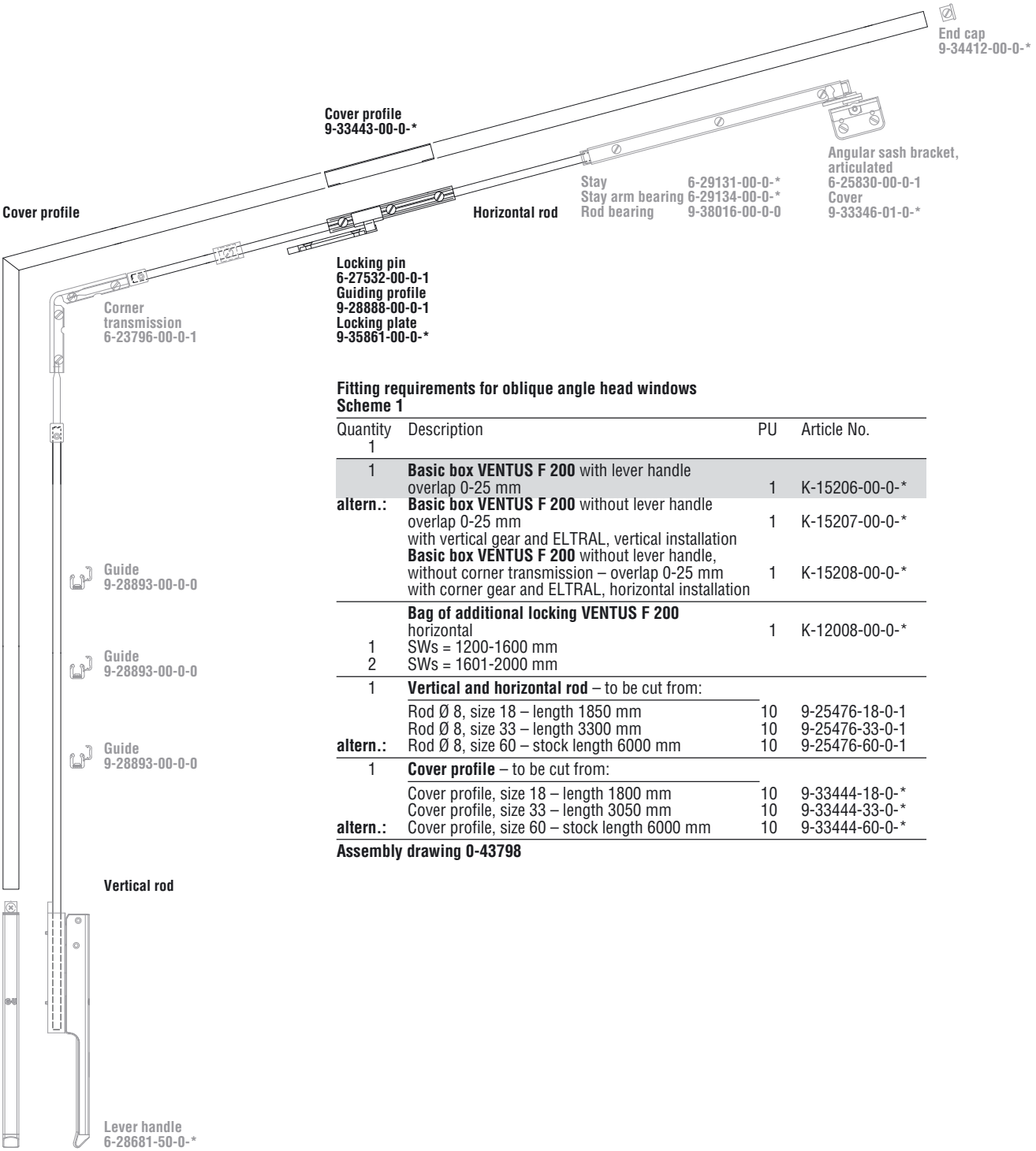

Fitting requirements for oblique angle head windows
Scheme 1

Quantity	Description	PU	Article No.
1			
1	**Basic box VENTUS F 200** with lever handle overlap 0-25 mm	1	K-15206-00-0-*
altern.:	**Basic box VENTUS F 200** without lever handle overlap 0-25 mm with vertical gear and ELTRAL, vertical installation	1	K-15207-00-0-*
	Basic box VENTUS F 200 without lever handle, without corner transmission – overlap 0-25 mm with corner gear and ELTRAL, horizontal installation	1	K-15208-00-0-*
	Bag of additional locking VENTUS F 200 horizontal	1	K-12008-00-0-*
1	SWs = 1200-1600 mm		
2	SWs = 1601-2000 mm		
1	**Vertical and horizontal rod** – to be cut from:		
	Rod Ø 8, size 18 – length 1850 mm	10	9-25476-18-0-1
	Rod Ø 8, size 33 – length 3300 mm	10	9-25476-33-0-1
altern.:	Rod Ø 8, size 60 – stock length 6000 mm	10	9-25476-60-0-1
1	**Cover profile** – to be cut from:		
	Cover profile, size 18 – length 1800 mm	10	9-33444-18-0-*
	Cover profile, size 33 – length 3050 mm	10	9-33444-33-0-*
altern.:	Cover profile, size 60 – stock length 6000 mm	10	9-33444-60-0-*

Assembly drawing 0-43798

Flexible transmission, special versions

Flexible transmission

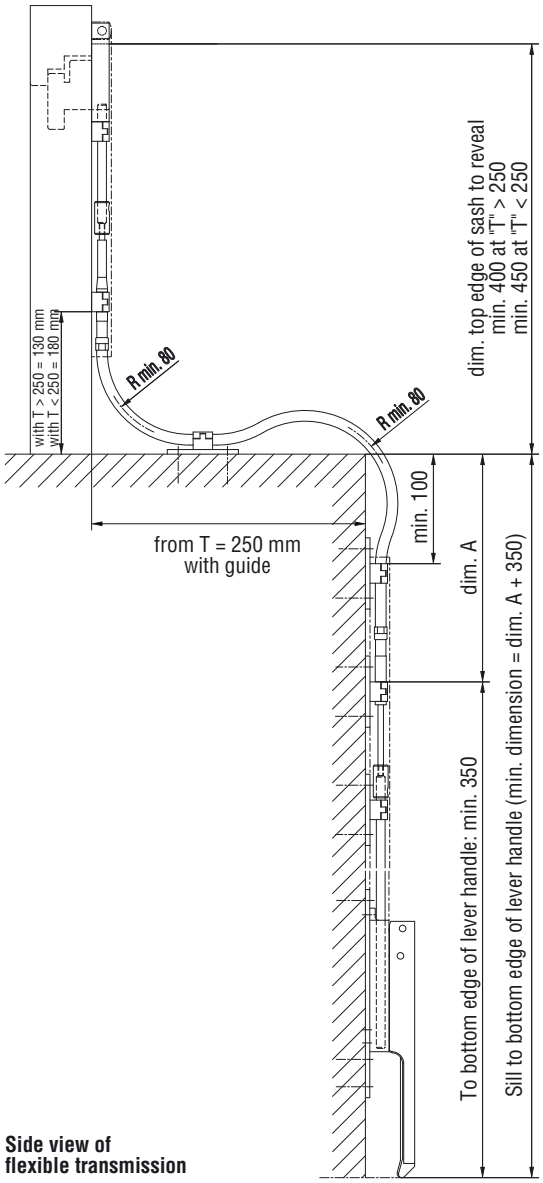

Side view of flexible transmission

Fitting requirements for flexible transmission

Quantity	Description	PU	Article No.
1	**Additional box of flexible transmission**	1	K-14312-00-0-*
1	**Flexible transmission**		
	Size 02, length 200 mm	1	6-29495-02-0-*
	Size 04, length 400 mm	1	6-29495-04-0-*
	Size 07, length 700 mm	1	6-29495-07-0-*
	Size 10, length 1000 mm	1	6-29495-10-0-*
	Size 13, length 1300 mm	1	6-29495-13-0-*
	Size 20, length 2000 mm	1	6-29495-20-0-*

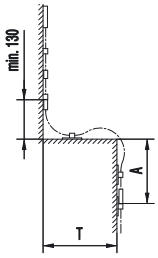

dim. t	dim. A	
730	170	length 1000
700	200	
670	230	
640	260	
610	290	
580	320	
550	350	
520	380	
490	410	
460	440	
430	170	length 700
400	200	
370	230	
340	260	
310	290	
280	320	
250	350	

dim. T = > 250 mm with guide

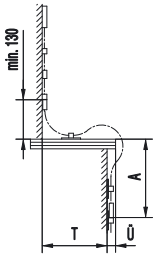

dim. t	dim. A	
670	230	length 1000
640	260	
610	290	
580	320	
550	350	
520	380	
490	410	
460	440	
430	170	length 700
400	200	
370	230	
340	260	
310	290	
280	320	
250	350	

dim. Ü max. 40 mm

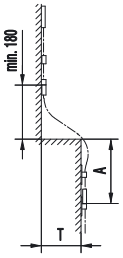

dim. t	dim. A	
240	360	length 700
210	380	
180	400	
150	425	
120	450	
90	170	length 400
60	190	
30	200	
0	250	

dim. T = < 250 mm without guide

Minimum dimensions depending on depth of reveal

Special versions

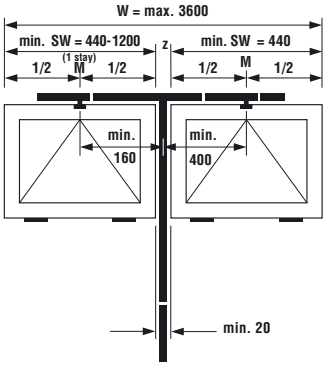

Fan-light opener VENTUS F 200
Common centre operation of 2 side by side sashes, type 2n with T angle (optional part)

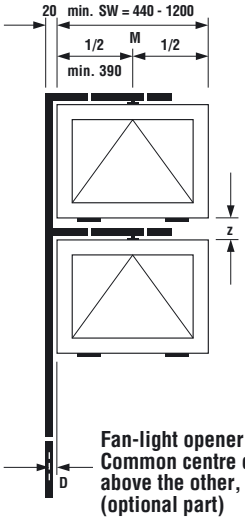

Fan-light opener VENTUS F 200
Common centre operation of 2 sashes one above the other, type 2ü with T angle (optional part)

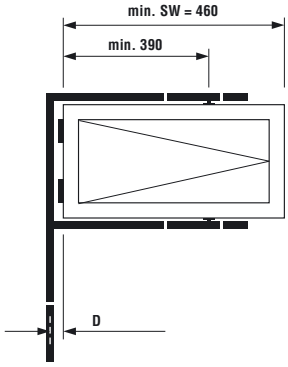

Fan-light opener VENTUS F 200
Side hung sash with T angle (optional part)

Standard version, minimum dimensions

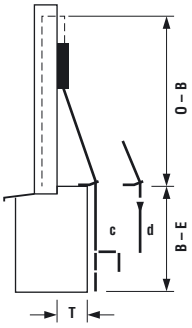

O-B min. Vert.	Cor.	T
310	200	30
345	200	60
380	200	90
415	210	120
450	245	150
485	280	180
525	315	210
560	350	240
595	390	270
630	425	300

B-E min. Vert.	Cor.	Type
475	475	c
515	515	d

O-E min. Vert.	Cor.	Type
715	505	a
765	555	b

Vertical and corner gears
Types a, b, c and d

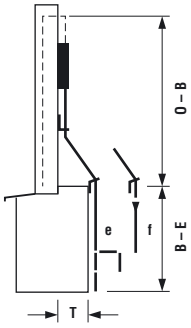

O-B min.	T
515	30
565	60
615	90
670	120
720	150
775	180
825	210
875	240
930	270
985	300

B-E min.	Type
475	e
515	f

Vertical gear
Types e and f

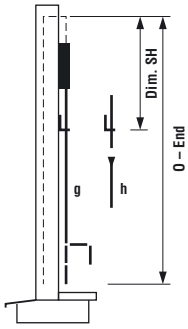

dim. SH min.
400

O-End min.	Type
800	g
850	h

Vertical gear
Types g and h

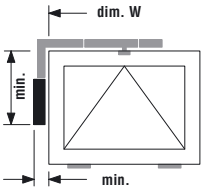

	ELTRAL S [1]
Space requirement	39
Installation height	292
dim. W min.	400
dim. W max.	3600

[1] ELTRAL S 230 L, S 230 E

ELTRAL, vertical installation on the side

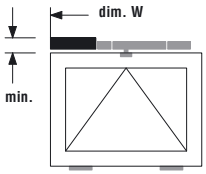

	ELTRAL S [1]	300
Space requirement	39	57
dim. W min.	620	650
dim. W max.	3600	3600 [2]

[1] ELTRAL S 230 L, S 230 E
[2] to 6000 mm on request

ELTRAL horizontal installation at the top

Rods cut to measure, minimum dimensions

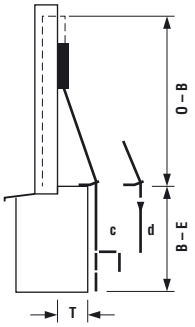

O-B min. Vert.	Cor.	T
310	200	30
345	200	60
380	200	90
415	210	120
450	245	150
485	280	180
525	315	210
560	350	240
595	390	270
630	425	300

B-E min. Vert.	Cor.	Type
475	475	c
515	515	d

O-E min. Vert.	Cor.	Type
715	505	a
765	555	b

Vertical and corner gears
Types a, b, c and d

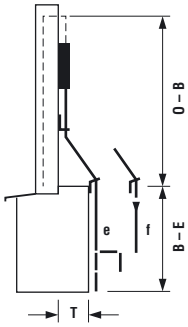

O-B min.	T
515	30
565	60
615	90
670	120
720	150
775	180
825	210
875	240
930	270
985	300

B-E min.	Type
475	e
515	f

Vertical gear
Types e and f

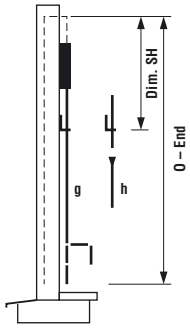

dim. SH min.
400

O-End min.	Type
800	g
850	h

Vertical gear
Types g and h

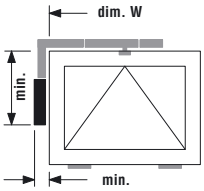

	ELTRAL S [1]
Space requirement	39
Installation height	292
dim. W min.	400
dim. W max.	3600

[1] ELTRAL S 230 L, S 230 E

ELTRAL, vertical installation on the side

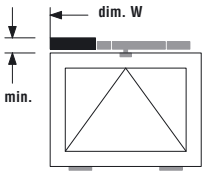

	ELTRAL S [1]	300
Space requirement	39	57
dim. W min.	620	650
dim. W max.	3600	3600 [2]

[1] ELTRAL S 230 L, S 230 E
[2] to 6000 mm on request

ELTRAL horizontal installation at the top

Fan-light opener VENTUS F 200
Lever handle

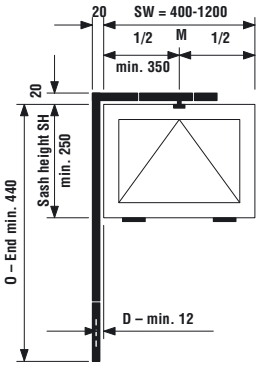

Scheme 1
Lever handle

Rod length depending on total sash width and dim. O-End

O-End	Length of vertical rod	Total sash width dim. SW or W 700	800	1000	1200
		Length of horizontal rod 365	415	515	615
1000	767	1132	1182	1282	1382
1100	867	1232	1282	1382	1482
1200	967	1332	1382	1482	1582
1300	1067	1432	1482	1582	1682
1400	1167	1532	1582	1682	1782
1500	1267	1632	1682	1782	1882
1600	1367	1732	1782	1882	1982
1700	1467	1832	1882	1982	2082
1800	1567	1932	1982	2082	2182
1900	1667	2032	2082	2182	2282
2000	1767	2132	2182	2282	2382

Rod and cover profile size 33 = grey, 60 = white

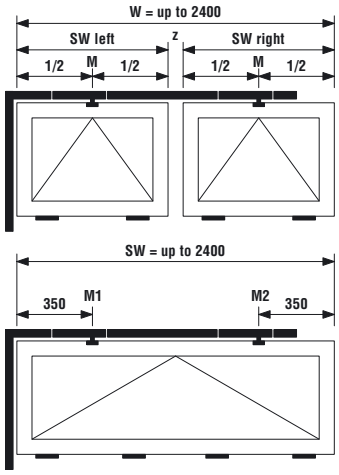

Scheme 2n

Rod length depending on total sash width and dim. O-End

O-End	Length of vertical rod	Total sash width dim. SW or W 1400	1600	1800	2000	2200	2400
		Length of horizontal rod 1065	1265	1465	1665	1865	2065
1000	767	1832	2032	2232	2432	2632	2832
1100	867	1932	2132	2332	2532	2732	2932
1200	967	2032	2232	2432	2632	2832	3032
1300	1067	2132	2332	2532	2732	2932	3132
1400	1167	2232	2432	2632	2832	3032	3232
1500	1267	2332	2532	2732	2932	3132	3332
1600	1367	2432	2632	2832	3032	3232	3432
1700	1467	2532	2732	2932	3132	3332	3532
1800	1567	2632	2832	3032	3232	3432	3632
1900	1667	2732	2932	3132	3332	3532	3732
2000	1767	2832	3032	3232	3432	3632	3832

Rod and cover profile size 33 = grey, 60 = white

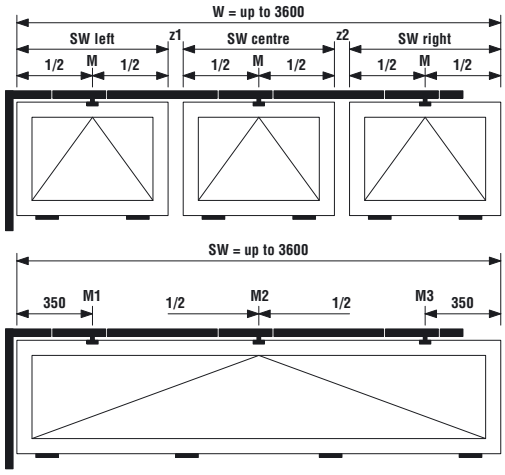

Scheme 3n

Rod length depending on total sash width and dim. O-End

O-End	Length of vertical rod	Total sash width dim. SW or W 2600	2800	3000	3200	3400	3600
		Length of horizontal rod 2265	2465	2665	2865	3065	3265
1000	767	3032	3232	3432	3632	3832	4032
1100	867	3132	3332	3532	3732	3932	4132
1200	967	3232	3432	3632	3832	4032	4232
1300	1067	3332	3532	3732	3932	4132	4332
1400	1167	3432	3632	3832	4032	4232	4432
1500	1267	3532	3732	3932	4132	4332	4532
1600	1367	3632	3832	4032	4232	4432	4632
1700	1467	3732	3932	4132	4332	4532	4732
1800	1567	3832	4032	4232	4432	4632	4832
1900	1667	3932	4132	4332	4532	4732	4932
2000	1767	4032	4232	4432	4632	4832	5032

Rod and cover profile size 33 = grey, 60 = white

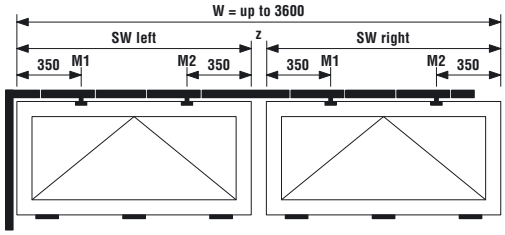

Scheme 4n

Rod length depending on total sash width and dim. O-End

O-End	Length of vertical rod	Total sash width dim. SW or W 2600	2800	3000	3200	3400	3600
		Length of horizontal rod 2265	2465	2665	2865	3065	3265
1000	767	3032	3232	3432	3632	3832	4032
1100	867	3132	3332	3532	3732	3932	4132
1200	967	3232	3432	3632	3832	4032	4232
1300	1067	3332	3532	3732	3932	4132	4332
1400	1167	3432	3632	3832	4032	4232	4432
1500	1267	3532	3732	3932	4132	4332	4532
1600	1367	3632	3832	4032	4232	4432	4632
1700	1467	3732	3932	4132	4332	4532	4732
1800	1567	3832	4032	4232	4432	4632	4832
1900	1667	3932	4132	4332	4532	4732	4932
2000	1767	4032	4232	4432	4632	4832	5032

Rod and cover profile size 33 = grey, 60 = white

Fan-light opener VENTUS F 200
Vertical and corner gears, ELTRAL – vertical and horizontal installation

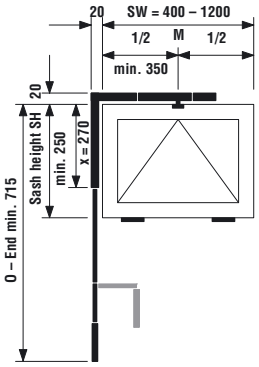

Scheme 1
Vertical gear

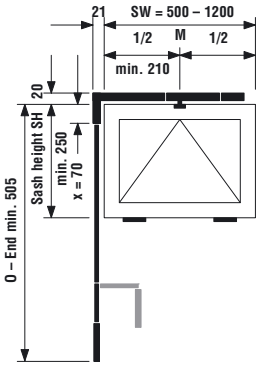

Scheme 1
Corner gear

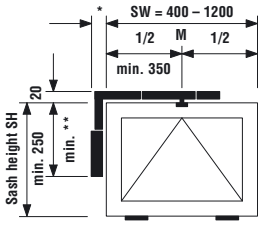

Scheme 1
ELTRAL vertical, min. dimensions

	ELTRAL S [1]
*	39
**	292
W max.	3600

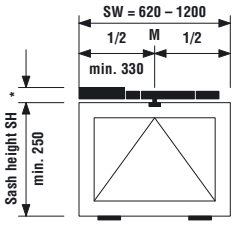

Scheme 1
ELTRAL horizontal, min. dimensions

	ELTRAL S [1]	300
*	39	57
W min.	620	650
W max.	3600	3600

Length of horizontal rod depending on total sash width

Drive	Total sash width dim. FB or B 700	800	1000	1200
Vertical gear	365	415	515	615
Corner gear	486	536	636	736

Length of horizontal rod depending on total sash width

Drive	Total sash width dim. SW or W 700	800	1000	1200
ELTRAL S vertical [1]	530	580	680	780
ELTRAL S horizontal [1]	372	422	522	622
ELTRAL 300 horizontal	327	377	477	577

[1] ELTRAL S 230 L, S 230 E

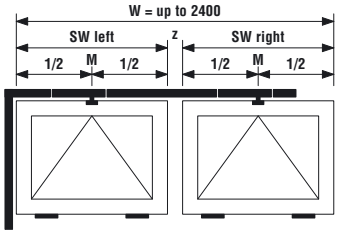

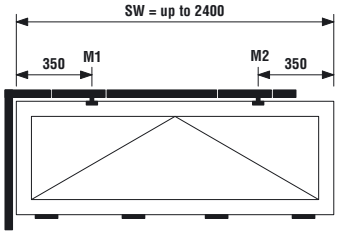

Scheme 2n

Length of horizontal rod depending on total sash width

Drive	Total sash width dim. SW or W 1400	1600	1800	2000	2200	2400
Vertical gear	1065	1265	1465	1665	1865	2065
Corner gear	1186	1386	1586	1786	1986	2186
ELTRAL S vertical [1]	1065	1265	1465	1665	1865	2065
ELTRAL S horizontal [1]	1072	1272	1472	1672	1872	2072
ELTRAL 300 horizontal	1027	1227	1427	1627	1827	2027

[1] ELTRAL S 230 L, S 230 E

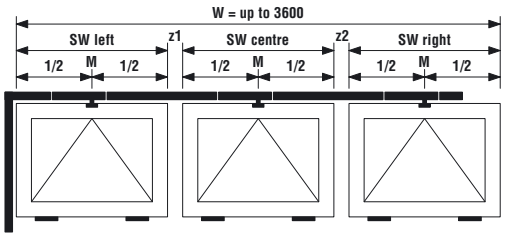

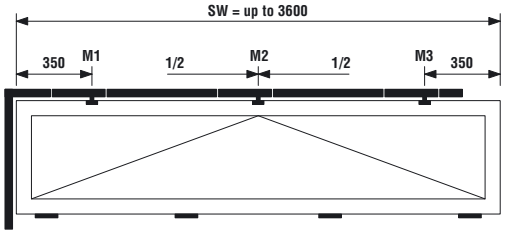

Scheme 3n

Length of horizontal rod depending on total sash width

Drive	Total sash width dim. SW or W 2600	2800	3000	3200	3400	3600
Vertical gear	2265	2465	2665	2865	3065	3265
Corner gear	2386	2586	2786	2986	3186	3386
ELTRAL S vertical [1]	2265	2465	2665	2865	3065	3265
ELTRAL S horizontal [1]	2272	2472	2672	2872	3072	3272
ELTRAL 300 horizontal	2227	2427	2627	2827	3027	3227

[1] ELTRAL S 230 L, S 230 E

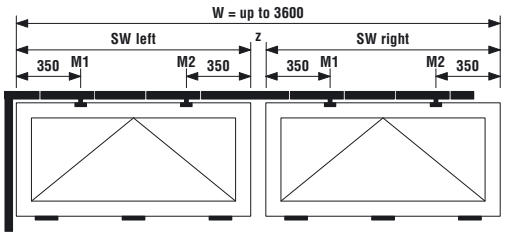

Scheme 4n

Length of horizontal rod depending on total sash width

Drive	Total sash width dim. SW or W 2600	2800	3000	3200	3400	3600
Vertical gear	2265	2465	2665	2865	3065	3265
Corner gear	2386	2586	2786	2986	3186	3386
ELTRAL S vertical [1]	2265	2465	2665	2865	3065	3265
ELTRAL S horizontal [1]	2272	2472	2672	2872	3072	3272
ELTRAL 300 horizontal	2227	2427	2627	2827	3027	3227

[1] ELTRAL S 230 L, S 230 E

Top hung outward opening sashes
Standard version – lever handle

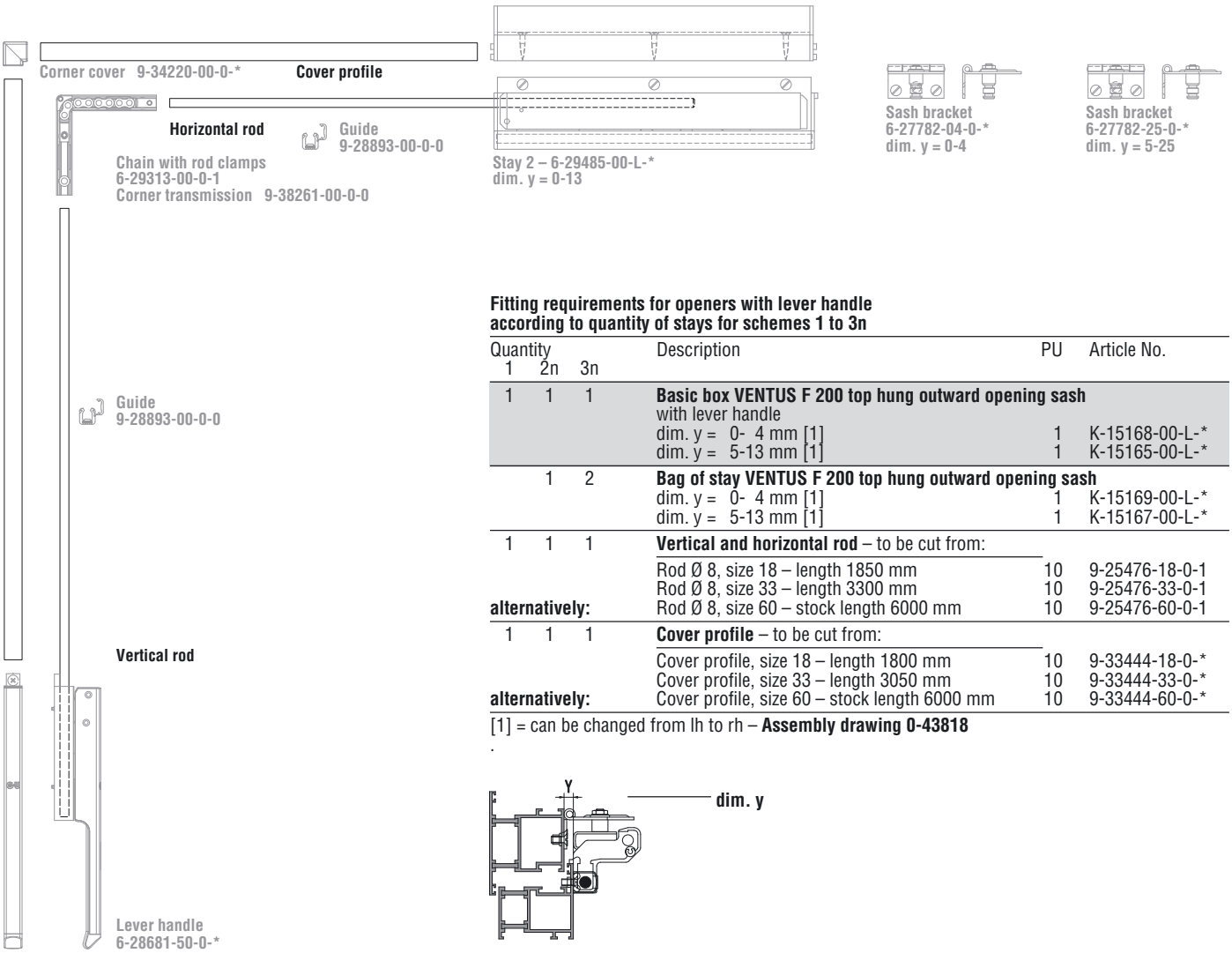

Fitting requirements for openers with lever handle according to quantity of stays for schemes 1 to 3n

Quantity 1	2n	3n	Description	PU	Article No.
1	1	1	**Basic box VENTUS F 200 top hung outward opening sash** with lever handle		
			dim. y = 0- 4 mm [1]	1	K-15168-00-L-*
			dim. y = 5-13 mm [1]	1	K-15165-00-L-*
	1	2	**Bag of stay VENTUS F 200 top hung outward opening sash**		
			dim. y = 0- 4 mm [1]	1	K-15169-00-L-*
			dim. y = 5-13 mm [1]	1	K-15167-00-L-*
1	1	1	**Vertical and horizontal rod** – to be cut from:		
			Rod Ø 8, size 18 – length 1850 mm	10	9-25476-18-0-1
			Rod Ø 8, size 33 – length 3300 mm	10	9-25476-33-0-1
alternatively:			Rod Ø 8, size 60 – stock length 6000 mm	10	9-25476-60-0-1
1	1	1	**Cover profile** – to be cut from:		
			Cover profile, size 18 – length 1800 mm	10	9-33444-18-0-*
			Cover profile, size 33 – length 3050 mm	10	9-33444-33-0-*
alternatively:			Cover profile, size 60 – stock length 6000 mm	10	9-33444-60-0-*

[1] = can be changed from lh to rh – **Assembly drawing 0-43818**

.

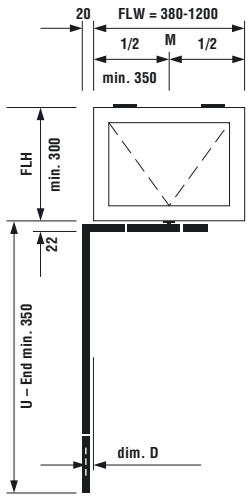

Scheme 1
Lever handle

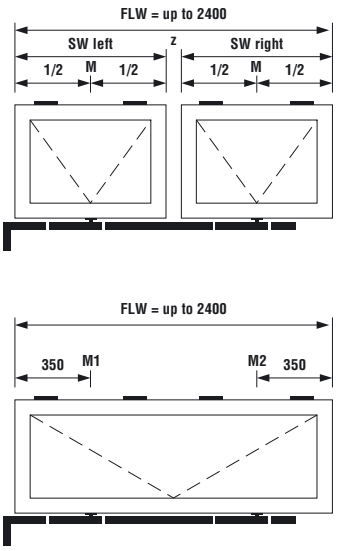

Scheme 2n

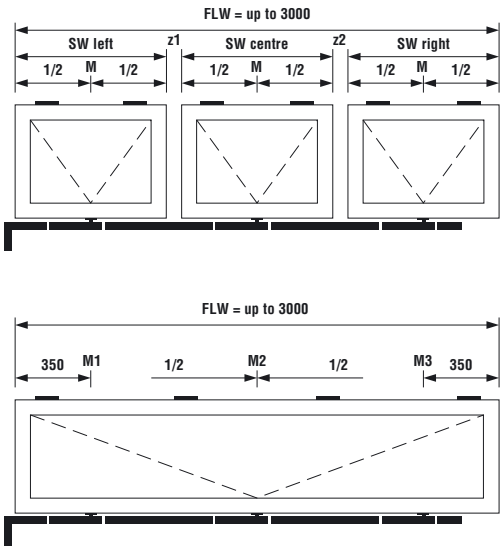

Scheme 3n

Top hung outward opening sashes
Standard version – vertical gear

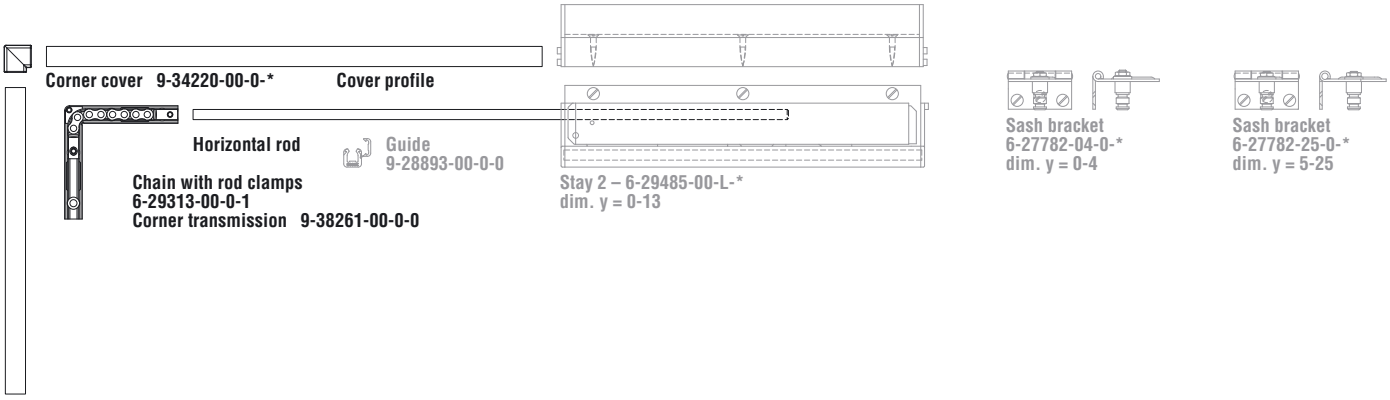

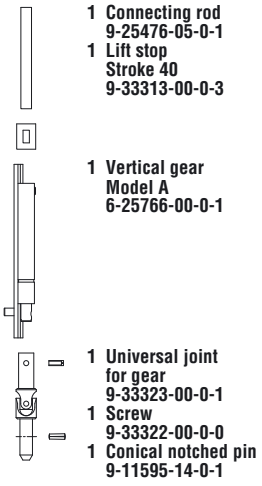

1 Connecting rod
9-25476-05-0-1
1 Lift stop
Stroke 40
9-33313-00-0-3

1 Vertical gear
Model A
6-25766-00-0-1

1 Universal joint
for gear
9-33323-00-0-1
1 Screw
9-33322-00-0-0
1 Conical notched pin
9-11595-14-0-1

Bag of vertical gear
K-13402-00-0-1

Fitting requirements for openers with vertical gear according to quantity of stays for schemes 1 to 3n

Quantity 1	2n	3n	Description	PU	Article No.
1	2	3	**Bag of stay VENTUS F 200 top hung outward opening sash**		
			dim. y = 0- 4 mm [1]	1	K-15169-00-L-*
			dim. y = 5-13 mm [1]	1	K-15167-00-L-*
1	1	1	**Chain with rod clamps**	1	6-29313-00-0-1
1	1	1	**Corner transmission**	1	9-38261-00-0-0
1	1	1	**Corner cover**	100	9-34220-00-0-*
1	1	1	**Horizontal rod** – to be cut from:		
			Rod Ø 8, size 06 – length 600 mm	10	9-25476-06-0-1
			Rod Ø 8, size 18 – length 1850 mm	10	9-25476-18-0-1
			Rod Ø 8, size 33 – length 3300 mm	10	9-25476-33-0-1
		alternatively:	Rod Ø 8, size 60 – stock length 6000 mm	10	9-25476-60-0-1
1	1	1	**Cover profile** – to be cut from:		
			Cover profile, size 06 – length 800 mm	10	9-33444-06-0-*
			Cover profile, size 18 – length 1800 mm	10	9-33444-18-0-*
			Cover profile, size 33 – length 3050 mm	10	9-33444-33-0-*
		alternatively:	Cover profile, size 60 – stock length 6000 mm	10	9-33444-60-0-*
1	1	1	**Bag of vertical gear**, model A	1	K-13402-00-0-1

[1] = can be changed from lh to rh

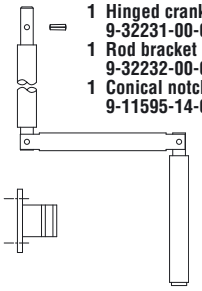

1 Hinged crank
9-32231-00-0-*
1 Rod bracket
9-32232-00-0-*
1 Conical notched pin
9-11595-14-0-1

Bag of hinged crank
K-13162-00-0-*

Fitting requirements for articulated crank rod and accessories according to types a to h for vertical and corner gears

Type a	b	c	d	e	f	g	h	Description	PU	Article No.
1	1	1	1	1	1	1	1	**Crank rod** (not illustrated) – to be cut from: aluminium tube, stock length 5000 mm	1	9-32230-50-0-*
1	1	1	1	1	1	1	1	**Bag of hinged crank**	1	K-13162-00-0-*
		1	1	2	2	1	1	**Bag of universal joint** for crank rod	1	K-13164-00-0-1
	1		1		1		1	**Bag of coupling horn**	1	K-13165-00-0-1

Assembly drawing 0-43818

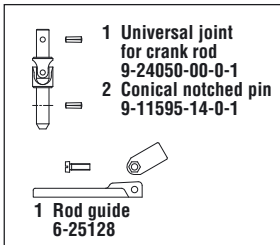

1 Universal joint
for crank rod
9-24050-00-0-1
2 Conical notched pin
9-11595-14-0-1

1 Rod guide
6-25128

Bag of universal joint
for crank rod
K-13164-00-0-1

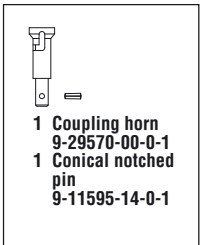

1 Coupling horn
9-29570-00-0-1
1 Conical notched
pin
9-11595-14-0-1

Bag of coupling
horn
K-13165-00-0-1

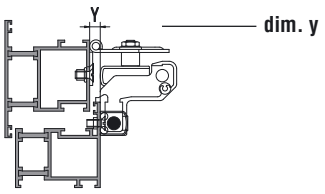

Top hung outward opening sashes
Standard version – corner gear

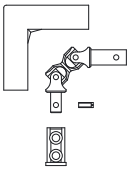

1 Cover
9-33337-00-0-*
1 Double universal joint
9-33333-00-0-1
1 Bearing
9-33335-00-0-0
1 Screw
9-33322-00-0-0

Bag of corner gear
K-13403-00-0-*

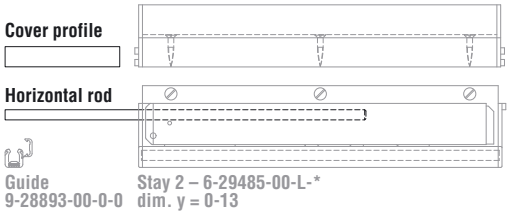

Sash bracket
6-27782-04-0-*
dim. y = 0-4

Sash bracket
6-27782-25-0-*
dim. y = 5-25

1 Vertical gear Model A
6-25766-00-0-1

1 Lift stop Stroke 40
9-33313-00-0-3
1 Connecting rod
9-25476-05-0-1

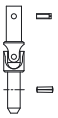

1 Universal joint for gear
9-33323-00-0-1
1 Screw
9-33322-00-0-0
1 Conical notched pin
9-11595-14-0-1

Bag of vertical gear
K-13402-00-0-1

Fitting requirements for openers with corner gear according to quantity of stays for schemes 1 to 3n

Quantity 1	2n	3n	Description	PU	Article No.
1	2	3	**Bag of stay VENTUS F 200 top hung outward opening sash**		
			dim. y = 0- 4 mm [1]	1	K-15169-00-L-*
			dim. y = 5-13 mm [1]	1	K-15167-00-L-*
1	1	1	**Horizontal rod** – to be cut from:		
			Rod Ø 8, size 06 – length 600 mm	10	9-25476-06-0-1
			Rod Ø 8, size 18 – length 1850 mm	10	9-25476-18-0-1
			Rod Ø 8, size 33 – length 3300 mm	10	9-25476-33-0-1
		alternatively:	Rod Ø 8, size 60 – stock length 6000 mm	10	9-25476-60-0-1
1	1	1	**Cover profile** – to be cut from:		
			Cover profile, size 06 – length 800 mm	10	9-33444-06-0-*
			Cover profile, size 18 – length 1800 mm	10	9-33444-18-0-*
			Cover profile, size 33 – length 3050 mm	10	9-33444-33-0-*
		alternatively:	Cover profile, size 60 – stock length 6000 mm	10	9-33444-60-0-*
1	1	1	**Bag of vertical gear**, model A	1	K-13402-00-0-1
1	1	1	**Bag of additional parts for corner gear**, model A	1	K-13403-00-0-*

[1] = can be changed from lh to rh

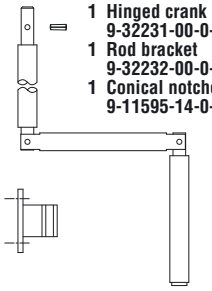

1 Hinged crank
9-32231-00-0-*
1 Rod bracket
9-32232-00-0-*
1 Conical notched pin
9-11595-14-0-1

Bag of hinged crank
K-13162-00-0-*

Fitting requirements for articulated crank rod and accessories according to types a to h for articulated crank rod

Type a	b	c	d	e	f	g	h	Description	PU	Article No.
1	1	1	1	1	1	1	1	**Crank rod** (not illustrated) – to be cut from: aluminium rod, stock length 5000 mm	1	9-32230-50-0-*
1	1	1	1	1	1	1	1	**Bag of hinged crank**	1	K-13162-00-0-*
		1	1	2	2	1	1	**Bag of universal joint** for crank rod	1	K-13164-00-0-1
	1		1		1		1	**Bag of coupling horn**	1	K-13165-00-0-1

Assembly drawing 0-43818

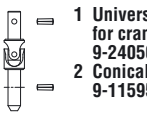

1 Universal joint for crank rod
9-24050-00-0-1
2 Conical notched pin
9-11595-14-0-1

1 Rod guide
6-25128

Bag of universal joint for crank rod
K-13164-00-0-1

1 Coupling horn
9-29570-00-0-1
1 Conical notched pin
9-11595-14-0-1

Bag of coupling horn
K-13165-00-0-1

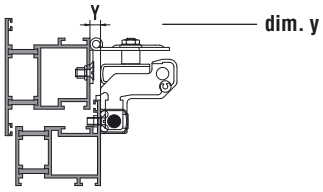

Top hung outward opening sashes
Standard version – ELTRAL, vertical installation on the side

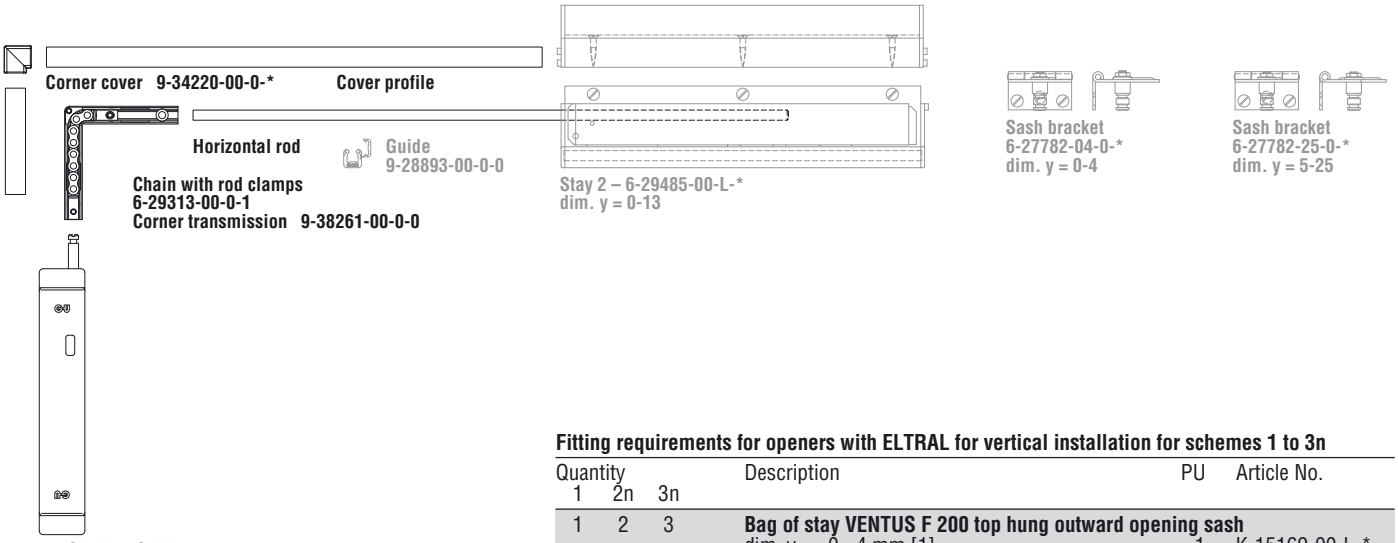

Fitting requirements for openers with ELTRAL for vertical installation for schemes 1 to 3n

Quantity 1	2n	3n		Description	PU	Article No.
1	2	3		**Bag of stay VENTUS F 200 top hung outward opening sash**		
				dim. y = 0- 4 mm [1]	1	K-15169-00-L-*
				dim. y = 5-13 mm [1]	1	K-15167-00-L-*
1	1	1		**Chain with rod clamps**	1	6-29313-00-0-1
1	1	1		**Corner transmission**	1	9-38261-00-0-0
1	1	1		**Corner cover**	100	9-34220-00-0-*
1	1	1		**Horizontal rod** – to be cut from:		
				Rod Ø 8, size 06 – length 600 mm	10	9-25476-06-0-1
				Rod Ø 8, size 18 – length 1850 mm	10	9-25476-18-0-1
				Rod Ø 8, size 33 – length 3300 mm	10	9-25476-33-0-1
			alternatively:	Rod Ø 8, size 60 – stock length 6000 mm	10	9-25476-60-0-1
1	1	1		**Cover profile** – to be cut from:		
				Cover profile, size 06 – length 800 mm	10	9-33444-06-0-*
				Cover profile, size 18 – length 1800 mm	10	9-33444-18-0-*
				Cover profile, size 33 – length 3050 mm	10	9-33444-33-0-*
			alternatively:	Cover profile, size 60 – stock length 6000 mm	10	9-33444-60-0-*
1	1	1	1	**Electric drive ELTRAL S 230 L**	1	6-31730-00-0-*
			alternatively:	**Electric drive ELTRAL S 230 E**	1	6-31732-00-0-*
1	1	1		**Connecting rod**, Ø 8 mm, W = 400-3000	1	9-34764-00-0-1

[1] = can be changed from lh to rh – **Assembly drawing 0-43831**

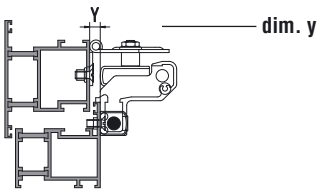

Top hung outward opening sashes
Standard version – ELTRAL, horizontal installation at the top

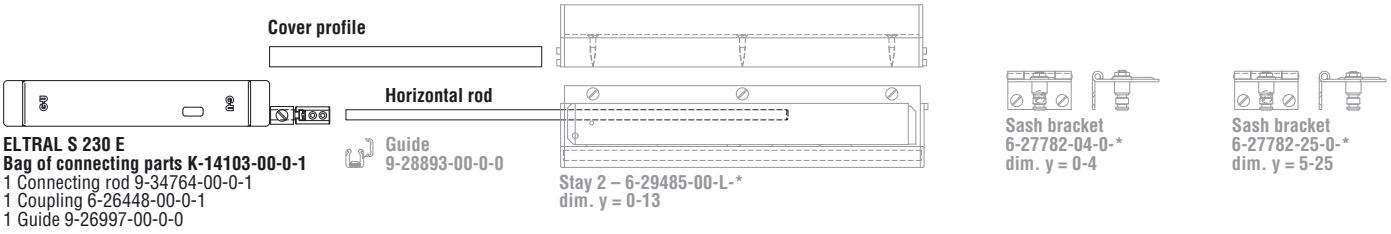

Fitting requirements for openers with ELTRAL for horizontal installation for schemes 1 to 3n

Quantity 1	2n	3n		Description	PU	Article No.
1	2	3		**Bag of stay VENTUS F 200 top hung outward opening sash**		
				dim. y = 0- 4 mm [1]	1	K-15169-00-L-*
				dim. y = 5-13 mm [1]	1	K-15167-00-L-*
1	1	1		**Horizontal rod** – to be cut from:		
				Rod Ø 8, size 06 – length 600 mm	10	9-25476-06-0-1
				Rod Ø 8, size 18 – length 1850 mm	10	9-25476-18-0-1
				Rod Ø 8, size 33 – length 3300 mm	10	9-25476-33-0-1
			alternatively:	Rod Ø 8, size 60 – stock length 6000 mm	10	9-25476-60-0-1
1	1	1		**Cover profile** – to be cut from:		
				Cover profile, size 06 – length 800 mm	10	9-33444-06-0-*
				Cover profile, size 18 – length 1800 mm	10	9-33444-18-0-*
				Cover profile, size 33 – length 3050 mm	10	9-33444-33-0-*
			alternatively:	Cover profile, size 60 – stock length 6000 mm	10	9-33444-60-0-*
1	1	1	1	**Electric drive ELTRAL S 230 L**	1	6-31730-00-0-*
			alternatively:	**Electric drive ELTRAL S 230 E**	1	6-31732-00-0-*
1	1	1	1	**Bag of connecting parts**, W = 620-3000	1	K-14103-00-0-1

[1] = can be changed from lh to rh – **Assembly drawing 0-43831**

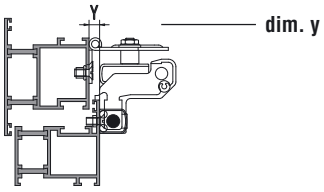

Standard version
Lever handle and transmission

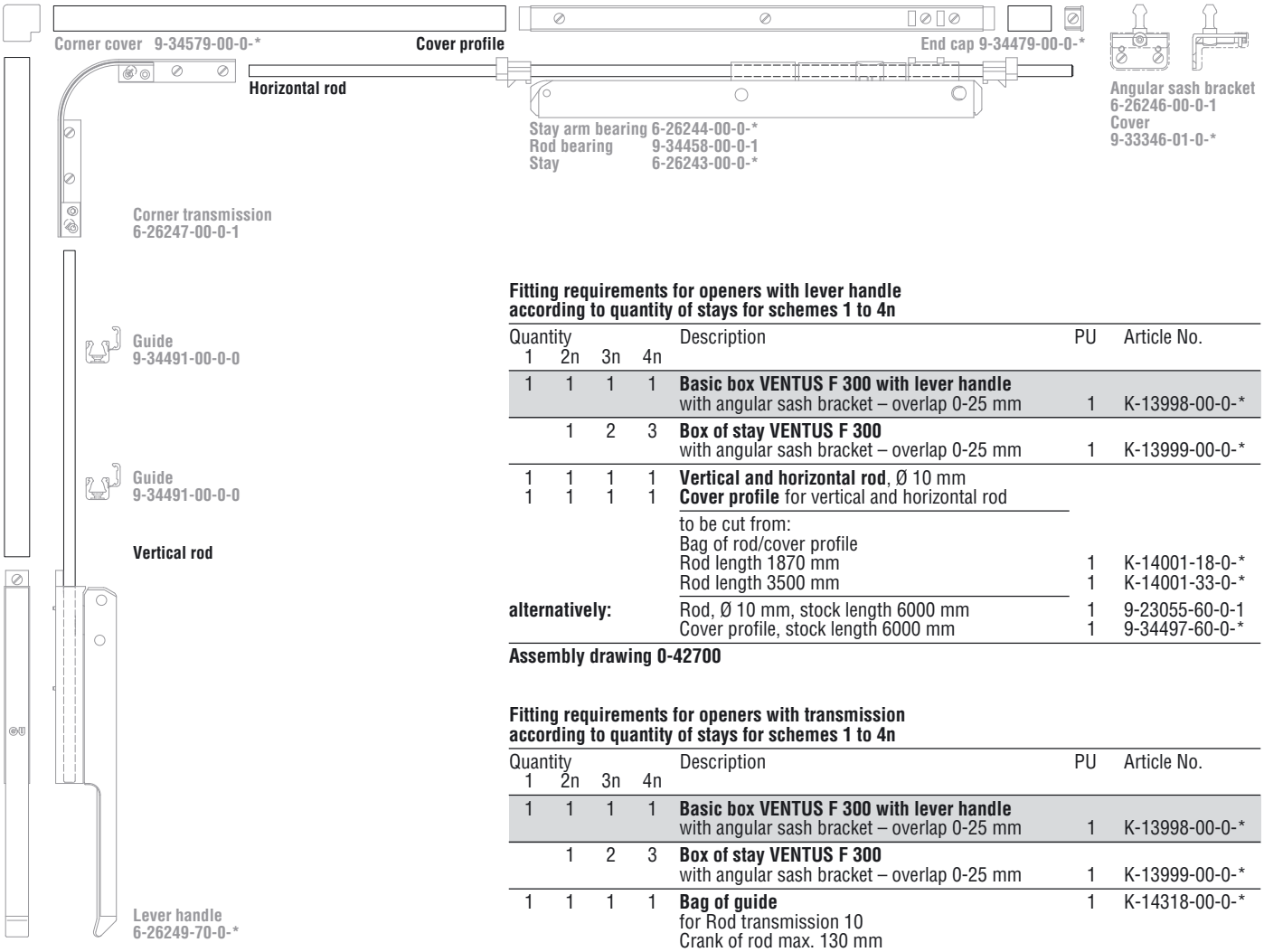

Fitting requirements for openers with lever handle according to quantity of stays for schemes 1 to 4n

Quantity 1	2n	3n	4n	Description	PU	Article No.
1	1	1	1	**Basic box VENTUS F 300 with lever handle** with angular sash bracket – overlap 0-25 mm	1	K-13998-00-0-*
	1	2	3	**Box of stay VENTUS F 300** with angular sash bracket – overlap 0-25 mm	1	K-13999-00-0-*
1	1	1	1	**Vertical and horizontal rod**, Ø 10 mm		
1	1	1	1	**Cover profile** for vertical and horizontal rod		
				to be cut from:		
				Bag of rod/cover profile		
				Rod length 1870 mm	1	K-14001-18-0-*
				Rod length 3500 mm	1	K-14001-33-0-*
alternatively:				Rod, Ø 10 mm, stock length 6000 mm	1	9-23055-60-0-1
				Cover profile, stock length 6000 mm	1	9-34497-60-0-*

Assembly drawing 0-42700

Fitting requirements for openers with transmission according to quantity of stays for schemes 1 to 4n

Quantity 1	2n	3n	4n	Description	PU	Article No.
1	1	1	1	**Basic box VENTUS F 300 with lever handle** with angular sash bracket – overlap 0-25 mm	1	K-13998-00-0-*
	1	2	3	**Box of stay VENTUS F 300** with angular sash bracket – overlap 0-25 mm	1	K-13999-00-0-*
1	1	1	1	**Bag of guide** for Rod transmission 10 Crank of rod max. 130 mm	1	K-14318-00-0-*
1	1	1	1	**Bag of additional** parts for rod transmission 10	1	K-14319-00-0-*
1	1	1	1	**Vertical** rod, Ø 10 mm		
				to be cut from:		
				Rod, Ø 10 mm, length 6000 mm	1	9-23055-60-0-1
1	1	1	1	**Horizontal rod**, Ø 10 mm		
1	1	1	1	**Cover profile** for horizontal rod		
				to be cut from		
				Bag of rod/cover profile		
				Rod length 1870 mm	1	K-14001-18-0-*
				Rod length 3500 mm	1	K-14001-33-0-*
alternatively:				Rod, Ø 10 mm, stock length 6000 mm	1	9-23055-60-0-1
				Cover profile, stock length 6000 mm	1	9-34497-60-0-*

Assembly drawing 0-42700

Fixing plate 9-33788-00-0-* **Guide 9-34491-00-0-0**

Bag of guide K-14318-00-0-*

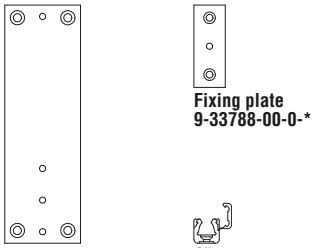

Fixing plate 9-33788-00-0-*

Fixing plate 9-35346-00-0-* **Guide 9-34491-00-0-0**

Bag of additional parts K-14319-00-0-*

Standard version
Vertical gear

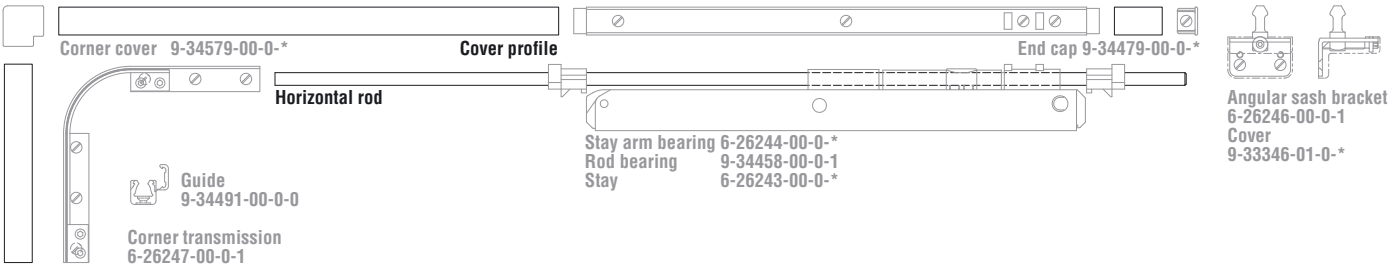

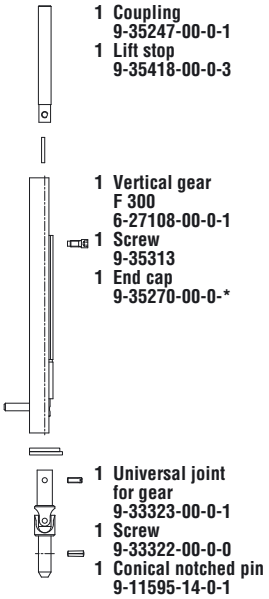

Bag of vertical gear
K-14219-00-0-*

Fitting requirements for openers with vertical gear according to quantity of stays for schemes 1 to 4n

Quantity 1	2n	3n	4n	Description	PU	Article No.
1	1	1	1	**Basic box VENTUS F 300** without lever handle with angular sash bracket – overlap 0-25 mm	1	K-14320-00-0-*
	1	2	3	**Bag of stay VENTUS F 300** with angular sash bracket – overlap 0-25 mm	1	K-13999-00-0-*
1	1	1	1	**Horizontal rod**, Ø 10 mm		
1	1	1	1	**Cover profile** für horizontal rod		
				To be cut from: Bag of rod/Cover profile		
				length 600 mm	1	K-14001-06-0-*
				length 1870 mm	1	K-14001-18-0-*
				length 3500 mm	1	K-14001-33-0-*
alternatively:				Rod, Ø 10 mm, stock length 6000 mm	1	9-23055-60-0-1
				Cover profile, stock length 6000 mm	1	9-34497-60-0-*
1	1	1	1	**Bag of vertical gear F 300**	1	K-14219-00-0-*

Assembly drawing 0-42700

Fitting requirements for articulated crank rod and accessories according to types a to h for vertical and corner gears

Types a	b	c	d	e	f	g	h	Description	PU	Article No.
1	1	1	1	1	1	1	1	**Crank rod** – to be cut from: aluminium tube, stock length 5000 mm	1	9-32230-50-0-*
1	1	1	1	1	1	1	1	**Bag of hinged crank**	1	K-13162-00-0-*
		1	1	2	2	1	1	**Bag of universal joint** for crank rod	1	K-13164-00-0-1
	1		1		1		1	**Bag of coupling horn**	1	K-13165-00-0-1

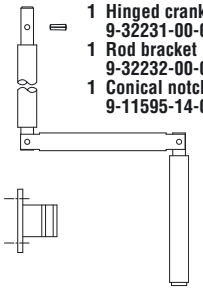

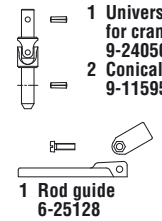

Bag of universal joint for crank rod
K-13164-00-0-1

Bag of coupling horn
K-13165-00-0-1

Standard version
Corner gear

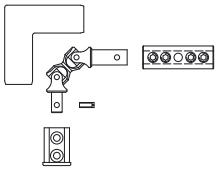

1 Cover
9-35357-00-0-*
1 Double universal joint
9-33333-00-0-1
1 Sleeve
6-26813-00-0-1
1 Bearing
9-35333-00-0-*
1 Screw
9-33322-00-0-0

Bag of corner gear K-14282-00-0-*

Guide
9-34491-00-0-0

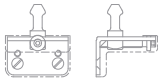

Angular sash bracket
6-26246-00-0-1
Cover
9-33346-01-0-*

1 Vertical gear F 300
6-27108-00-0-1
1 Screw
9-35313
1 End cap
9-35270-00-0-*

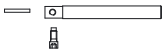

1 Lift stop
9-35418-00-0-3
1 Coupling
9-35247-00-0-1

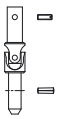

1 Universal joint for gear
9-33323-00-0-1
1 Screw
9-33322-00-0-0
1 Conical notched pin
9-11595-14-0-1

Bag of vertical gear K-14219-00-0-*

Fitting requirements for openers with corner gear according to quantity of stays for schemes 1 to 4n

Stück 1	2n	3n	4n	Bezeichnung	VE	Bestell-Nr.
1	2	3	4	**Bag of stay VENTUS F 300** with angular sash bracket – overlap 0-25 mm	1	K-13999-00-0-*
1	1	1	1	**End cap**	1	9-34479-00-0-*
1	1	1	1	**Horizontal rod**, Ø 10 mm		
1	1	1	1	**Cover profile** für horizontal rod		
				To be cut from: Bag of rod/Cover profile		
				length 600 mm	1	K-14001-06-0-*
				length 1870 mm	1	K-14001-18-0-*
				length 3500 mm	1	K-14001-33-0-*
alternatively:				Rod, Ø 10 mm, stock length 6000 mm	1	9-23055-60-0-1
				Cover profile, stock length 6000 mm	1	9-34497-60-0-*
1	1	1	1	**Bag of vertical gear F 300**	1	K-14219-00-0-*
1	1	1	1	**Bag of corner gear**	1	K-14282-00-0-*

Assembly drawing 0-42700

Fitting requirements for articulated crank rod and accessories according to types a to h for vertical and corner gears

Types a	b	c	d	e	f	g	h	Description	PU	Article No.
1	1	1	1	1	1	1	1	**Crank rod** – to be cut from: aluminium tube, stock length 5000 mm	1	9-32230-50-0-*
1	1	1	1	1	1	1	1	**Bag of hinged crank**	1	K-13162-00-0-*
		1	1	2	2	1	1	**Bag of universal joint** for crank rod	1	K-13164-00-0-1
	1		1		1		1	**Bag of coupling horn**	1	K-13165-00-0-1

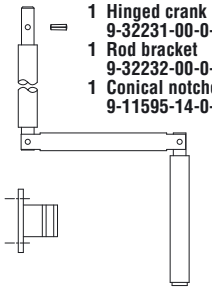

1 Hinged crank
9-32231-00-0-*
1 Rod bracket
9-32232-00-0-*
1 Conical notched pin
9-11595-14-0-1

Bag of hinged crank K-13162-00-0-*

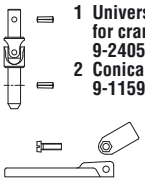

1 Universal joint for crank rod
9-24050-00-0-1
2 Conical notched pin
9-11595-14-0-1

1 Rod guide
6-25128

Bag of universal joint for crank rod K-13164-00-0-1

1 Coupling horn
9-29570-00-0-1
1 Conical notched pin
9-11595-14-0-1

Bag of coupling horn K-13165-00-0-1

Standard version
ELTRAL, vertical installation on the side

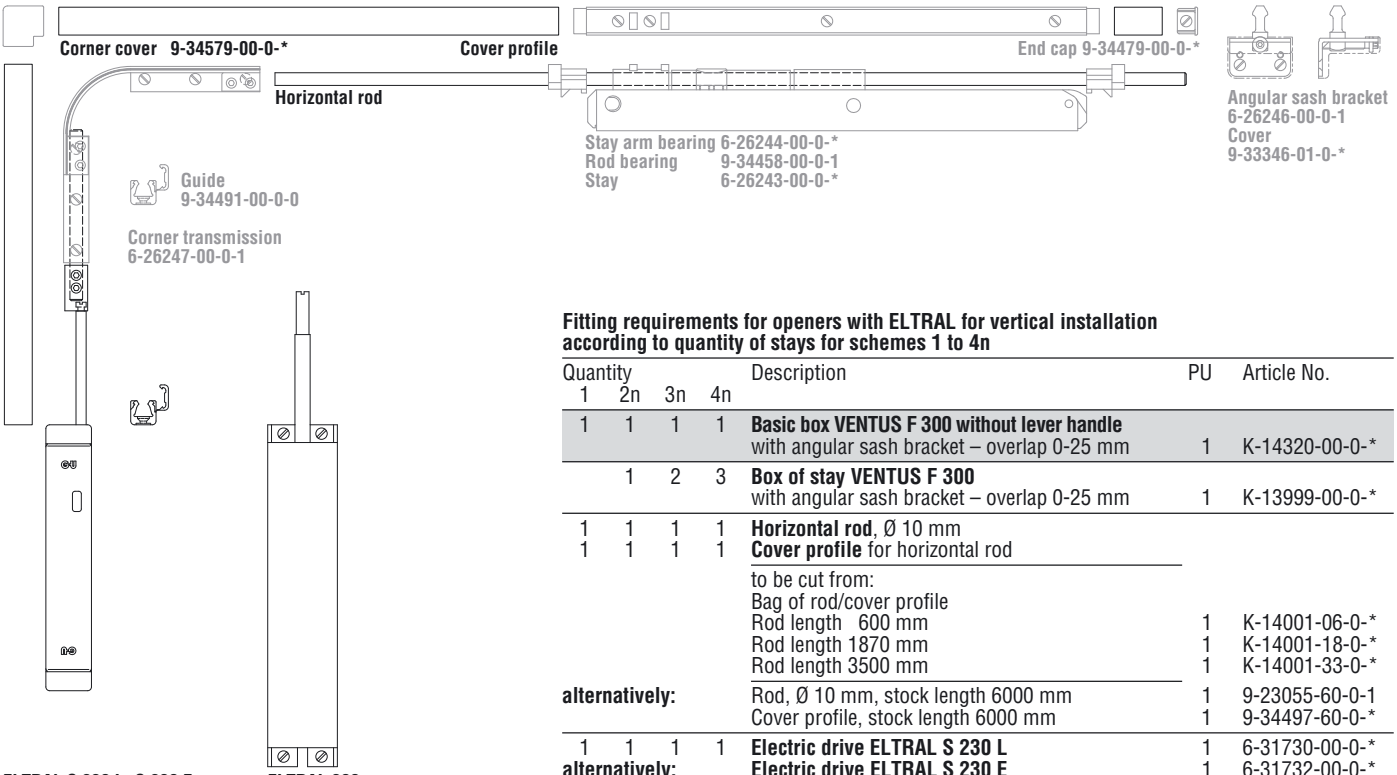

ELTRAL S 230 L, S 230 E
Bag of connecting parts
K-14203-00-0-1
1 Connecting rod
9-34764-00-0-1
1 Coupling
6-26815-00-0-1
1 Guide
9-34491-00-0-0

ELTRAL 300
1 Connecting rod
9-35331-00-0-1

Fitting requirements for openers with ELTRAL for vertical installation according to quantity of stays for schemes 1 to 4n

Quantity 1	2n	3n	4n	Description	PU	Article No.
1	1	1	1	**Basic box VENTUS F 300 without lever handle** with angular sash bracket – overlap 0-25 mm	1	K-14320-00-0-*
	1	2	3	**Box of stay VENTUS F 300** with angular sash bracket – overlap 0-25 mm	1	K-13999-00-0-*
1	1	1	1	**Horizontal rod**, Ø 10 mm		
1	1	1	1	**Cover profile** for horizontal rod		
				to be cut from:		
				Bag of rod/cover profile		
				Rod length 600 mm	1	K-14001-06-0-*
				Rod length 1870 mm	1	K-14001-18-0-*
				Rod length 3500 mm	1	K-14001-33-0-*
alternatively:				Rod, Ø 10 mm, stock length 6000 mm	1	9-23055-60-0-1
				Cover profile, stock length 6000 mm	1	9-34497-60-0-*
1	1	1	1	**Electric drive ELTRAL S 230 L**	1	6-31730-00-0-*
alternatively:				**Electric drive ELTRAL S 230 E**	1	6-31732-00-0-*
1	1	1	1	**Bag of connecting parts**, B = 620-3600	1	K-14203-00-0-1
1	1	1	1	**Vertical** rod, to be cut from rod Ø 10 mm		
alternatively:				**Electric drive ELTRAL 300 E1**	1	9-31020-01-0-*
alternatively:				**Connecting rod**, Ø 12 mm, B = 605–3600 mm	1	9-35331-00-0-1

Assembly drawing 0-42700
Assembly drawings ELTRAL S 230 0-42807, ELTRAL 300 0-42710

Standard version
ELTRAL, horizontal installation at the top

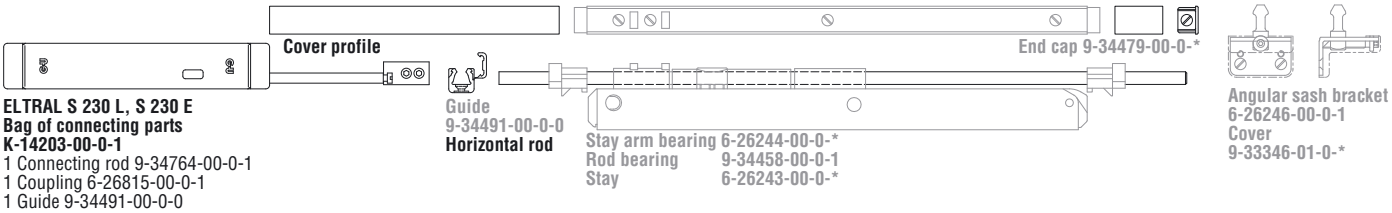

ELTRAL 300
Bag of connecting parts
K-14202-00-0-1
1 Connecting rod 9-31018-01-0-1
1 Coupling 6-26814-00-0-1
1 Guide 9-34491-00-0-0

Fitting requirements for openers with ELTRAL for horizontal installation according to quantity of stays for schemes 1 to 4n

Quantity 1	2n	3n	4n	Description	PU	Article No.
1	2	3	4	**Box of stay VENTUS F 300** with angular sash bracket – overlap 0-25 mm	1	K-13999-00-0-*
1	1	1	1	**End cap**	1	9-34479-00-0-*
1	1	1	1	**Horizontal rod**, Ø 10 mm		
1	1	1	1	**Cover profile** for horizontal rod		
				to be cut from Bag of rod/cover profile		
				Rod length 600 mm	1	K-14001-06-0-*
				Rod length 1870 mm	1	K-14001-18-0-*
				Rod length 3500 mm	1	K-14001-33-0-*
alternatively:				Rod, Ø 10 mm, stock length 6000 mm	1	9-23055-60-0-1
				Cover profile, stock length 6000 mm	1	9-34497-60-0-*
1	1	1	1	**Electric drive ELTRAL S 230 L**	1	6-31730-00-0-*
alternatively:				**Electric drive ELTRAL S 230 E**	1	6-31732-00-0-*
1	1	1	1	**Bag of connecting parts**, B = 825-3600	1	K-14203-00-0-1
alternatively:				**Electric drive ELTRAL 300 E1**	1	9-31020-01-0-*
alternatively:				**Bag of connecting parts 300**, B = 850-3600	1	K-14202-00-0-1

Assembly drawing 0-42700
Assembly drawings ELTRAL S 230 0-42807, ELTRAL 300 0-42710

Standard version
Lever handle additional side locking

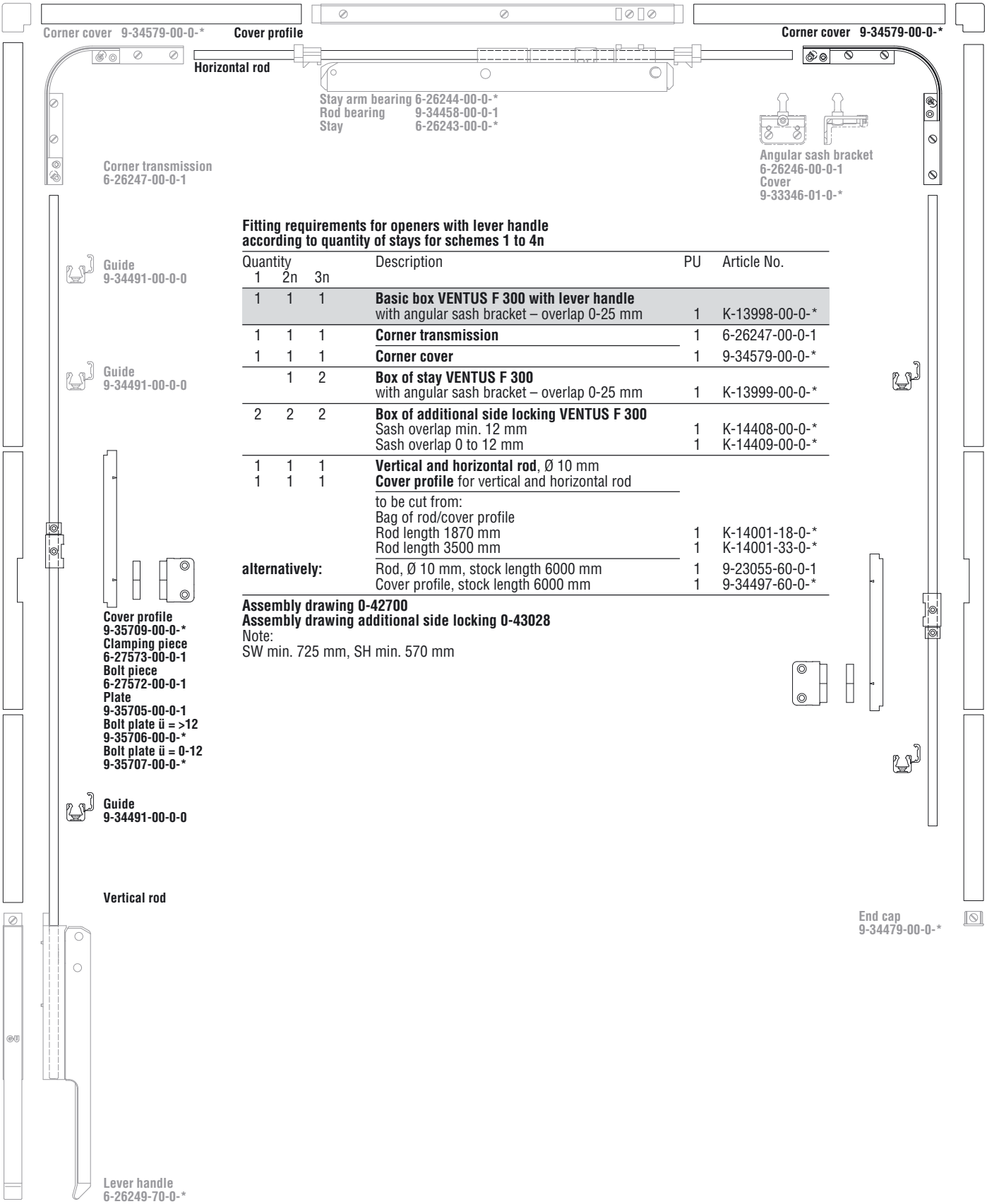

Fitting requirements for openers with lever handle according to quantity of stays for schemes 1 to 4n

Quantity 1	2n	3n	Description	PU	Article No.
1	1	1	**Basic box VENTUS F 300 with lever handle** with angular sash bracket – overlap 0-25 mm	1	K-13998-00-0-*
1	1	1	**Corner transmission**	1	6-26247-00-0-1
1	1	1	**Corner cover**	1	9-34579-00-0-*
	1	2	**Box of stay VENTUS F 300** with angular sash bracket – overlap 0-25 mm	1	K-13999-00-0-*
2	2	2	**Box of additional side locking VENTUS F 300**		
			Sash overlap min. 12 mm	1	K-14408-00-0-*
			Sash overlap 0 to 12 mm	1	K-14409-00-0-*
1	1	1	**Vertical and horizontal rod**, Ø 10 mm		
1	1	1	**Cover profile** for vertical and horizontal rod		
			to be cut from:		
			Bag of rod/cover profile		
			Rod length 1870 mm	1	K-14001-18-0-*
			Rod length 3500 mm	1	K-14001-33-0-*
alternatively:			Rod, Ø 10 mm, stock length 6000 mm	1	9-23055-60-0-1
			Cover profile, stock length 6000 mm	1	9-34497-60-0-*

Assembly drawing 0-42700
Assembly drawing additional side locking 0-43028
Note:
SW min. 725 mm, SH min. 570 mm

Standard version
Oblique angle head windows

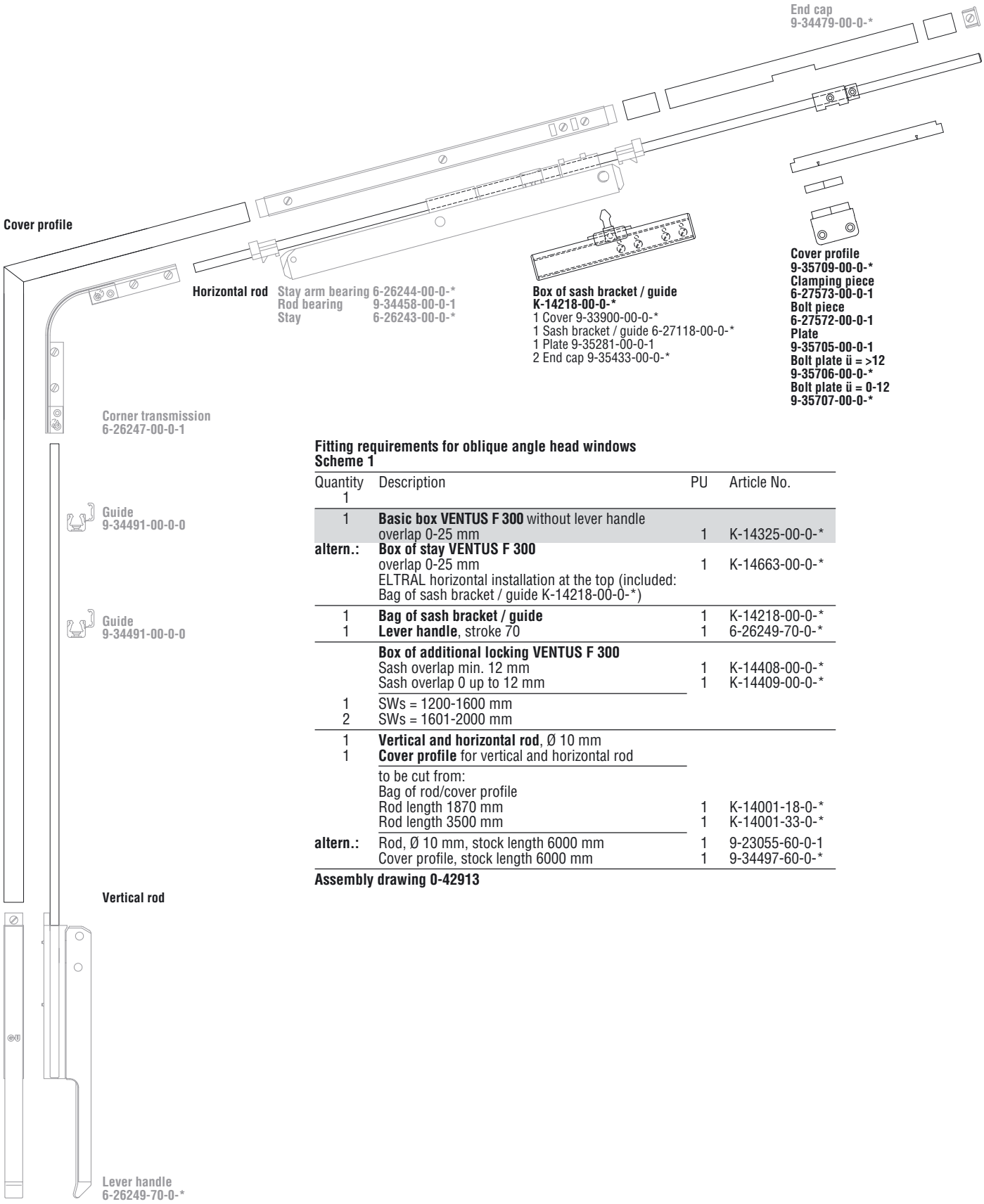

Fitting requirements for oblique angle head windows
Scheme 1

Quantity	Description	PU	Article No.
1			
1	**Basic box VENTUS F 300** without lever handle overlap 0-25 mm	1	K-14325-00-0-*
altern.:	**Box of stay VENTUS F 300** overlap 0-25 mm ELTRAL horizontal installation at the top (included: Bag of sash bracket / guide K-14218-00-0-*)	1	K-14663-00-0-*
1	**Bag of sash bracket / guide**	1	K-14218-00-0-*
1	**Lever handle**, stroke 70	1	6-26249-70-0-*
	Box of additional locking VENTUS F 300		
	Sash overlap min. 12 mm	1	K-14408-00-0-*
	Sash overlap 0 up to 12 mm	1	K-14409-00-0-*
1	SWs = 1200-1600 mm		
2	SWs = 1601-2000 mm		
1	**Vertical and horizontal rod**, Ø 10 mm		
1	**Cover profile** for vertical and horizontal rod		
	to be cut from: Bag of rod/cover profile		
	Rod length 1870 mm	1	K-14001-18-0-*
	Rod length 3500 mm	1	K-14001-33-0-*
altern.:	Rod, Ø 10 mm, stock length 6000 mm	1	9-23055-60-0-1
	Cover profile, stock length 6000 mm	1	9-34497-60-0-*

Assembly drawing 0-42913

Special versions
Standard version, minimum dimensions

Special versions

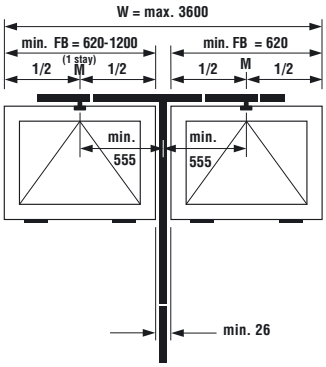

Fan-light opener VENTUS F 200
Common centre operation of 2 side by side sashes, type 2n with T angle (optional part)

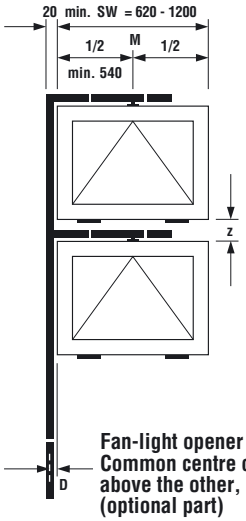

Fan-light opener VENTUS F 200
Common centre operation of 2 sashes one above the other, type 2ü with T angle (optional part)

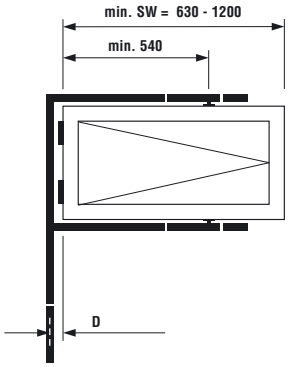

Fan-light opener VENTUS F 200
Side hung sash with T angle (optional part)

Standard version, minimum dimensions

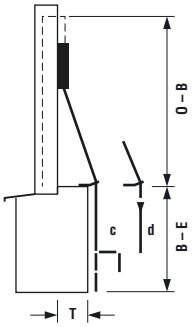

O-B min. Vert.	Cor.	T
395	200	30
430	200	60
465	200	90
500	210	120
535	245	150
570	280	180
610	315	210
645	350	240
680	390	270
715	425	300

B-E min. Vert.	Cor.	Type
475	475	c
515	515	d

O-E min. Vert.	Cor.	Type
800	505	a
850	555	b

Vertical and corner gears
Types a, b, c and d

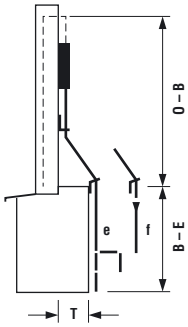

O-B min.	T
600	30
650	60
700	90
755	120
805	150
860	180
910	210
960	240
1015	270
1070	300

B-E min.	Type
475	e
515	f

Vertical gear
Types e and f

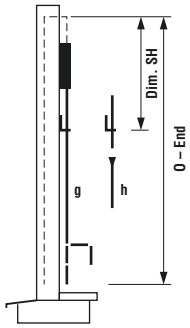

dim. SH min.
350

O-End min.	Type
885	g
935	h

Vertical gear
Types g and h

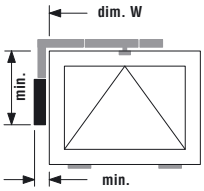

	ELTRAL S [1]	300
Space requirement	39	56
Installation height	468	400
dim. W min.	620	605
dim. W max.	3600	6000

[1] ELTRAL S 230 L, S 230 E

ELTRAL, vertical installation on the side

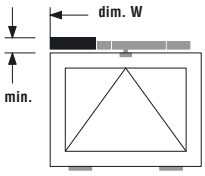

	ELTRAL S [1]	300
Space requirement	39	56
dim. W min.	825	850
dim. W max.	3600	6000

[1] ELTRAL S 230 L, S 230 E

ELTRAL horizontal installation at the top

Rods cut to measure, minimum dimensions

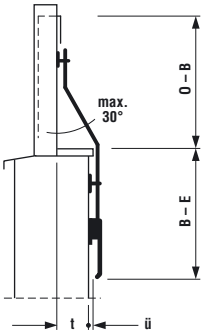

O-B min.	T+Ü	Ü max.
300	30	5
350	60	5
420	100	5
475	130	5

Rod transmission
Ø 10 mm
dim. T + Ü max. 130 mm

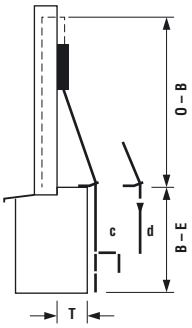

O-B min. Vert.	Cor.	T
395	200	30
430	200	60
465	200	90
500	210	120
535	245	150
570	280	180
610	315	210
645	350	240
680	390	270
715	425	300

B-E min. Vert.	Cor.	Type
475	475	c
515	515	d

O-E min. Vert.	Cor.	Type
800	505	a
850	555	b

Vertical and corner gears
Type a, b, c and d

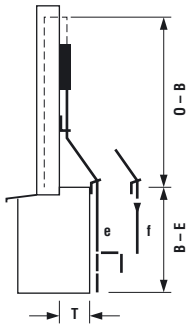

O-B min.	T
600	30
650	60
700	90
755	120
805	150
860	180
910	210
960	240
1015	270
1070	300

B-E min.	Type
475	e
515	f

Vertical gear
Type e and f

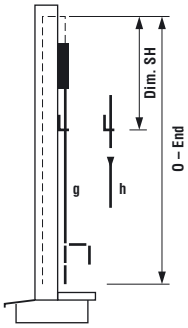

dim. SH min.
350

O-End min.	Type
885	g
935	h

Vertical gear
Type g and h

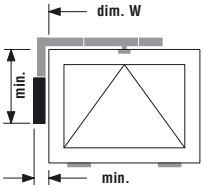

	ELTRAL S [1]	300
Space requirement	39	56
Installation height	468	400
dim. W min.	620	605
dim. W max.	3600	6000

[1] ELTRAL S 230 L, S 230 E

ELTRAL, vertical installation on the side

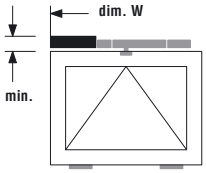

	ELTRAL S [1]	300
Space requirement	39	56
dim. W min.	825	850
dim. W max.	3600	6000

[1] ELTRAL S 230 L, S 230 E

ELTRAL horizontal installation at the top

Fan-light opener VENTUS F 300
Lever handle

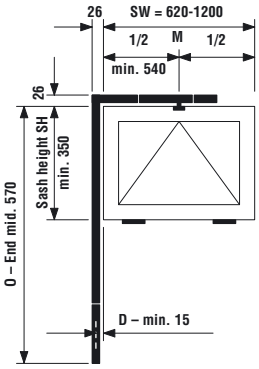

Scheme 1
Lever handle

Rod length depending on total sash width and dim. O-End

O-End	Length of vertical rod	Total sash width dim. SW or W up to 1200 Length of horizontal rod 540
1000	765	1305
1100	865	1405
1200	965	1505
1300	1065	1605
1400	1165	1705
1500	1265	1805
1600	1365	1905
1700	1465	2005
1800	1565	2105
1900	1665	2205
2000	1765	2305

Rod and cover profile size 33 = grey, 60 = white

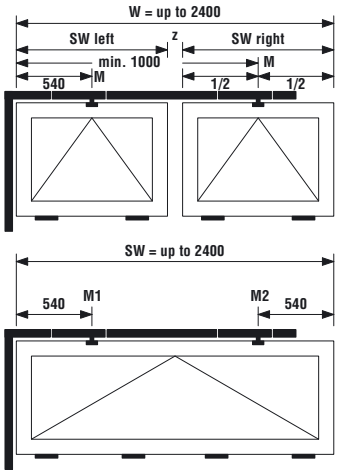

Scheme 2n

Rod length depending on total sash width and dim. O-End

O-End	Length of vertical rod	Total sash width dim. SW or W 1400	1600	1800	2000	2200	2400
		Length of horizontal rod 1200	1400	1600	1800	2000	2200
1000	765	1965	2165	2365	2565	2765	2965
1100	865	2065	2265	2465	2665	2865	3065
1200	965	2165	2365	2565	2765	2965	3165
1300	1065	2265	2465	2665	2865	3065	3265
1400	1165	2365	2565	2765	2965	3165	3365
1500	1265	2465	2665	2865	3065	3265	3465
1600	1365	2565	2765	2965	3165	3365	3565
1700	1465	2665	2865	3065	3265	3465	3665
1800	1565	2765	2965	3165	3365	3565	3765
1900	1665	2865	3065	3265	3465	3665	3865
2000	1765	2965	3165	3365	3565	3765	3965

Rod and cover profile size 33 = grey, 60 = white

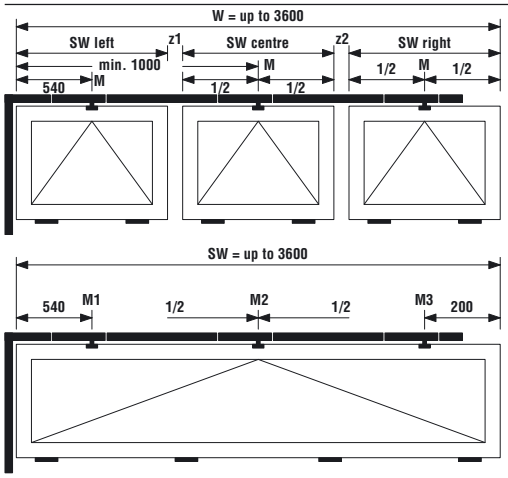

Scheme 3n

Rod length depending on total sash width and dim. O-End

O-End	Length of vertical rod	Total sash width dim. SW or W 2600	2800	3000	3200	3400	3600
		Length of horizontal rod 2400	2600	2800	3000	3200	3400
1000	765	3165	3365	3565	3765	3965	4165
1100	865	3265	3465	3665	3865	4065	4265
1200	965	3365	3565	3765	3965	4165	4365
1300	1065	3465	3665	3865	4065	4265	4465
1400	1165	3565	3765	3965	4165	4365	4565
1500	1265	3665	3865	4065	4265	4465	4665
1600	1365	3765	3965	4165	4365	4565	4765
1700	1465	3865	4065	4265	4465	4665	4865
1800	1565	3965	4165	4365	4565	4765	4965
1900	1665	4065	4265	4465	4665	4865	5065
2000	1765	4165	4365	4565	4765	4965	5165

Rod and cover profile size 33 = grey, 60 = white

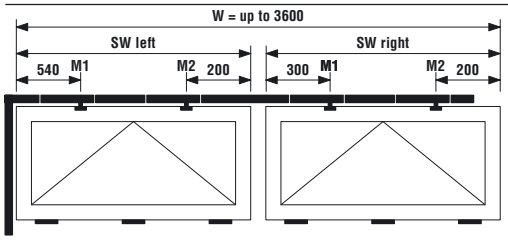

Scheme 4n

Rod length depending on total sash width and dim. O-End

O-End	Length of vertical rod	Total sash width dim. SW or W 2600	2800	3000	3200	3400	3600
		Length of horizontal rod 2400	2600	2800	3000	3200	3400
1000	765	3165	3365	3565	3765	3965	4165
1100	865	3265	3465	3665	3865	4065	4265
1200	965	3365	3565	3765	3965	4165	4365
1300	1065	3465	3665	3865	4065	4265	4465
1400	1165	3565	3765	3965	4165	4365	4565
1500	1265	3665	3865	4065	4265	4465	4665
1600	1365	3765	3965	4165	4365	4565	4765
1700	1465	3865	4065	4265	4465	4665	4865
1800	1565	3965	4165	4365	4565	4765	4965
1900	1665	4065	4265	4465	4665	4865	5065
2000	1765	4165	4365	4565	4765	4965	5165

Rod and cover profile size 33 = grey, 60 = white

Fan-light opener VENTUS F 300
Vertical and corner gears, ELTRAL – vertical and horizontal installation

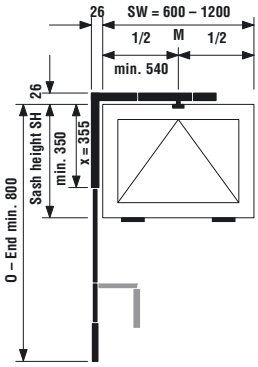

Scheme 1
Vertical gear

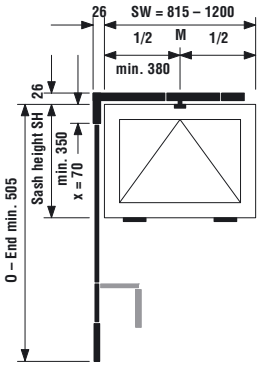

Scheme 1
Corner gear

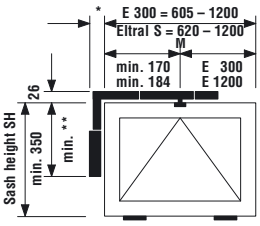

Scheme 1
ELTRAL vertical, min. dimensions

	ELTRAL S [1]	300
*	39	56
**	468	400
W max.	3600	6000

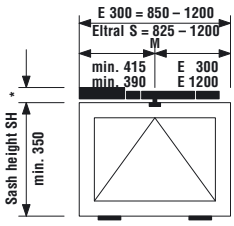

Scheme 1
ELTRAL horizontal, min. dimensions

	ELTRAL S [1]	300
*	39	56
W min.	825	850
W max.	3600	6000

Length of horizontal rod depending on total sash width

Drive	Total sash width dim. FB or B 700	800	1000	1200
Vertical gear	540	540	540	540
Corner gear		585	635	735

Length of horizontal rod depending on total sash width

Drive	Total sash width dim. SW or W 700	800	1000	1200	
ELTRAL S vertical [1]	730	830	990	1090	[1]
ELTRAL S horizontal [1]		540	650	750	ELTRAL S 230 L
ELTRAL 300 vertical	610	710	870	970	S 230 E
ELTRAL 300 horizontal			620	720	

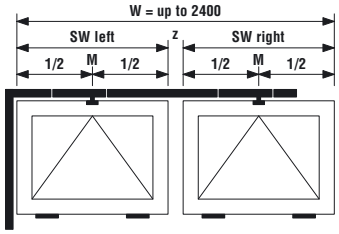

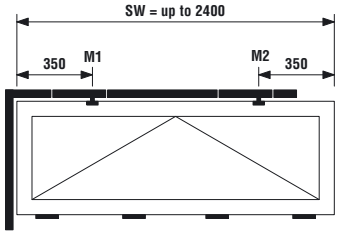

Scheme 2n

Length of horizontal rod depending on total sash width

Drive	Total sash width dim. SW or W 1400	1600	1800	2000	2200	2400
Vertical gear	1200	1400	1600	1800	2000	2200
Corner gear	1145	1345	1545	1745	1945	2145
ELTRAL S vertical [1]	1430	1630	1830	2030	2230	2430
ELTRAL S horizontal [1]	1090	1290	1490	1690	1890	2090
ELTRAL 300 vertical	1310	1510	1710	1910	2110	2310
ELTRAL 300 oben	1060	1260	1460	1660	1860	2060

[1] ELTRAL S 230 L, S 230 E

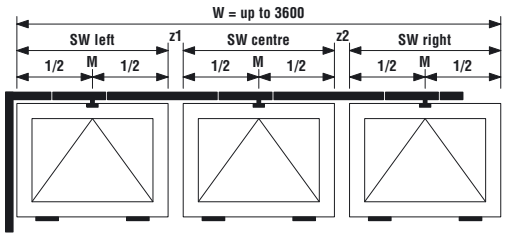

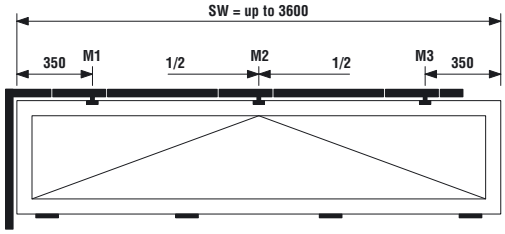

Scheme 3n

Length of horizontal rod depending on total sash width

Drive	Total sash width dim. SW or W 2600	2800	3000	3200	3400	3600
Vertical gear	2400	2600	2800	3000	3200	3400
Corner gear	2345	2545	2745	2945	3145	3345
ELTRAL S vertical [1]	2630	2830	3030	3230	3430	3630
ELTRAL S horizontal [1]	2290	2490	2690	2890	3090	3290
ELTRAL 300 vertical	2510	2710	2910	3110	3310	3510
ELTRAL 300 oben	2260	2460	2660	2860	3060	3260

[1] ELTRAL S 230 L, S 230 E

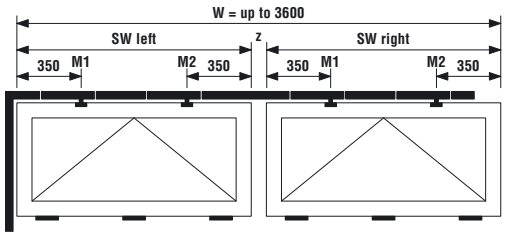

Scheme 4n

Length of horizontal rod depending on total sash width

Drive	Total sash width dim. SW or W 2600	2800	3000	3200	3400	3600
Vertical gear	2400	2600	2800	3000	3200	3400
Corner gear	2345	2545	2745	2945	3145	3345
ELTRAL S vertical [1]	2630	2830	3030	3230	3430	3630
ELTRAL S horizontal [1]	2290	2490	2690	2890	3090	3290
ELTRAL 300 vertical	2510	2710	2910	3110	3310	3510
ELTRAL 300 horizontal	2260	2460	2660	2860	3060	3260

[1] ELTRAL S 230 L, S 230 E

ELTRAL S 230 L, ELTRAL S 230 E, ELTRAL S 24 L
ELTRAL 300 E1, ELTRAL 300/24

Application, illustration	Description			PU	Article No.
Aluminium windows	**Electric drive ELTRAL S 230 L for face-fixed fan-light openers**			1	6-31730-00-0-*
	Technical data				
	Supply voltage/frequence	V/Hz	230/50		
	Current consumption	A	0,15		
	Protection class		IP 50		
	Limit switch		load interruption		
	Intermittent duty ratio	%	20		
	Connecting plug		4-pin		
	Stroke max.	mm	70		
	Runtime per stroke of 50 mm	sec.	50		
	Pushing force	N	1200		
	Length	mm	210		
	Width	mm	36		
	Height	mm	76		
	Electric drive ELTRAL S 230 E for face-fixed fan-light openers			1	6-31732-00-0-*
	Technical data				
	Supply voltage/frequence	V/Hz	230/50		
	Current consumption	A	0,15		
	Protection class		IP 50		
	Limit switch		load interruption		
	Adjustment of opening width		electronic		
	Intermittent duty ratio	%	20		
	Connecting plug		4-pin		
	Stroke max.	mm	70		
	Runtime per stroke of 50 mm	sec.	50		
	Pushing force	N	1200		
	Length	mm	210		
	Width	mm	36		
	Height	mm	76		
	Elektroantrieb ELTRAL S 24 L for face-fixed fan-light openers			1	6-31734-00-0-*
	Technical data				
	Supply voltage/frequence	V DC	24		
	Current consumption	A	0,7		
	Protection class		IP 54		
	Limit switch		load interruption		
	Intermittent duty ratio	%	20		
	Connecting plug		4-polig		
	Stroke max.	mm	70		
	Runtime per stroke of 50 mm	sec.	45		
	Pushing force	N	1200		
	Length	mm	210		
	Width	mm	36		
	Height	mm	76		
Aluminium windows	**Electric drive ELTRAL 300 E1 for face-fixed fan-light openers**			1	9-31020-01-0-*
	Technical data				
	Supply voltage/frequence	V/Hz	230/50		
	Current consumption	A	0,10		
	Protection class		IP 54		
	Limit switch		included		
	Intermittent duty ratio	%	100		
	Cross section of cable	mm²	4 x 0,75		
	Cable length approx.	mm	1500		
	Stroke	mm	30-100		
	Factory set stroke	mm	40		
	Runtime per stroke of 50 mm	sec.	50		
	Pushing force	N	3000		
	Length	mm	270		
	Width	mm	55		
	Height	mm	102		
	Electric drive ELTRAL 300/24 for face-fixed fan-light openers			1	9-31021-00-0-*
	Technical data				
	Supply voltage/frequence	V DC	24		
	Current consumption	A	0,8		
	Protection class		IP 54		
	Limit switch		vorhanden		
	Intermittent duty ratio	%	100		
	Cross section of cable	mm²	4 x 0,75		
	Cable length approx.	mm	1500		
	Stroke	mm	100		
	Factory set stroke	mm	40		
	Runtime per stroke of 50 mm	sec.	50		
	Pushing force	N	3000		
	Length	mm	270		
	Width	mm	55		
	Height	mm	102		

Variable stroke, push/pull force up to 300 N

Fitting requirements for tilt sashes, top hung sashes and skylight

Application, illustration	Tilt sash	Description	PU	Article No.
Aluminium windows	1	**Chain drive ELTRAL KS 30/40 Solo – 230 V** [1] eincluding chain holder for tilt sash, chain bracket for top hung opening outward sash, pivoting brackets for both frame and soffit mounting	1	K-17433-00-0-*
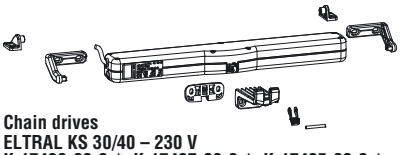 **Chain drives** **ELTRAL KS 30/40 – 230 V** **K-17433-00-0-*, K-17437-00-0-*, K-17435-00-0-***	1	alternatively for operation via hand-held radio transmitter: **Chain drive ELTRAL KS 30/40 Remote Solo – 230 V** [1] eincluding chain holder for tilt sash, chain bracket for top hung opening outward sash, pivoting brackets for both frame and soffit mounting	1	K-17437-00-0-*
 **Hand-held transmitter KS 30/40** **K-17439-00-0-0**	1	**Hand-held transmitter KS 30/40**	1	K-17439-00-0-0
	1	**Chain drive ELTRAL KS 30/40 Synchro – 230 V** [1] eincluding chain holder for tilt sash, chain bracket for top hung opening outward sash, pivoting brackets for both frame and soffit mounting	2	K-17435-02-0-*
Chain holder for top hung sash KS 30/40 **9-44272-00-0-***		alternatively: Accessories for assembly on skylights and frame/mullion elements **Chain holder for top hung sash KS 30/40** [1] – horizontal top mounting	1	9-44272-00-0-*
Bag of chain holder for top hung sash KS 30/40 **K-17441-00-0-***		**Bag of chain holder for top hung sash KS 30/40** [1] – vertical front mounting	1	K-17441-00-0-*
Bag of pivoting bracket KS 30/40 **K-17440-00-0-***		**Bag of pivoting bracket KS 30/40** [1] – for skylight with low sash height	1	K-17440-00-0-*
		Bag of mounting bracket kit KS 30/40 [1] – inward opening	1	K-17720-00-0-*

Technical description
- User-friendly chain connection for simple release of sash
- pivoting brackets allow for use with low sash height
- electronic limit switch, self-positioning via microprocessor
- easy stroke adjustment: 110, 200, 300 and 400 mm (variable)

Technical data

– Supply voltage/frequence	230 V AC, 50 Hz
– Thrust/traction max.	300 N per drive
– Stroke – adjustable with DIP switch	110, 200, 300 and 400 mm
– Running time – 2/3 load	
ELTRAL KS 30/40 – 230 V	12 mm/s
ELTRAL KS 30/40 Remote – 230 V	10 mm/s
– Nominal current	0,12 A
– Intermittent duty ratio	30 %
– Ambient temperature	-5 to +65 °C
– Protection class	IP 30
– parallel switchable	up to max. 8 drives
– Connecting cable, fix	3 x 0,75 mm², ca. 2 m
– Length x Depth x Height	386,5 x 59 x 37 mm

[1] = Colour: 1 = grey (RAL 7047), 6 = black (RAL 9005), 7 = white (RAL 9016)

Variable stroke, push/pull force up to 300 N

Fitting requirements for tilt sashes, top hung sashes and skylight

Application, illustration	Tilt sash	Description	PU	Article No.
Aluminium windows	1	**Chain drive ELTRAL KS 30/40 Solo – 24 V** [1] eincluding chain holder for tilt sash, chain bracket for top hung opening outward sash, pivoting brackets for both frame and soffit mounting	1	K-17434-00-0-*
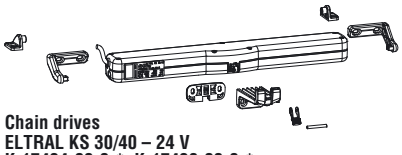 **Chain drives** **ELTRAL KS 30/40 – 24 V** **K-17434-00-0-*, K-17436-00-0-***	1	**Chain drive ELTRAL KS 30/40 Synchro – 24 V** [1] eincluding chain holder for tilt sash, chain bracket for top hung opening outward sash, pivoting brackets for both frame and soffit mounting	2	K-17436-02-0-*
Chain holder for top hung sash KS 30/40 **9-44272-00-0-***		alternatively: Accessories for assembly on skylights and frame/mullion elements **Chain holder for top hung sash KS 30/40** [1] – horizontal top mounting	1	9-44272-00-0-*
Bag of chain holder for top hung sash KS 30/40 **K-17441-00-0-***		**Bag of chain holder for top hung sash KS 30/40** [1] – vertical front mounting	1	K-17441-00-0-*
Bag of pivoting bracket KS 30/40 **K-17440-00-0-***		**Bag of pivoting bracket KS 30/40** [1] – for skylight with low sash height	1	K-17440-00-0-*
		Bag of mounting bracket kit KS 30/40 [1] – inward opening	1	K-17720-00-0-*

Technical description
- User-friendly chain connection for simple release of sash
- pivoting brackets allow for use with low sash height
- electronic limit switch, self-positioning via microprocessor
- easy stroke adjustment: 110, 200, 300 and 400 mm (variable)

Technical data

– Supply voltage/frequence	24 V DC
– Thrust/traction max.	300 N per drive
– Stroke – adjustable with DIP switch	110, 200, 300 and 400 mm
– Running time – 2/3 load	10 mm/s
– Nominal current	0,9 A
– Intermittent duty ratio	30 %
– Ambient temperature	-5 to +65 °C
– Protection class	IP 30
– Connecting cable, fix	ca. 2 m
– Length x Depth x Height	386,5 x 59 x 37 mm

[1] = Colour: 1 = grey (RAL 7047), 6 = black (RAL 9005), 7 = white (RAL 9016)

Variable stroke, push/pull force up to 300 N

Dimensional drawing chain drive

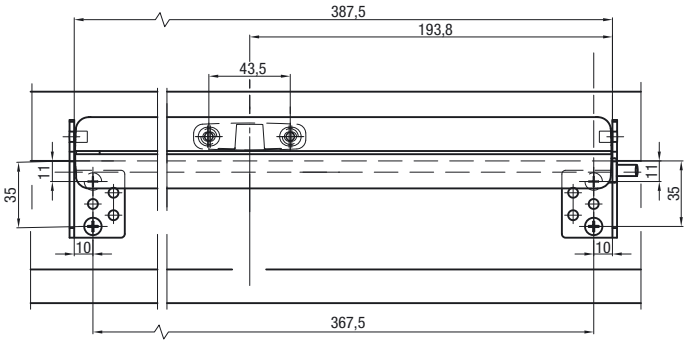

Load-displacement diagram

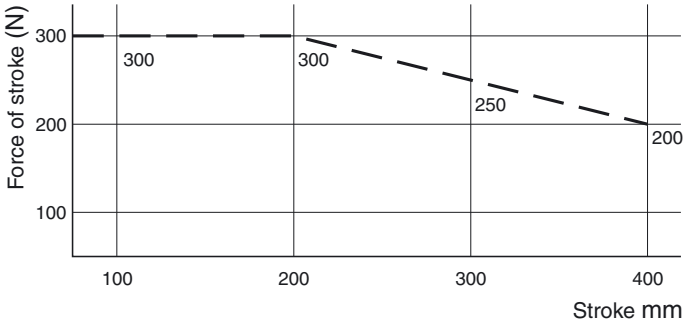

Assembly drawings

Tilt sashes inward opening – frame mounting

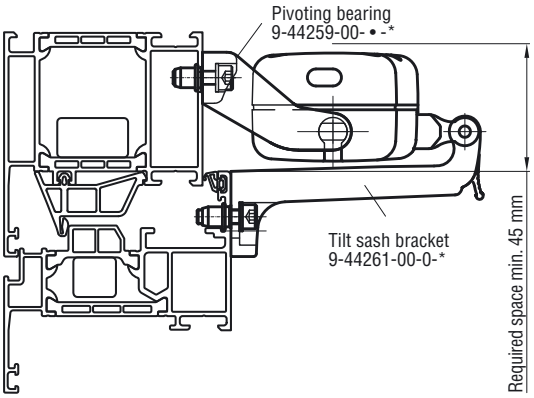

Fitting requirements for frame mounting

Qty.	Description	PU	Article No.
2	Pivoting bearing KS 30/40 [1] [2]	1	9-44259-00- • -*
1	Tilt sash bracket KS 30/40 [1]	1	9-44261-00-0-*

[1] * Colour: 1 = grey (RAL 7047), 6 = black (RAL 9005), 7 = white (RAL 9016)
[2] • L = left, R = right

Min. sash height according to stroke

Stroke mm	100	200	300	400
Min. sash height mm	250	600	1100	1500

Assembly drawings
Hueck 0-45220 / 0-45221 / 0-45222 / 0-45223 / 0-45224
Reynaers 0-45225 / 0-45226 / 0-45227 / 0-45228
Wicona 0-45229 / 0-45230 / 0-45231 / 0-45232 / 0-45233 / 0-45234
Schüco 0-45072 / 0-45073 / 0-45074 / 0-45075 / 0-45076 / 0-45077 / 0-45078

Instruction for installation and operating guidelines
ELTRAL KS 30/40 Solo and Synchro M-00158-00
ELTRAL KS 30/40 Remote Solo M-00159-00

Tilt sashes inward opening – sash mounting

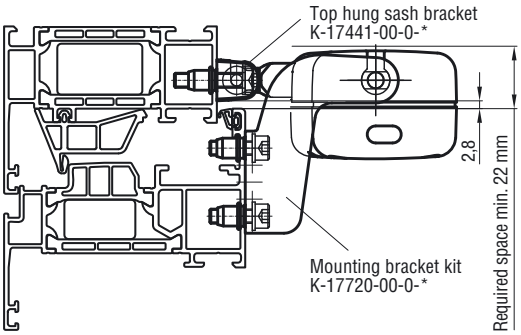

Fitting requirements for sash mounting

Qty.	Description	PU	Article No.
1	Bag of top hung sash bracket KS 30/40 [1]	1	K-17441-00-0-*
1	Bag of mounting bracket kit KS 30/40 [1]	1	K-17720-00-0-*

[1] = Colour: 1 = grey (RAL 7047), 6 = black (RAL 9005), 7 = white (RAL 9016)

Min. sash height according to stroke

Stroke mm	100	200	300	400
Min. sash height mm	200	400	650	900

Assembly drawings
Hueck 0-45208 / 0-45209 / 0-45210
Reynaers 0-45212 / 0-45213
Wicona 0-45214 / 0-45215 / 0-45216
Schüco 0-45069 / 0-45070 / 0-45071

Instruction for installation and operating guidelines
ELTRAL KS 30/40 Solo and Synchro M-00158-00
ELTRAL KS 30/40 Remote Solo M-00159-00

Stroke 200 to 400 mm, push/pull force up to 250 N

Application, illustration	Description	PU	Article No.
Aluminium windows			

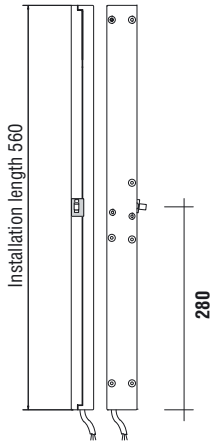

Chain drive ELTRAL K 25 Solo – 230 V

Typ	Stroke mm	Thrust N	Traction N	PU	Article No.
K 25/200	200	250	250	1	K-17647-20-0-1
K 25/300	300	250	250	1	K-17647-30-0-1
K 25/400	400	250	250	1	K-17647-40-0-1

Chain drive ELTRAL K 25 Synchro – 230 V

Typ	Stroke mm	Thrust N	Traction N	PU	Article No.
K 25/200	200	250/drive	250/drive	2	K-17582-20-0-1
K 25/300	300	250/drive	250/drive	2	K-17582-30-0-1
K 25/400	400	250/drive	250/drive	2	K-17582-40-0-1

Technical description
High-performance chain drive
– For application preferably on side hung, tilt and top hung outward opening sashes
– Suitable for installation in the profile and concealed assembly
– Electronically controlled soft load interruption
– Casing of zinc die cast, plastics coated (RAL 9006)
– Reinforced sidebow chain, stainless steel
– Cable extension and stroke reduction not possible

Technical data

– Supply voltage/frequence	230 V AC, 50 Hz
– Current consumption	max. 0,2 A
– Running time – 2/3 load	7,0 mm/s
– Intermittent duty ratio	25 %
– Ambient temperature	-5 to +75 °C
– Protection class	IP 32
– Height	30 mm
– Depth	42 mm
– Connecting cable	4 x 0,75 mm², ca. 3 m

Assembly of ELTRAL K 25 – 230 V	**Mounting set K 25** **for tilt sashes inward opening – frame mounting** consisting of: – Mounting bracket kit K 20 / K 25 (K-17634-00-0-8) – Mounting bracket kit K 20 / K 25 (K-17633-00-0-8)	1	K-17594-00-0-8
	Mounting set K 25 **for tilt sashes inward opening – sash mounting** **for top hung sashes outward opening – frame mounting** consisting of: – Sash bracket K 20 / K 25 (K-17632-00-0-1) – Mounting bracket K 20 / K 25 (9-44724-00-9-8)	1	K-17595-00-0-8

Note:
Operating methods dubble (tandem) on request.

Assembly drawings

Tilt sashes inward opening – frame mounting

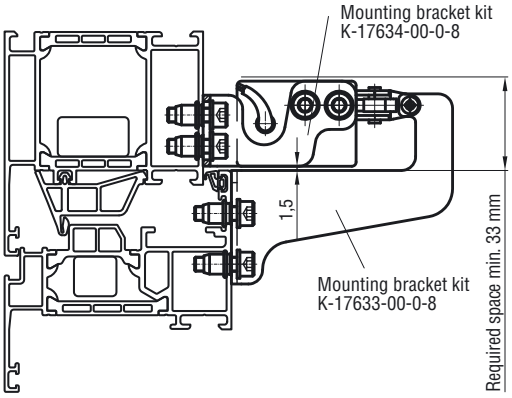

Min. sash height according to stroke

Stroke mm	200	300	400
Min. sash height mm	250*/425	350*/500	550*/600

* = with pivotable motor (attached with front screw only)

Assembly drawings
Hueck 0-45053 / 0-45056
Reynaers 0-45035 / 0-45037
Wicona 0-45020 / 0-45021
Schüco 0-44975 / 0-44976 / 0-44978 / 0-44980

Instruction for installation and operating guideline
ELTRAL K 25 Solo and Synchro 0-44929-GL-0

Tilt sashes inward opening – sash mounting
Top hung sashes outward opening – frame mounting

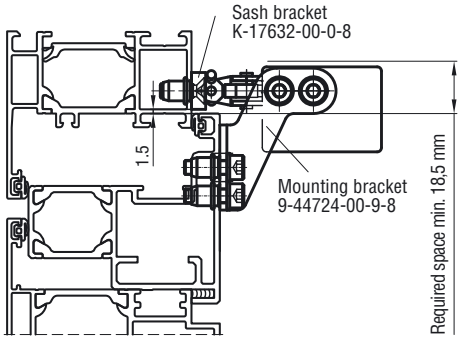

Min. sash height according to stroke

Stroke mm	200	300	400
Min. sash height mm	325	500	750

Assembly drawings
Hueck 0-45051 / 0-45052 / 0-45054 / 0-45055
Reynaers 0-45033 / 0-45034 / 0-45036 / 0-45038
Wicona 0-45017 / 0-45018 / 0-45019 / 0-45022 / 0-45023 / 0-45024 / 0-45025
Schüco 0-44977 / 0-44979 / 0-44981 / 0-44982 / 0-44983 / 0-44984

Instruction for installation and operating guideline
ELTRAL K 25 Solo and Synchro 0-44929-GL-0

Stroke 250 to 400 mm, push/pull force up to 600 N

Application, illustration	Description	PU	Article No.
Aluminium windows	**Kettenantrieb ELTRAL K 60 Solo – 230 V**		

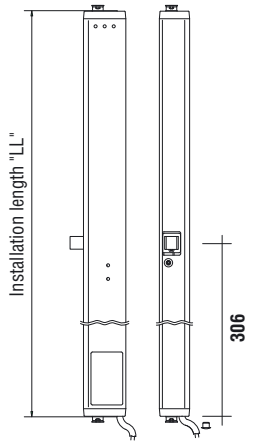

Typ	Stroke mm	Thrust N	Traction N	Length "LL" mm	PU	Article No.
K 60/250	250	600	600	537	1	K-17649-25-0-1
K 60/400	400	600	600	613	1	K-17649-40-0-1

Technical description
- Chain drive for high pressure loads
- Soft load interruption via integrated microcontroller module
- Stainless steel chain
- Stepless control of running smoothness with small load due to adjustable chain tension
- Low power consumption
- Mechanic release of chain for assembly or disassembly
- Sash height depending on type of mounting bracket
- Aluminium drive casing, EV 1 anodised
- Cable extension not possible!

Technical data

– Supply voltage/frequence	230 V AC, 50 Hz
– Current consumption	0,2 A
– Running time – $^{2}/_{3}$ load	10,0 mm/s
– Intermittent duty ratio	30%
– Protection class	IP 32
– Ambient temperature	-5°C bis +75°C
– Connectable in parallel	bis max. 8 Antriebe
– Connecting cable	6 x 0,75 mm², ca. 5 m
– Height x Depth	40 x 56 mm

Assembly of ELTRAL K 60 – 230 V

Mounting set K 60
for tilt sashes inward opening – frame mounting
consisting of:
- 2 x mounting bracket K 60 (9-44860-00-0-0)
- 1 x Z-mounting bracket K 60 (9-44713-00-0-0)

1 — K-17662-00-0-1

Mounting set K 60
for tilt sashes inward opening – sash mounting
for top hung sashes outward opening – frame mounting

Mounting bracket, short — 1 — K-17596-00-0-8
consisting of:
- Sash bracket K 60 (K-17641-00-0-1)
- Mounting bracket K 60 (9-44726-00-9-8)

Mounting bracket, long — 1 — K-17598-00-0-8
consisting of:
- Sash bracket K 60 (K-17641-00-0-1)
- Mounting bracket K 60 (9-44727-00-9-8)

Mounting set K 60
for tilt sashes – sash mounting
for top hung sashes – frame mounting
consisting of:
- Sash bracket K 60 (K-17641-00-0-1)
- Folding bracket K 60 (K-17642-00-0-1)

1 — K-17660-00-0-1

Accessories ELTRAL K 60 – 230 V

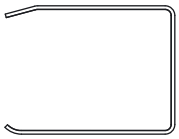

Cover profile K 60
made from anodised aluminium, provides for:
- protection against dirt
- individual colouring
- sophisticated appearance

Length mm	PU	Article No.
1450	1	9-42211-00-0-1
3000	1	9-42212-00-0-1

Mounting set for Cover profile K 60
consisting of: — 1 — K-17719-00-0-1
- 1 lateral cover, lh
- 1 lateral cover, rh
- 2 spacers
- 4 adhesive points
- 1 sealing plug (for cable outlet)

Note:
Operating methods dubble (tandem) on request.

Stroke 250 to 400 mm, push/pull force up to 600 N

Assembly drawings

Tilt sashes inward opening – frame mounting

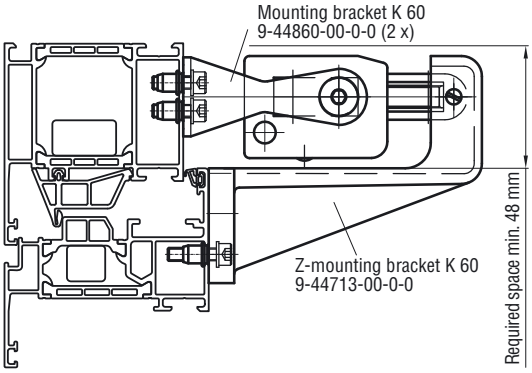

Min. sash height according to stroke

Stroke mm	250	400
Min. sash height mm	350	700

Assembly drawings
Hueck 0-45193 / 0-45194
Reynaers 0-45115
Wicona 0-45200 / 0-45201
Schüco 0-45104 / 0-45105

Instruction for installation and operating guideline
ELTRAL K 60 0-44937-GL-0

Tilt sashes inward opening – sash mounting
Top hung sashes outward opening – frame mounting

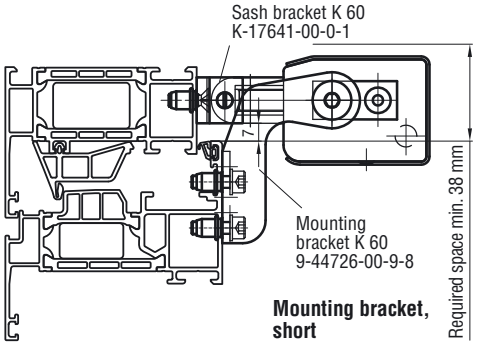

Min. sash height according to stroke

Stroke mm		250	400
Min. sash height mm	Mounting bracket, short	450	750

Assembly drawings
Hueck 0-45177 / 0-45178 / 0-45195 / 0-45196
Reynaers 0-45111 / 0-45116
Wicona 0-45187 / 0-45188 / 0-45202 / 0-45203
Schüco 0-45098 / 0-45100 / 0-45106 / 0-45107

Instruction for installation and operating guideline
ELTRAL K 60 0-44937-GL-0

Tilt sashes – sash mounting
Top hung sashes – frame mounting

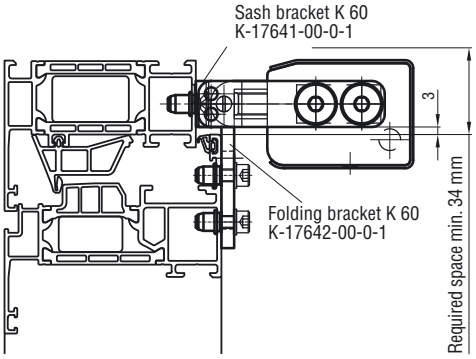

Min. sash height according to stroke

Stroke mm	250	400
Min. sash height mm	350	600

Assembly drawings
Hueck 0-45180 / 0-45181
Reynaers 0-45112
Wicona 0-45189 / 0-45190
Schüco 0-45099 / 0-45101

Instruction for installation and operating guideline
ELTRAL K 60 0-44937-GL-0

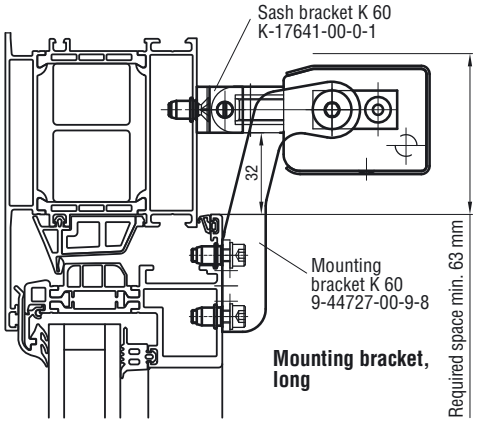

Min. sash height according to stroke

Stroke mm		250	400
Min. sash height mm	Mounting bracket, long	250	400

Assembly drawings
Hueck 0-45182
Reynaers 0-45113
Wicona 0-45191
Schüco 0-45102

Instruction for installation and operating guideline
ELTRAL K 60 0-44937-GL-0

Stroke 300 to 750 mm, force of stroke 800 N

Application, illustration	Description	PU	Article No.
Aluminium windows	**Spindle drive ELTRAL S 80 – 230 V**		
	**Types with various strokes**		
	Stroke 300 mm	1	9-42094-30-0-1
	Stroke 500 mm	1	9-42094-50-0-1
	Stroke 750 mm	1	9-42094-75-0-1
	Technical description – Maintenance-free linear spindle drive – Resistant against humidity and corrosion – Aluminium drive casing, EV 1 anodised – Suitable for tilt, top hung, side hung, horizontal and vertical pivot windows, light domes, sunblinds – Durable, low noise, spindle with self-locking – Limit switch and electronic load interruption		
	Technical data – Supply voltage/frequence: 230 V AC, 50 Hz – Current consumption: 0,15 A – Max. force of stroke: 800 N – Stress tested up to: 3500 N – Running time – $^2/_3$ load: 7,0 mm/s – Intermittent duty ratio: 30% – Protection class: IP 54 – Ambient temperature: -5°C to +75°C – Connectable in parallel: up to 8 drives at the maximum – Minimum length of drive: 493 mm with stroke 300 mm – Connecting cable: 6 x 0,75 mm², ca. 1 m		
Assembly of ELTRAL S 80 – 230 V	**Mounting set S 80** [1] consisting of: – Mounting bracket D/S – Sash bracket S/Z	1	K-17774-00-0-1

Assembly dim. = stroke + 190 mm

[1] = for sash height up to 400 mm

Load-displacement diagram

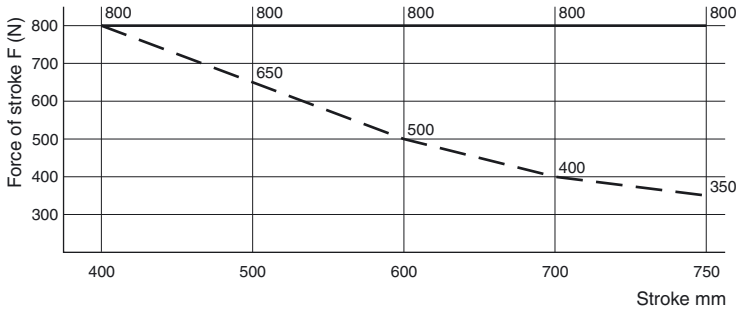

– mounting by the front part (1st third of motor length)

– mounting by the rear part (2nd and 3rd third of motor length)

Assembly drawings

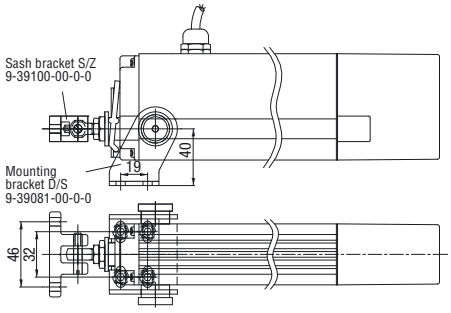

Mounting with mounting bracket D/S

Assembly drawings
0-45312 / 0-45309 / 0-45310

Instruction for installation and operating guideline
ELTRAL S 80 0-45289-GJ-0

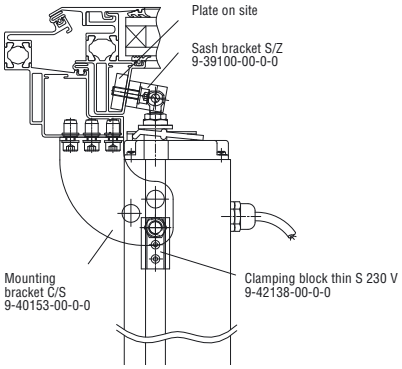

Mounting with mounting bracket C/S

Assembly drawing
0-45308

Instruction for installation and operating guideline
ELTRAL S 80 0-45289-GJ-0

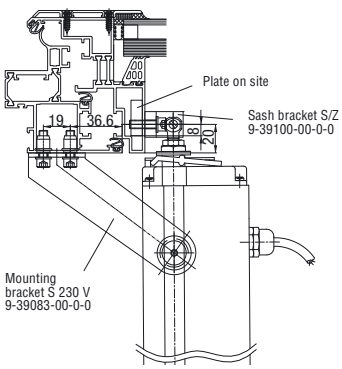

Mounting with mounting bracket S 230 V

Assembly drawing
0-45311

Instruction for installation and operating guideline
ELTRAL S 80 0-45289-GJ-0

Supports for sash, mounting brackets, clamping block thick

Application, illustration	Description	PU	Article No.
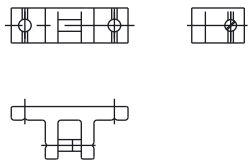	**Support for sash S/Z** – Aluminium Dimensions Width 60,0 mm Height 18,0 mm Depth 27,0 mm	1	9-39100-00-0-0
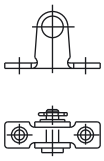	**Support for sash vertical S/Z** – steel zinc plated Dimensions Width 62,0 mm Height 17,0 mm Depth 37,0 mm	1	9-39102-00-0-1
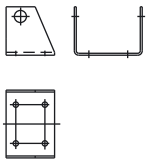	**Mounting bracket K 5** – steel zinc plated Dimensions Width 70,0 mm Height 50,0 mm Depth 50,0 mm	1	9-39078-00-0-1
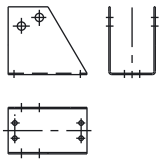	**Mounting bracket B/S** – steel zinc plated Dimensions Width 70,0 mm Height 120,0 mm Depth 102,0 mm	1	9-39079-00-0-1
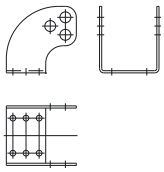	**Mounting bracket C/S** – stainless steel Dimensions Width 68,0 mm Height 80,0 mm Depth 76,0 mm	1	9-40153-00-0-1
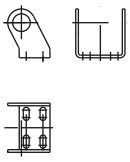	**Mounting bracket D/S** – clamp fixing, EV 1 colour Dimensions Width 56,0 mm Height 48,0 mm Depth 55,5 mm	1	9-39081-00-0-1
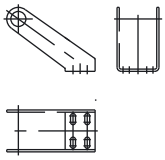	**Mounting bracket S 230 V** – clamp fixing, steel zinc plated Dimensions Width 56,0 mm Height 118,0 mm Depth 85,5 mm	1	9-39083-00-0-1
	**Clamping block thick S 230 V** Dimensions Width 36,0 mm Height 20,0 mm Thickness 12,3 mm	1	9-39093-10-0-0

Clamping block thin, eyescrew

Application, illustration	Description		PU	Article No.
	**Clamping block thin S 230 V** Dimensions		1	9-42138-00-0-0
	Width	36,0 mm		
	Height	20,0 mm		
	Thickness	7,0 mm		
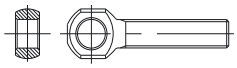	**Eyescrew** – steel zinc plated Dimensions	Ø of eye		
	M 8 x 40	8,0 mm	1	9-40097-08-0-1

Stroke 180 to 1000 mm, push/pull force up to 600 N

Application, illustration	Description		PU	Article No.
Timber windows	**Rack and pinion drive ELTRAL Z 60 – 230 V** [1]			
	Types with various strokes	**Length**		
	Stroke 180 mm	315 mm	1	K-17845-18-0-1
	Stroke 230 mm	365 mm	1	K-17845-23-0-1
	Stroke 350 mm	485 mm	1	K-17845-35-0-1
	Stroke 550 mm	685 mm	1	K-17845-55-0-1
	Stroke 750 mm	785 mm	1	K-17845-75-0-1
	Stroke1000 mm	1135 mm	1	K-17845-01-0-1
	Rack and pinion slave unit ELTRAL Z 60 – 230 V [1]			
	Types with various strokes			
	Stroke 180 mm		1	K-17844-18-0-1
	Stroke 230 mm		1	K-17844-23-0-1
	Stroke 350 mm		1	K-17844-35-0-1
	Stroke 550 mm		1	K-17844-55-0-1
	Stroke 750 mm		1	K-17844-75-0-1
	Stroke1000 mm		1	K-17844-01-0-1
	Connecting shaft [2] Length			
	1000 mm		1	9-45469-10-0-1
	1500 mm		1	9-45469-15-0-1
	2000 mm		1	9-45469-20-0-1
	2500 mm		1	9-45469-25-0-1
	Technical description – Suitable for tilt, top hung opening outward, side hung sashes, for light domes and roof flaps – Stainless steel push-pull tube – Limit switch and electronic load disconnection – Synchronisation of tandem and multiple systems via mechanical connecting rod			
	Technical data			
	– Supply voltage/frequence	230 V AC, 50 Hz		
	– Current consumption	0,145 A		
	– Push/pull force up to	600 N		
	– Locking force	3000 N		
	– Running time – 2/3 load	11 mm/s		
	– Intermittent duty ratio	30 %		
	– Protection class	IP 55		
	– Ambient temperature	-5°C to +65°C		
	– Connecting cable	2 m, 3-adrig		
Assembly of ELTRAL Z 60 – 230 V	**Set fixing screws**		1	K-17846-00-0-1
	Mounting bracket		1	9-45466-00-0-1
	Support for sash		1	9-45465-00-0-1

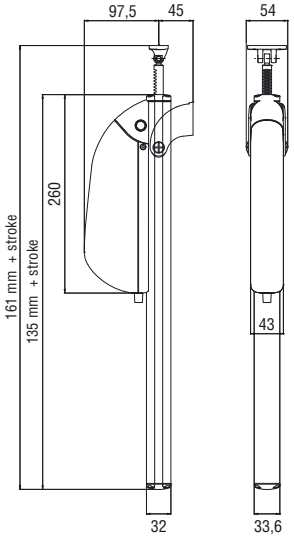

Rack and pinion driveELTRAL Z 60

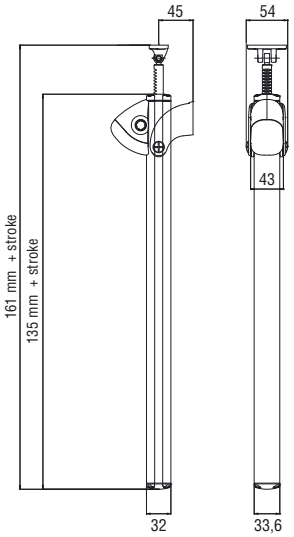

Rack and pinion slave ELTRAL Z 60

[1] In the case of tandem or multiple systems, and also for the combination 'drive plus slave unit' please order the corresponding number of drives, respectively slave units.
[2] For the combination 'drive plus slave unit' it is necessary to order the connecting shaft separately (length depending on sash width).

Rocker switches, key-type switch, pushbutton switches, labels, hand-held transmitter

Application, illustration	Description	PU	Article No.
Drives 230 V 	**Rocker switch »OPEN-STOP-CLOSED«**		
	unipolar, surface mounting	1	6-22539-00-0-0
	unipolar, flush mounting	1	6-22540-00-0-0
Drives 230 V 	**Rocker switch »OPEN-STOP-CLOSED«**		
	surface mounting	1	6-25220-00-0-0
	flush mounting	1	6-25219-00-0-0
Drives 230 V 	**Key-type switch »OPEN-STOP-CLOSED«** with profile half cylinder		
	flush mounting	1	6-22992-00-0-0
Drives 230 V 	**Labels**		
	Label »Ventilation«	1	9-25546-00-0-1
Drives 230 V 	**Hand-held transmitter 42 FH**		
		1	9-42496-00-0-0
Hand-held transmitter 42 FH 	**Radio actuator FAJ 6 UP**		
	Installation in flush-mounted socket 230 V AC 50Hz breaking capacity: 250 V ~700 VA	1	9-42495-00-0-0

Power supply units, rocker switches, key-type switch

Application, illustration	Description	PU	Article No.
Drives 230 V	**Power supply unit NT 2,4 / 24 V** PVC case, surface mounting	1	9-43994-00-0-0
	Technical description Power supply unit without synchronous-speed control for – Connection from max. 2 linear or chain drives – Parallel connection from max. 8 power supply units – Limit switch tap		
	Technical data – Supply voltage/frequence 230 V AC, 50 Hz – Output voltage 24 V DC – Nominal output 54 VA – Intermittent duty ratio 30 % – Protection class IP 54 – Width 120 mm – Height 200 mm – Depth 86 mm		
Drives 230 V	**Power supply unit NT 5 / 24 V** PVC case, surface mounting	1	9-43995-00-0-0
	Technical description Power supply unit for – Parallel connection from max. 8 power supply units		
	Technical data – Supply voltage/frequence 230 V AC, 50 Hz – Output voltage 24 V DC – Nominal output 120 VA – Intermittent duty ratio 30 % – Protection class IP 54 – Width 220 mm – Height 168 mm – Depth 106 mm		
Power supply units 24 V 	**Rocker switch »OPEN-STOP-CLOSED«** unipolar, surface mounting unipolar, flush mounting	 1 1	 6-22539-00-0-0 6-22540-00-0-0
Power supply units 24 V 	**Rocker switch »OPEN-STOP-CLOSED«** surface mounting flush mounting	 1 1	 6-25220-00-0-0 6-25219-00-0-0
Power supply units 24 V 	**Key-type switch »OPEN-STOP-CLOSED«** with profile half cylinder flush mounting	 1	 6-22992-00-0-0

Drilling jigs and auxiliary tools – VENTUS F 200

Application	Description	PU	Article No.
Tilt windows	**Drilling jigs and auxiliary tools**		
	Drilling jig for F 200 with angular sash bracket or angular sash bracket standard – up to 16 mm sash overlap	1	6-29410-30-0-9
	Drilling jig for F 200 with angular sash bracket, angular sash bracket standard or flat sash bracket – up to 16 mm sash overlap	1	6-29411-00-0-9
	Drilling jig for F 200 with angular sash bracket or angular sash bracket standard – from 16 mm sash overlap	1	6-33234-30-0-9
	Drilling jig for F 200 with angular sash bracket, angular sash bracket standard or flat sash bracket – from 16 mm sash overlap	1	6-33235-00-0-9
	Drilling jig to couple for F 200 with angular sash bracket or angular sash bracket standard – up to 16 mm sash overlap	1	6-29474-01-0-9
	Drilling jig to couple for F 200 with angular sash bracket, angular sash bracket standard or flat sash bracket – up to 16 mm sash overlap	1	6-29474-02-0-9
	Drilling jig to couple for F 200 with angular sash bracket or angular sash bracket standard – from 16 mm sash overlap	1	6-33236-01-0-9
	Drilling jig to couple for F 200 with angular sash bracket, angular sash bracket standard or flat sash bracket – from 16 mm sash overlap	1	6-33236-02-0-9
	Drilling jig for F 200 with sash bracket, fitting groove	1	6-33615-00-0-1
	Drilling jig for lever handle VENTUS F 200	1	9-30911-00-0-1
	Drilling jig for additional lockings, horizontal and vertical	1	9-29311-00-0-1
	Drilling jig for arch and segmental arch 1 stay	1	9-39659-00-0-0
	Drilling jig for articulated sash bracket	1	6-29650-00-0-1
Top hung windows	Drilling jig for F 200 outward opening Stay and angular sash bracket dim. Y = 0-40 mm	1	6-29490-00-0-0
	Drilling jig angle F 200 outward opening Angular sash bracket dim. Y = 41-75 mm	1	6-29583-00-0-0

Drilling jigs – VENTUS F 300

Application	Description	PU	Article No.
Tilt windows	**Drilling jigs**		
	Drilling jig for corner transmission	1	6-26980-00-0-0
	Drilling jig for stay and lever handle	1	6-26981-00-0-0
	Drilling jig for lever handle VENTUS F 300	1	9-35619-00-0-1
	Drilling jig for additional lockings, horizontal and vertical	1	6-27631-00-0-1

Drilling jigs – vertical and corner gears

Application	Description	PU	Article No.
	Drilling jigs		
Articulated crank rod	Drilling jig for crank rod	1	6-22276-00-0-0
Corner gears	Drilling jig for corner gears – VENTUS F 200		
	Drilling Ø 3,0 mm	1	6-25841-02-0-0
	Drilling Ø 3,5 mm	1	6-25841-03-0-0
	Drilling jig for corner gears – VENTUS F 300	1	6-27352-00-0-0

Test cable and test equipment for electric drives ELTRAL

Application	Description	PU	Article No.
Electric drives ELTRAL S	**Test cable, complete** for ELTRAL S 230 L, ELTRAL S 230 E	1	6-26338-00-0-0
Electric drives ELTRAL	**Test equipment for electric drive 230 V, 24 V** for ELTRAL S 230 L, S 230 E, S 24 L ELTRAL 300 E1, 300/24 for chain drives ELTRAL K for spindle drives ELTRAL S for rack and pinion drives ELTRAL Z	1	K-17736-00-0-0

Order catalogue part 7
Miscellaneous fittings

Contents

The present catalogue part contains miscellaneous fittings for aluminium tilt windows and top hung windows according to the latest state of the art.

The following indications will make you familiar with the concept of the catalogue and help you to handle it easily.

Catalogue structure

The present catalogue part is structured in the following way:
– Optional parts
– Single parts

Single parts

This part of the catalogue shows packing units and their contents, all single parts and accessories as well as auxiliary tools. Information on application, colours and packing units makes ordering easy.

Order numbers

The order number gives information about
– the article
– its size
– its application - e.g. DIN lh or DIN rh
– its colour/finish

Example
Order number
6-23470-10-0-1

6-24841- - -	Article number
- -10- -	Size
- - -L-	Left hand assembly
- - -R-	Right hand assembly
- - -0-	Usable on both sides
- - - -1	F 1/EV 1, natural (silver colour), fer**GU**ard*silver
- - - -2	F 2/EV 2, champagne colour
- - - -3	F 3, brass colour or gold colour
- - - -4	UC 3, middle bronze or middle brown
- - - -A	F 4, bronze or bronze colour
- - - -C	titan colour
- - - -5	UC 5, dark bronze or dark brown
- - - -6	Onyx matt or black (RAL 9005)
- - - -7	White (RAL 9016)
- - - -7T	White (RAL 9010)
- - - -8	Stainless steel or stainless steel colour
- - - -*	Surface treatment variable (available colours see price list)

Prices

Single part price list "Total programme"
The prices are listed by ascending article numbers.

Additional sales documentation

Apart from the order catalogue, the following documentation on miscellaneous fittings is available:
– Brochures and leaflets informing about product features and advantages
– Assembly drawings with mounting instructions

Miscellaneous fittings for tilt and top hung windows

Application

Range of applications for G.U miscellaneous window fittings:
- Security stays for tilt windows
- Rebate stays for tilt windows
- Restrictor stay for top hung outward opening windows
- Fan-light catch for windows

Designs

G.U security stay EURO-SOLID
These stays for holding the opened sash offer additional safety of operation. The Institute for Window Techniques, Rosenheim, highly recommends the use of security stays for tilt sashes.
The G.U security stay EURO-SOLID is a one piece telescopic construction. There are 4 stay sizes for various sash heights. The stay types for aluminium sashes are profile-related.

G.U security stay EURO-SOLID – maximum sash weights
Maximum sash weights according to size and quantity of stays

SH F 200/F 300	Size	1 stay	2 stays
270- 350	01	15 kg	30 kg
351- 500	02	15 kg	30 kg
501- 800	03	30 kg	60 kg
801-1500	04	30 kg	60 kg

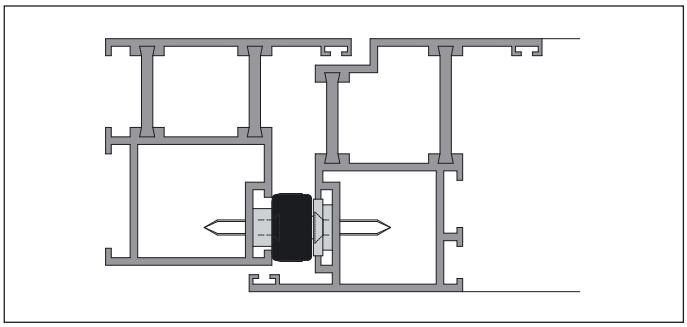

Installation of G.U security stay EURO-SOLID

Rebate and cleaning stays
These stays for holding the opened sash offer additional safety of operation. The Institute for Window Techniques, Rosenheim, highly recommends the use of rebate stays for tilt sashes.

Restrictor stays
Top hung outward opening sashes are equipped with restrictor stays in order to hold the sashes in open position.

Fan-light catch PERPLEX
The fan-light catch PERPLEX, a simple locking device for tilt sashes, is used for small windows if a fan-light opener is not necessary due to size, weight and easy accessability of the sashes.

Materials, surface sealing fer**GU**ard*silver

The fitting parts are made of high quality steel, zinc die-casting or aluminium alloys.
Depending on the material, they are protected against corrosion by surface sealing with fer**GU**ard*silver or by anodisation (aluminium parts).

Abbreviations

PU	Packing unit
SH	Sash height
SRH	Sash rebate height
SRW	Sash rebate width
ST	Sash thickness
SW	Sash width

Profile system manufacturers' information

It is important to observe the product information issued by the profile system manufacturers, especially information concerning construction and fabrication, maximum sash dimensions and weights and material features such as linear expansion of profiles.

Profile systems with 16 mm fitting groove

Profile manufacturer	Profile system	Sash overlap mm	Groove position mm	Frame groove	Frame groove Dim. A	Frame groove Dim. B
Alco	Alousystem 550	20,0	13,0	14/18	1,5	4,0
Almaco		18,0	9,0	14/18		
Alumil	M 11000 M 11500 M 20000	18,0 18,0 18,0	9,0 9,0 9,0	14/18 14/18 14/18	1,5 1,5 1,5	3,5 3,5 3,5
Aluminco		20,0	9,0	14/18	1,5	3,5
Domal	Bright PA70S	18,0	9,0	14/18	1,5	3,5
Elvial	4300 4600 5400 5600 5700 6700 6800 Optimum	18,0 18,0 18,0 18,0 18,0 18,0 18,0	9,0 9,0 9,0 9,0 9,0 9,0 9,0	14/18 14/18 14/18 14/18 14/18 14/18 14/18	1,5 1,5 1,5 1,5 1,5 1,5 1,5	4,0 4,0 4,0 4,0 4,0 4,0 4,0
Europa	5000	18,0	9,0	14/18	1,5	3,5
Etem	E40	20,0	9,0	14/18	2,0	4,0
Exalco	Albio 109C	18,0	9,0	14/18	1,3	3,9
Heroal	Serie 065, 065i Serie 065f Serie 090, 090 S Serie 110 ES Serie 20, 25	18,0 18,0 18,0 18,0 18,0	9,0 9,0 9,0 9,0 9,0	10/14 10/14 10/14 10/14 10/14	2,0 2,0 2,0 2,0 2,0	4,3 4,3 4,3 4,3 4,3
Kawneer	Kalory	20,0	9,0	10/14		4,0
Nordall	78TTF	18,0	9,0	14/18	1,5	3,5
Ponzio	Windstop 55TT	18,0	9,0	14/18	2,0	4,0
TS-Aluminium	65	18,0	9,0	14/18	2,0	4,0

Separate delivery:
Security stay + bag of accessories according to profile system

G.U security stay EURO-SOLID
without accessories

Application, illustration	Description		PU	Article No.
Tilt windows	**G.U security stay EURO-SOLID**			
	SH F 200/F 300	Opening angle of catch position		
	270- 350	ca. 30°	100	6-27995-01-0-1
	351- 500	ca. 40 – 45°	100	6-27995-02-0-1
	501- 800	ca. 25 – 30°	100	6-27995-03-0-1
	801-1500	ca. 15 – 20°	100	6-27995-04-0-1
	Drilling jig		1	K-14788-00-0-0

G.U security stay EURO-SOLID
Bag of accessories according to profile system

Tilt windows Application, illustration	**Bag of accessories EURO-SOLID** Description	PU	Article No.
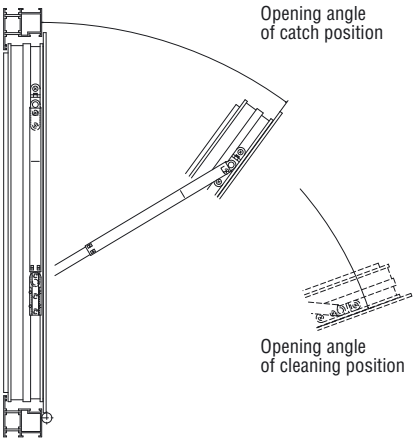	**Profile systems with frame groove 14/18, 12/15, 10/14 and sash groove 15/20 resp. fitting groove 16 mm** Akotherm, Alco, Almaco, Alumil, Aluminco Brökelmann Domal Elvial, Erbslöh, Etem, Europa, Exalco Heroal Kawneer, Kubal Menziken Nordall Ponzio Redal, Remy Claeys, Reynolds Sykon Thyssen Schulte, TS-Aluminium VAW	20	K-14686-00-0-1
	Profile systems Hartmann, Hueck MKF TKI Schüco	20	K-14684-00-0-1
	Profile systems Wicona	20	K-14685-00-0-1

Rebate stays and fan-light catches for tilt and top hung windows

Application, illustration	Description	PU	Article No.	
Tilt windows	**Rebate stay no. 23** with articulated arm, length			
 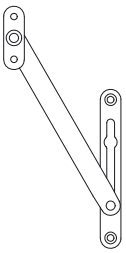 **No. 23** **No. 24**	150	50	5-21020-15-0-1	
	Rebate stay no. 24 with articulated arm, length			
	150	50	5-21021-15-0-1	
	200	50	5-21021-20-0-1	
Tilt windows	**Rebate stay no. 27** with articulated arm, length		Left	Right
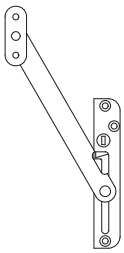 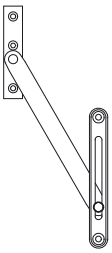 **No. 27** **No. 28 M**	150			
	with HEX Allen key locking device	50	5-20143-00-L-1	5-20143-00-R-1
	lockable with cylinder (without illustration)	40	5-20152-00-L-1	5-20152-00-R-1
	Key for cylinder (without illustration)	1	9-23074-00-0-0	
	Rebate stay no. 28 M with articulated arm, length			
	200	50	5-21041-20-0-1	
Top hung windows	**Restrictor stay no. 32** with articulated arm	50	Left 5-20129-00-L-1	Right 5-20129-00-R-1
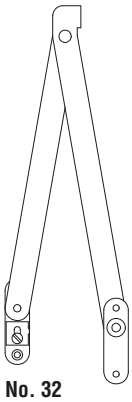 **No. 32**				
	Hexagonal Allen key SW 4 for rebate stays with locking device	1	9-11285-00-0-6	
Tilt windows Sashes with overlap	**Fan-light catch PERPLEX 45** screw-on version	100	5-20833-00-0-1	
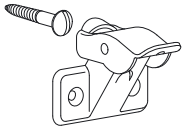 **PERPLEX 45**				
Latch plate 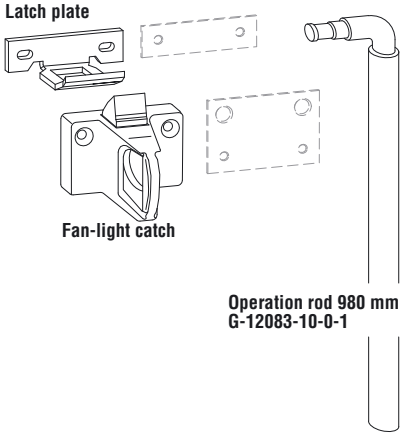 **Fan-light catch** **Operation rod 980 mm G-12083-10-0-1**	**Bag of fan-light catch for 6 mm overlap thickness** [1] screw-on version	20	G-18412-01-0-*	
	Operation rod 980 mm [2]	1	G-12083-10-0-1	
	Packings for bag of fan-light catch [2]			
	Application	Thickness mm		
	Latch plate	0,5	1	E-12084-05-0-1
		1,0	1	E-12084-10-0-1
		3,0	1	E-12084-30-0-1
	Fan-light catch	0,5	1	E-12071-05-0-1
		1,0	1	E-12071-10-0-1
		3,0	1	E-12071-30-0-1

[1] * = Colour: 1 = EV 1, 6 = black, 7 = white (RAL 9016) [2] Not embodied in the bag of fan-light catch.

Product group

J	**Ventilators for windows**
K	**Sound absorbing ventilators**

Flap ventilators, rotating drum ventilators and sound absorbing ventilators for timber, PVC and aluminium windows

Flap ventilators and rotating drum ventilators

Sound absorbing ventilators

The following pages represent an excerpt of the order catalogue

Ventilators for windows, Sound absorbing ventilators

Please ask for this catalogue containing the complete DUCO range of ventilators if required.

DUCO ventilators …

… the complete programme for energy saving ventilation

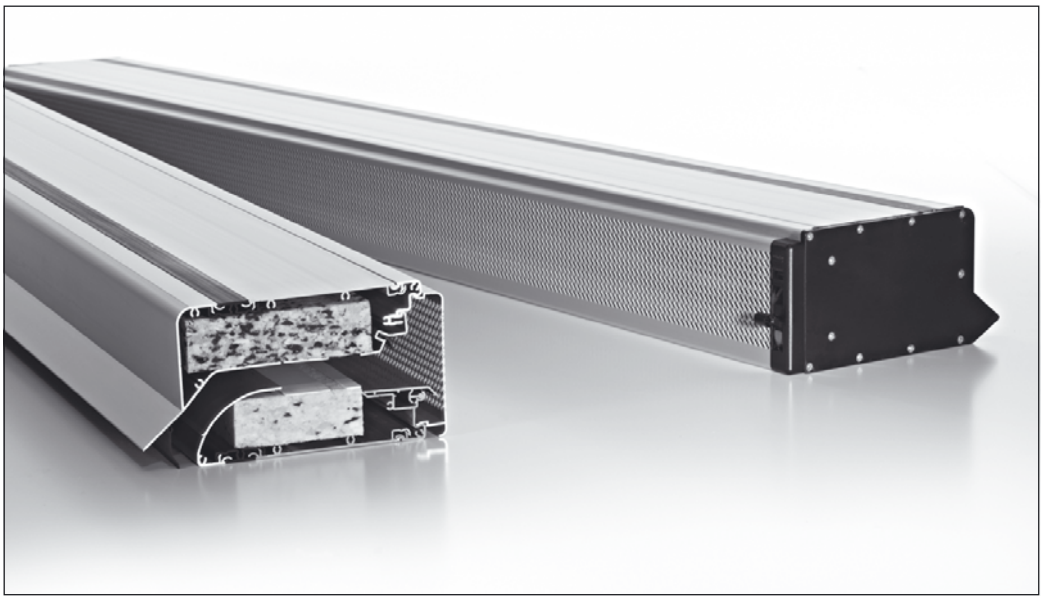

New:

– Cutting to size
– Assembly
– Special RAL colours

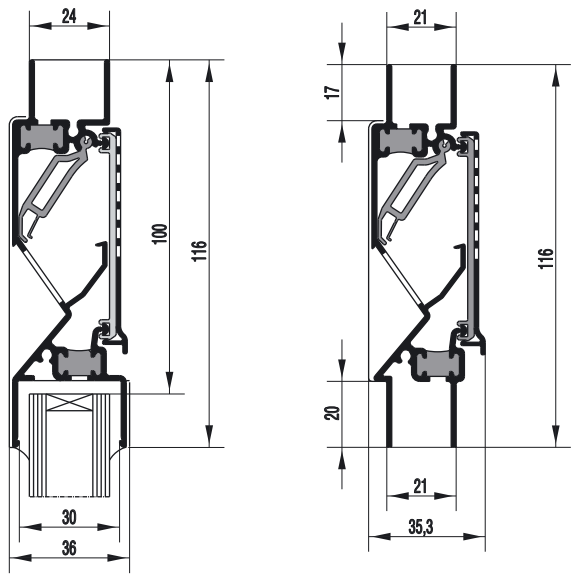

Installation in glazing rebate Installation in frame

Advantages:

- ✓ Simple installation
- ✓ Draught-free flow of incoming air over total length of ventilator
- ✓ Excellent thermal break
- ✓ High impermeability of joints and protection against driving rain thanks to gasket or finseal brush
- ✓ Reliable protection against insects
- ✓ Plastic end caps with integrated control elements
- ✓ Easy operation – alternatively by hand lever, linkage or cord

Installation variants:

- ❑ Horizontal installation in the glazing rebate at bottom or top of glazing
- ❑ Vertical or horizontal installation in the frame for timber, PVC or aluminium windows

Ventilators for the installation in the glazing rebate and in the frame

Flap ventilator DUCOFLAT 100

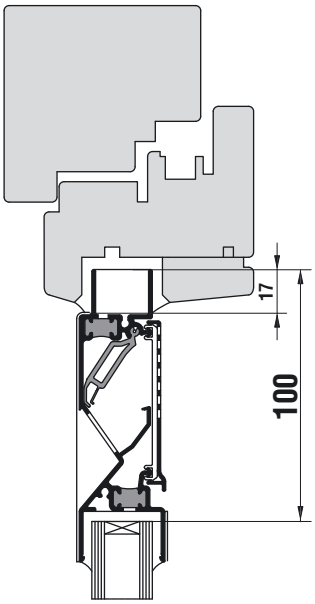

Technical data

Glass reduction 100 mm

Installation in glazing rebate

Direction	horizontal
Connection to glazing	at bottom at top at side
Glass thickness	20 mm 24 mm 28 mm [1]

Installation in frame

Direction	horizontal
Air flow	62 m³/h . m

Pressure differential 2 Pa

Max. length 2.500 mm
of installed ventilator

Seal
Plastic flap with gasket

Insect screen
Inside grille, punched, detachable for cleaning

[1] = only connection to glazing at bottom

Flap ventilator DUCOFLAT 80

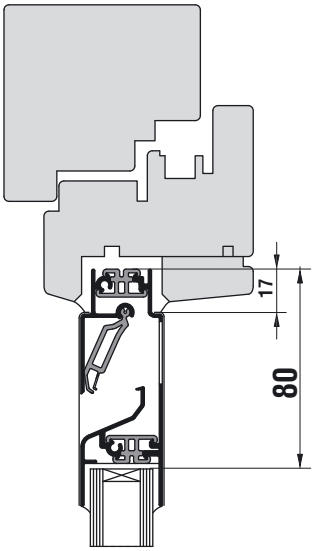

Technical data

Glass reduction 80 mm

Installation in glazing rebate

Direction	horizontal
Connection to glazing	at bottom at top
Glass thickness	20 mm 24 mm 28 mm

Installation in frame

Direction	horizontal
Air flow	57 m³/h . m

Pressure differential 2 Pa

Max. length 2.500 mm
of installed ventilator

Seal
Plastic flap with gasket

Insect screen
Inside grille, slotted

Ventilators for the installation in the glazing rebate

Rotating drum ventilator DUCOTON 80 (ZR)

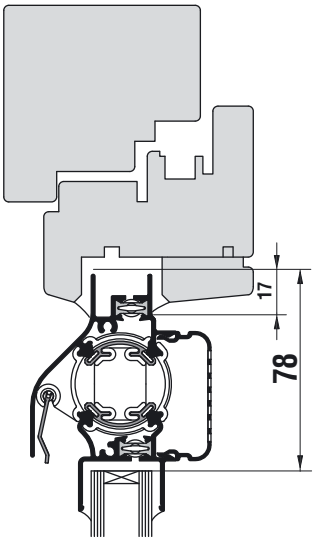

Technical data

Glass reduction 80 mm

ZR = self-regulating ventilation flap

Installation in glazing rebate

Direction	horizontal
Connection to glazing	at bottom
Glass thickness	20 mm 24 mm 28 mm 32 mm
Airflow	50 m³/h . m

Pressure differential 2 Pa

Max. length 2.500 mm
of installed ventilator

Seal
Rotating drum with 4 finseal brushes

Insect screen
Inside grille, punched, detachable for cleaning

Flap ventilator DUCOPLUS 60

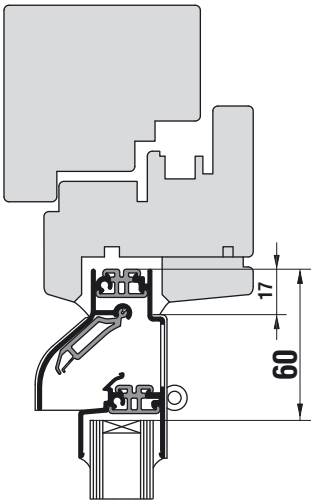

Technical data

Glass reduction 60 mm

Installation in glazing rebate

Direction	horizontal
Connection to glazing	at bottom
Glass thickness	20 mm 24 mm 28 mm 32 mm
Airflow	70 m³/h . m

Pressure differential 2 Pa

Max. length 2.500 mm
of installed ventilator

Seal
Plastic flap with gasket

Insect screen
Inside grille, slotted

Flap ventilators and rotating drum ventilators with thermal break

Operation methods

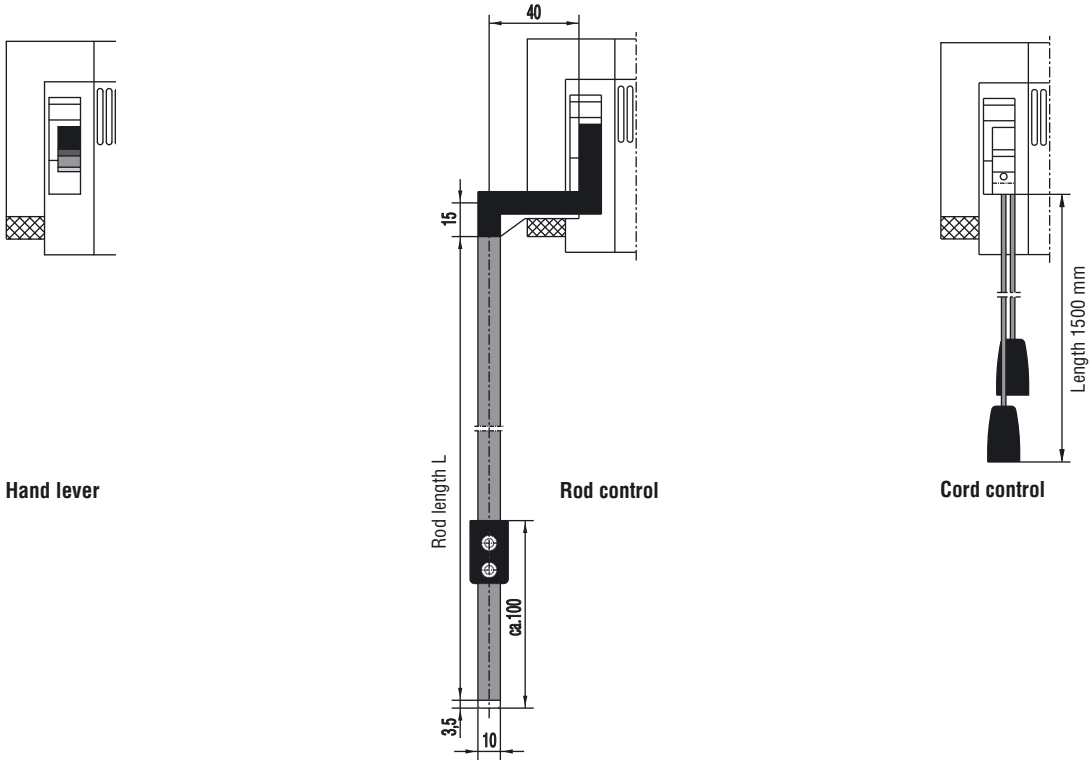

Designs

Standard colours

Colour EV 1
- Aluminium parts anodized in natural tone
- End caps black

White
- Aluminium parts with white lacquer finish (RAL 9016)
- End caps white (RAL 9016)

Cream white
- Aluminium parts with cream white lacquer finish (RAL 9001)
- End caps cream white (RAL 9001)

RAL special colours for cut to measure ventilators

DUCO ventilators cut to measure are also delivered in many special RAL colours:
- same colour inside and outside
- different colours inside and outside
- rod in special colours
- paint applied: Original Glasurit 2-part paint series 22

Cut to measure

When the ventilators are ordered cut to measure delivery comprises the following services:
- cutting the ventilator to measure
- assembly of end pieces on both sides
- with ventilator lengths from 1250 mm assembly of the intermediate piece
- cutting the glazing gasket to measure
- with rod control: cutting the rod, assembly of lever and end plug

Installation

The ventilators are fixed with glazing beads. Sealing is effected with silicone-based material or with gaskets.

Profile system manufacturers' information

It is important to observe the product information issued by the profile system manufacturers, especially information concerning construction and fabrication, maximum sash dimensions and weights and material features such as linear expansion of profiles.

Noiseless ventilation with windows closed

Living and working in healthy and quiet rooms

With noise pollution increasing, the installation of soundproof windows and sound absorbing ventilators is the best way to restore silence and improve the quality of life in the long run. Soundproof windows damp the noise, sound absorbing ventilators provide the room with fresh air with windows closed. Soundproof windows fitted with DUCO sound absorbing ventilators at the same time provide quiet and fresh air.

Efficient noise protection for new and old buildings

On buildings located on streets, railroads or near airports, outside noise values of over 70 dB (A) can be measured.
According to directive 2719 of the Association of German Engineers (VDI), however, the interior noise level in bedrooms, e.g., should not exceed 25 - 30 dB (A) to allow for undisturbed sleep. Such noise reduction is only possible by means of soundproof windows and sound absorbing ventilators.
DUCO sound absorbing ventilators corresponding to sound insulation grade 3 (to EN 356) with a Dne,A coefficient of up to 51,5 dB (A) meet the highest requirements with regard to noise protection and constitute an economic solution to new and old buildings.

Heat insulation

The thermally broken DUCO sound absorbing ventilators provide optimum heat protection.

Efficient air exchange

Every person needs 20 m³ fresh air per hour for his or her well-being. For smoking rooms the value is determined at 30 m³. At a pressure differential of 2 Pa, DUCO sound absorbing ventilators perform an air flow of up to 45 m³/h per m length.
Ventilation is effected evenly over the whole length of the unit, rooms stay draught-free and comfortable.

Product description DUCOMAX

The sound absorbing ventilators are made from extruded aluminium profiles with the cover grid coming in three different designs:

- BudgetLine
- SoftLine
- LamelloLine

None of the grid variants affects the air flow or the sound absorbing effect of the unit. The ventilating performance is equally good with all three designs.

With the DUCOMAX type, G.U offers a new generation of innovative sound absorbing ventilators distinguishing themselves not only by their appealing Duco design but also by outstanding acoustic and ventilating qualities.

Working in fresh air and quiet

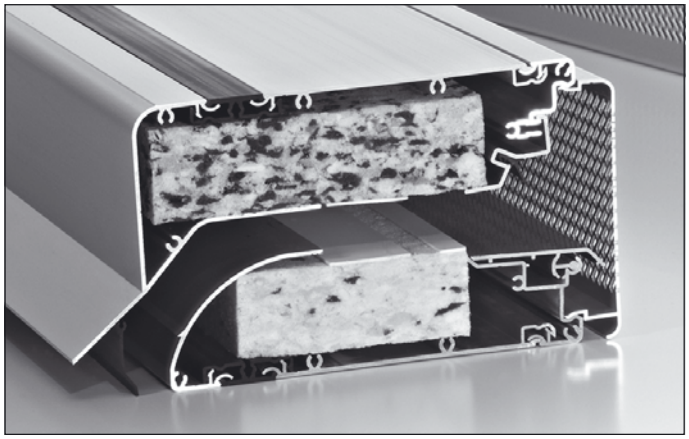

Sound absorbing ventilator DUCOMAX – grid profile BudgetLine

Easy installation

DUCO sound absorbing ventilators are delivered as complete units ready for installation. The window fabricator fits the ventilators in the glazing rebate, in the frame rebate or above the frame of timber, PVC or aluminium windows.

DUCO-Silenzio

- 3 design variants with different ventilation performance
- Installation in exterior walls with heat insulated Ø 200 or 250 mm tube.
- Sound absorption Dne,A up to 48 dB (A) – sound insulation grade 3
- Stepless adjustment of air flow by means of rotating drum with cord control
- Easy cleaning thanks to removable inside grid.
- Exterior and interior hood of aluminium, EV-1 anodised or powder coated.

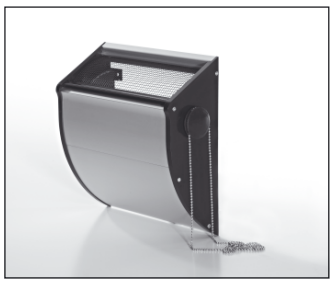

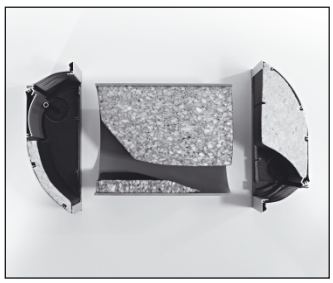

Features and advantages, DUCOMAX types

Features and advantages

- One sound absorbing ventilator – three design variants: "BudgetLine", "SoftLine" and "LamelloLine"
- Large air flow and outstanding sound insulation values
- Perfect tightness against wind and water
- Proof against driving rain up to 650 Pa test pressure
- Thermal break for optimum heat insulation
- Reinforcing webs in the ventilator provide stability
- Die-cast end caps allow for fast assembly
- Antiallergic absorption materials
- Two coloured variants available
- Easily removable inside grid serving as insect screen
- Operation by hand lever, linkage or cord
- Open/closed indication (green/red)
- Four installations depths
  – Corto
  – Medio
  – Alto
  – Largo
- Suitable for installation in timber, PVC and aluminium windows
- Installation in the glazing rebate, in the frame rebate or above the frame.

DUCOMAX types

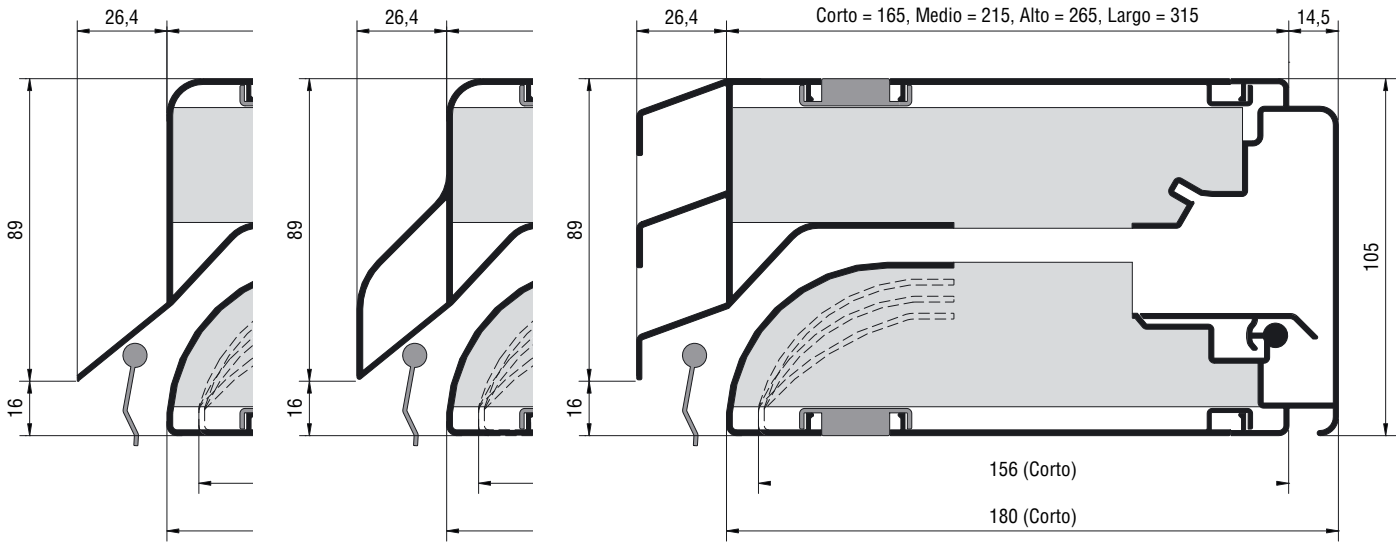

DUCOMAX – BudgetLine **DUCOMAX – SoftLine** **DUCOMAX – LamelloLine**

Product group

I Heat and smoke exhaust installations (RWA)

Heat and smoke exhaust (RWA) installations

The following pages represent an excerpt of the order catalogue

Heat and smoke exhaust installations

Please ask for this catalogue containing the complete G.U range of RWA products.

General information: RWA – functional principle and tasks

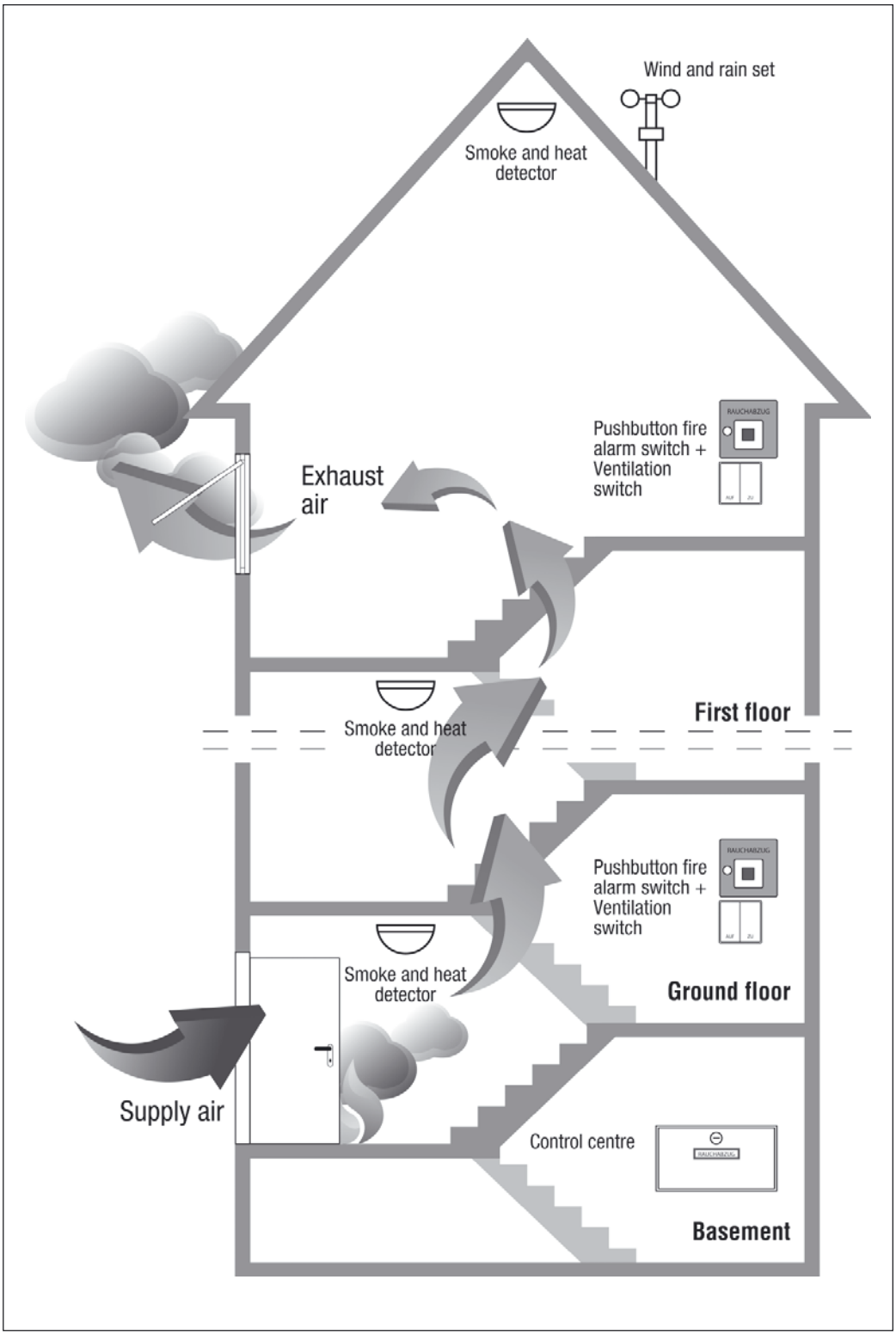

Smoke and heat exhaust systems (RWA) protect people, buildings, interiors and valuable merchandise against the effects of heat and toxic fire gases.

Functional principle

In the process of combustion, smoke, heat and hot fire gases are produced which rise in the room due to thermal lift and form a layer of smoke and fire gases under the ceiling.

With the fire proceeding, this smoke layer becomes more and more dense, and within a short period of time the total room is filled by it.

With electromotive drives of G.U-BKS, an almost immediate opening of RWA apertures in the upper area of a building is achieved (and also of supply air apertures, if required), provided smoke detectors are installed. As a result, combustion products can exhaust as soon as they are produced.

Supply air apertures in the lower part of a building ensure the necessary balance of the mass flow and increase the effect of thermal lift.

Tasks of a RWA installations

In the event of a fire, RWA installations exhaust smoke and heat. They

- keep escape and rescue routes nearly free of smoke and therefore passable.
- provide clear sight, thus facilitating the fire fighting.
- restrict or completely prevent the spread of fire.
- protect the building, interior furnishings and stored material against unnecessary secondary damage.
- restrict the formation of fire gases and possible subsequent chemical reactions
- provide fresh air daily in ventilation mode.

Component diagram

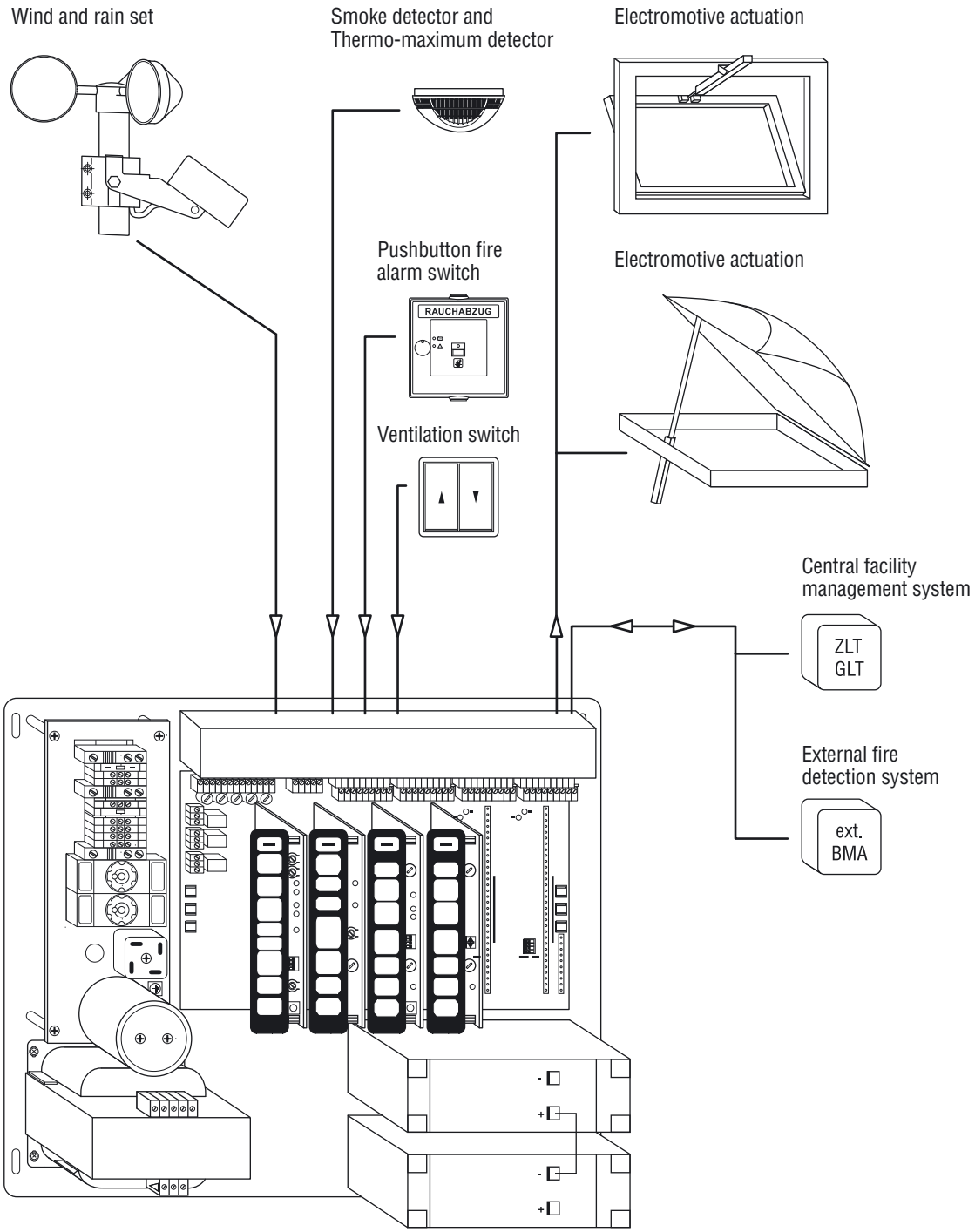

RWA Control centres RZ

Description	RZ 2	RZ 5	RZ 10/2	RZ 24/4	RZ 24/8
Output in A	2	5	10	24	24
Dimensions in mm (width x height x depth)	350x250x120	350x250x120	500x500x200	600x600x250	800x800x250
Max. number of RWA groups	1	1	up to 2	up to 4	up to 8
Max. ventilation groups	1	1	up to 2	up to 4	up to 8

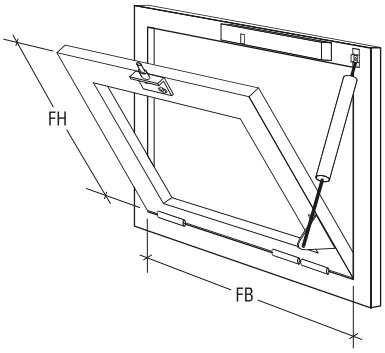

Opening system RWA 1000

for top, bottom or side hung windows opening inward
Sash width, timber and aluminium windows 450-1300 mm
Sash width, PVC windows 450-1000 mm

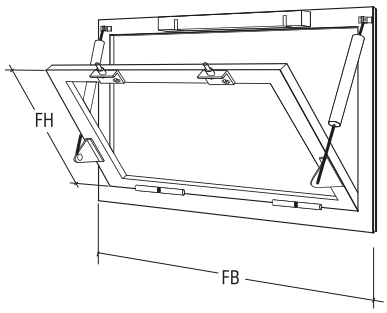

Opening system RWA 1000 S-SET

for top, bottom or side hung windows opening inward
Sash width, timber and aluminium windows 450-3000 mm
Sash width, PVC windows 450-1600 mm

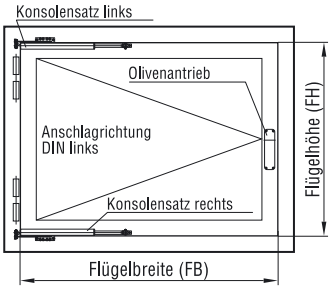

Opening system RWA 1050

with lever handle ELTRAL OA
with integral closing sequence control
for side hung windows opening inward
Solo Max. sash height 1500 mm
Tandem Max. sash height 2500 mm

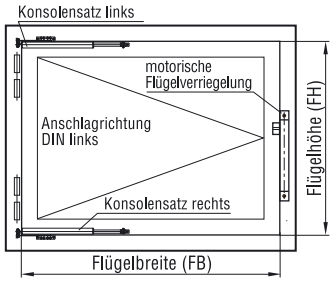

Opening system RWA 1050

with electomotive sash locking ELTRAL VA
with integral closing sequence control
for side hung windows opening inward
Solo sash height 450-1300 mm
Tandem sash height 1200-2300 mm

Chain drives ELTRAL K

for top, bottom or side hung windows and roof-lights opening inward
for individual and synchronised use,
surface or concealed mounting

Chain drives ELTRAL	K 20*	K 25*	K 60
Push/pull force (N)	200	250	600
Opening widths (mm)	200/300/400	200/300/400/600	250-1000
Current consumption 24 V (A)	1,0	1,0	1,2
Min. sash height (mm) (depending on stroke) top/bottom hung window	400	400	200 (with stroke 250)
Dimensions (WxHxD in mm)	335x26x40	335x26x40	461x40x56 (with stroke 250)

* Not for roof-lights

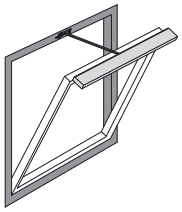

Chain drive ELTRAL K
Solo – on bottom hung sash opening inward

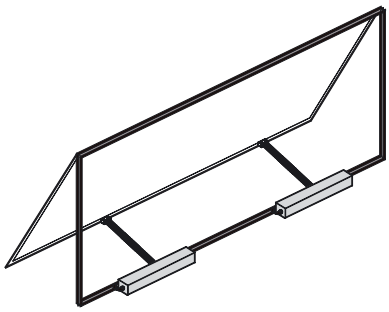

Chain drives ELTRAL K
Tandem – on top hung sash opening outward

Spindle drives ELTRAL S

for top or bottom hung windows and roof-lights opening in- and outward
for individual and synchronised use

Spindle drives ELTRAL	S 80	S 160
Push/pull force (N)	800*	1600*
Opening widths (mm)	300 – 1000	300 - 1000
Current consumption 24V (A)	1,4	1,2
Dimensions (WxHxD in mm)	(302+stroke)xØ36	(302+stroke)xØ36

* Observe load-displacement diagram

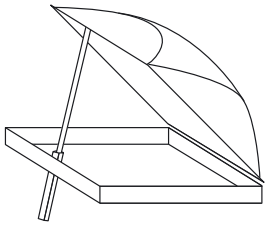

Spindle drive ELTRAL S
on roof-light

Product programme

Tilt-Turn Fitting System UNI-JET

Fittings for single and double sash windows and patio doors made of timber, PVC and aluminium – suitable for manual and automatised hardware assembly in any window fabrication facility.

- Comprehensive product range:
  Tilt-turn, tilt only, first tilt, and side hung fittings, also for round arch head and oblique angle head windows; all available in standard version or in tested /untested security grades
- Advantages:
  – automatic mushroom locking pins
  – central locking mechanism from standard (basic) security up to WK 2
  – tilt-turn stays with integral slit ventilation
- All fittings with surface sealing ferGUard*silver
- Sash components with clip connection

Technical details, fitting variants			
Fitting variants	Sash width mm	Sash height mm	Sash weight kg
Timber or PVC			
UNI-JET M, UNI-JET S	280-1600	350-2450	up to 130
UNI-JET D	280-1600	350-2450	up to 100
UNI-JET S-CONTURA	280-1600	350-2350	up to 130
UNI-JET S-CONCEALED	400-1400	350-2450	up to 130
Aluminium			
JET AK 8	355-1700	500-2400	up to 130
UNI-JET C	280-1600	350-2450	80 / 130 optional
UNI-JET D	280-1600	350-2450	up to 100

Parallel Slide and Tilt Fittings

Fittings for parallel slide and tilt units with 2 - 4 sashes.

- One handle operation, stays with forced control (mZ)
- Up to 200 kg sash weight without additional runner
- Designed for sash rebate widths up to 2000 mm (from SRW 1.850 mm with 3rd stay)
- Sashes in tilt position secured against being pushed open
- Multi-level security concept
- Wrong operation safety device

Technical details, fitting variants			
Fitting variants	Sash width mm	Sash height mm	Sash weight kg
Timber and PVC			
G.U-966/200 mZ	720-2000	820-2370	up to 200
G.U-966/150 mZ	720-1600	820-2370	up to 150
G.U-966/150 oZ	640-1600	700-2350	up to 130
G.U-90 oZ	640-1600	700-2350	up to 90
Aluminium			
G.U-968/200 mZ	740-2000	895-2400	up to 200
G.U-968/150 mZ	740-1600	895-2400	up to 150
G.U-968/150 oZ	600-1600	730-2400	up to 130
G.U-90 oZ	600-1600	730-2400	up to 90

Lift-Slide Fitting Range, HS-*Master* and HS-*Master* CONCEALED

Fittings with one handle operation for units with 2 to 6 sashes.

- Extended application range of lift-locking gear for sash heights up to 2.765 mm
- Newly engineered runners allow the sliding sashes to run more smoothly and quietly than ever before
- Security package for all lift-slide units
- **HS slit ventilation module –** convenient room aeration and enhanced burglar protection (WK2-tested)
- HS-*Master* – operating convenience due to motor driven lift and slide
- HS-*Master* CONCEALED – operating convenience due to motor driven lift and slide, plus the extra benefit of sophisticated design : the drive unit is integrated in the frame profile
- All fittings with surface sealing ferGUard*silver
- Threshold G.U-thermostep, G.U-threshold 47, G.U-flatstep, G.U-timberstep
- HS-*Speed Limiter* (mechanical safety component) prevents the sash from accelerating its movement

Technical details, fitting variants			
Fitting variants	Sash width mm	Sash height mm	Sash weight kg
Timber, PVC and aluminium			
HS G.U-934	700-3300	850-2765	up to 300*
HS G.U-937	700-2200	850-2765	up to 150
HS-*Master*	min. SW 950-3300	up to -2765	up to 300
HS-*Master* CONCEALED	min. SW 1200-3300	1840-2765	up to 300

* Special 400 kg / 600 kg variants

Slide-Fold Fittings

Fittings for slide-fold units with 3 - 7 sashes.

- 2-wheel runners, bottom running (G.U-922, G.U-822) or top running (G.U-925, G.U-825)
- Vertical adjustment as well as sash overlap and gasket pressure adjustment on runners, horizontal adjustment on sash hinges
- All fittings with surface sealing ferGUard*silver

Technical details, fitting variants			
Fitting variants	Sash width mm	Sash height mm	Sash weight kg
Timber and PVC			
G.U-922	400-900	850-2450	up to 80
G.U-925	400-900	850-2350	up to 80
Aluminium			
G.U-822	400-1000	730-2400	up to 80
G.U-825	400-1000	730-2400	up to 80

Horizontal and Vertical Pivot Fittings

Fittings for horizontal and vertical pivot windows with peripheral gasket:

- A hardware system which has proven its value for decades; suitable for sash weights up to 300 kg
- Vertical pivot fittings can be pivoted centrally or eccentrically

Technical details, fitting variants			
Fitting variants	Sash width mm	Sash height mm	Sash weight kg
Horizontal pivot fittings – timber			
UNITAS 5 Bo, 7 Bo	576-2950	700-2200	up to 175
UNITAS 10/22°	576-2950	700-2200	up to 300
UNITAS 4 (circular window)	424-2016 Ø		up to 100
FERCO 44 E	576-1450	700-2000	up to 80
FERCO 45 E	576-1450	700-2200	up to 120
Horizontal pivot fittings – PVC			
UNITAS 15, 16	576-2950	700-2200	up to 175
Horizontal pivot fittings – aluminium			
UNITAS 18	580-	600-	up to 175
Vertical pivot fittings			
UNITAS 93 Bo (timber)	782-1600	1250-2350	up to 175
UNITAS 88 (aluminium)	600-	600-	up to 175

DUCO Ventilators
Flap ventilators, rotating drum ventilators and sound-absorbing ventilators

Ventilators manufactured from extruded aluminium profiles for adjustable, energy saving and sound reducing ventilation (available up to sound absorption class 4).

- Thermally broken flap or rotating drum ventilators with sealing lips or finseal brushes
- Controlled via lever, rod or cord
- Max. length of ventilator: 3000 mm
- Installation in the frame or glazing rebate of timber, PVC and aluminium windows
- Tightness against driving rain up to 650 Pa

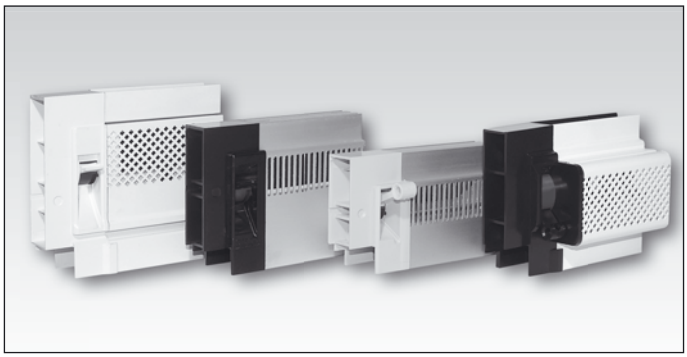

Technical data of ventilators										
Description	G.U - DucoFlat						DucoPlus 60 GF	DucoTon 80 GF	DucoMax	Silenzio 200 Uno
	80 GFO	80 GF	80 BF	100 GFO	100 GF/GFS	100 BF				
Application / Features	Flap ventilators						Flap ventilator	Rotating drum ventilator	Sound absor-bing ventilator	Sound absor-bing ventilator
Installation in frame			X			X			X	
Installation on frame										
Installation in glass rebate	X	X		X	X		X	X	X	
Installation on masonry										X
Glass reduction (mm)	90	80		100	100		60	80	135	
Glass thickness (mm)	20,24,28	20,24,28		20,24	20,24,28		20,24,28,32	20,24,28,32	20-42	
Installation thickness (mm)			20,24			21				
Connection to glazing at bottom		X			X		X	X	X	
Connection to glazing at top	X			X						
Connection to glazing on side					X					
Airflow rate (m³/h) at 2 Pa	56,5			61,6			69,5	50	56,5 - 163,1	35,2
Sound reduction factor (open) Dne,A (dB)	27,3			26,7			27,2	26,1	33 - 45,7	43,1
Sound reduction factor (closed) Dne,A (dB)	44,8			41,7			44,3	31,9		45,8

Fan-Light Openers

Slimline fan-light opener with face-fixed stays for tilt (bottom hung inward opening) units with one or more sashes.

- Vertical and horizontal rods covered with aluminium profile
- Operation via lever handle, vertical gear or corner gear. Electric drives for individual or group control
- Fittings for rectangular, oblique angle head, arch head and segmental arch head tilt windows, also in enhanced security ("Se") version
- Fittings for top hung outward opening windows
- Secure hold of tilt sashes with the opening stay disengaged (e.g. for window cleaning) by means of G.U security stay EURO-SOLID

Technical details, fitting variants			
Fitting variants	Sash width mm	Sash height mm	Opening width mm
Timber, PVC and aluminium			
VENTUS F 200	400-3600	from 250	165 / 200 *
VENTUS F 300	620-3600	from 350	220 / 300 *

* factory setting

Smoke and Heat Exhaust (RWA) Systems

Wherever utmost reliabilty and fast evacuation of smoke gases are demanded from a smoke exhaust installation in case of fire, RWA systems provide for safe, automatic opening of smoke exhaust apertures.

Advantages of RWA systems:

- Enable assisted and unassisted rescue in case of a fire emergency
- Provide for automatic ventilation
- Can easily be fit into window or façade assemblies and integrated in facility management systems

Comprehensive product range consisting of:

- Spindle drives, rack and pinion drives, and chain drives
- Locking drives
- Opening and locking hardware
- Compact and modular control centres
- Accessories: push buttons, smoke and heat detectors (differential), rain and wind sensors

Accessories for Builder‘s Hardware

for timber, PVC and aluminium windows and doors

Our well-assorted accessory range comprises modern high-quality products made from industry-leading manufacturers.

- Building chemicals
- Gaskets
- Window hinges
- Insect screens
- Fixing materials
- Glazing tools
- Door hinges
- Electric door openers

Multipoint Door Locks

Multipoint door lock ranges G.U-SECURY and SECURY-EUROPA for burglary-inhibiting main and secondary entrance doors of timber, PVC or aluminium, and for house and flat entrance doors with timber and steel frames.

- Safety door locks for burglary-inhibiting doors – WK 2 and WK 3 tested, VdS tested to class A
- Handle-operated lock types (SECURY-EUROPA) with manual locking; key-operated lock types (G.U-SECURY) with manual, motor-driven or mechanical-automatic locking
- All deadbolt and latchbolt variants are secured against being pushed back
- All locking elements throw at least 20 mm and securely engage into strike plates or into a locking rod over the entire height of the door
- Panic functions
- Backsets from 25 to 90 mm, centres from 70 to 94 mm, spindle from 7 to 10 mm
- Available in various forend widths and forend lengths

Aluminium Floor Thresholds with Thermal Break

for all house entrance doors and tilt-turn patio doors of timber and PVC, suitable both for new buildings and renovation.

Thermally broken thresholds considerably reduce the heat flow at the bottom of glazed doors.

The importance of thermal break:

With normal interior air conditions (interior temperature + 20° C, relative air humidity 50 %), condensate forms with a surface temperature of approximately + 9.2° C (dew point temperature).

With normal outside temperatures (down to – 10° C in winter), the efficient thermal break of G.U thresholds achieves a surface temperature clearly higher than + 9,2° C. The formation of condensate is prevented, the bottom area of the door will not suffer from moisture, a sound building structure will be protected and preserved.

Applications:

The threshold programme offers variants for

- New buildings and renovation
- House entrance and patio doors of timber and PVC
- Barrier-free living to DIN 18025.
- Versatile accessories providing solutions for complicated installation conditions
- Threshold-to-frame connectors for all current profiles

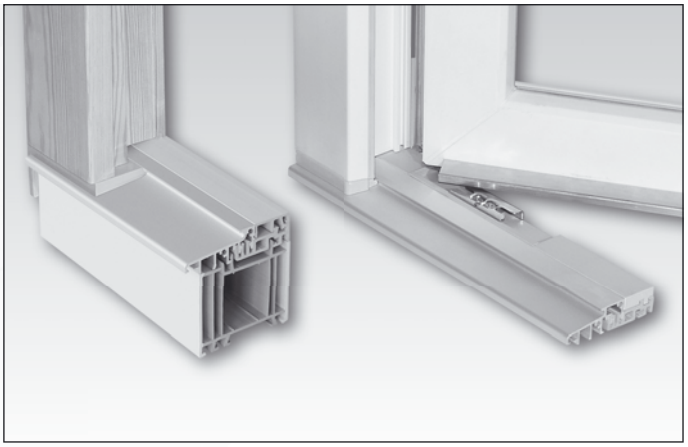

Mortise Locks

Standard locks

- DIN standard locks for timber, steel and narrow stile house or flat entrance doors, and internal doors

Heavy duty locks

- For all kinds of project doors – heavy duty locks class 5 are designed for the use on highly frequented doors

Self-locking locks Series 21 for timber and steel doors, Series 19 for narrow stile doors

- 2 point locking with Automatic latchbolts
- Suitability: from standard entrance doors up to sophisticated escape doors

Electro-clutch (EK) panic locks Series 21 for timber and steel doors, Series 19 for narrow stile doors

- approved for VDS class C
- for single and double leaf doors
- multipoint locking for timber and steel doors

Self-locking motor locks Series 19 for narrow stile doors

- For single and double leaf doors
- Suitable for use in the context of access control and barrier-free construction, or in connection with a swing door drive.

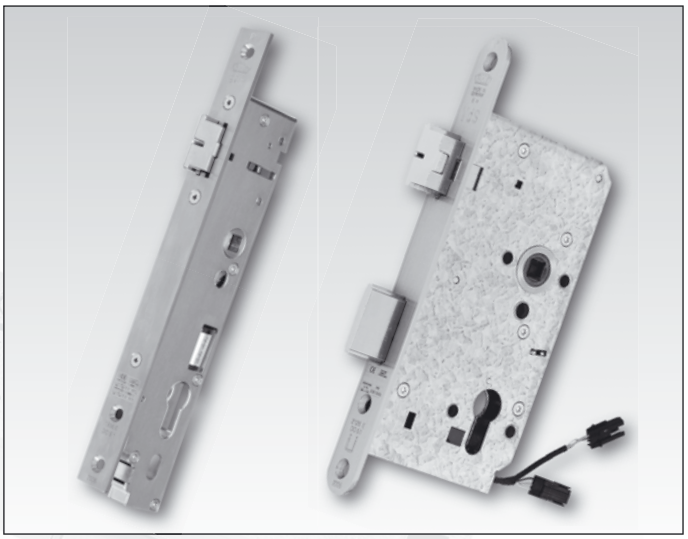

Espace Door Systems to EN 179 and EN 1125

Panic locks and latch plates

- for single and double leaf door units

Multipoint safety door locks SECURY Series 21 for timber and steel doors, and SECURY Series 19 for narrow stile doors

- 3-point locking with three latchbolts
- For use on burglary protection doors and escape doors; for single and double leaf units.

Self-locking lock Series 21 for timber and steel doors, Series 19 for narrow stile doors

- 2-point locking with Automatic latchbolts
- Suitability: from standard entrance doors up to sophisticated escape doors

Narrow stile lock Series 18

- Approved for standard narrow stile, fire protection and smoke protection doors
- Choice of escape door functions for various requirements on single and double leaf narrow stile doors

Panic lock Series 23

- For timber and steel doors. For various requirements on single and double leaf fire protection, smoke protection and escape doors

Push bars, touch bars, door fittings

- For single and double leaf door units

Locking Cylinders and Master Key Systems

Cylinder Series 88

- Conventional profile cylinders for single differ and keyed alike applications

Cylinder Series 31

- Profile, round and special type cylinders for all locking applications and types of master key suites.

Cylinder Series 33 SL

- Security cylinder with additional locking members; within master key suites combinable with series 31.

Cylinder Series 45 janus
(reversible key system)

- Security cylinder for registered differ and complex master key systems.
- Variable cylinder length (Sandwich design)

Cylinder Series 50
(reversible key system)

- Profile cylinder for single differ, keyed alike locking, registered differ and all suited applications.

Cylinder Series 51 SL
(reversible key system)

- Security cylinder with additional locking members; within master key suites combinable with series 50

Master key system variants

- Central locking system for multifamily residendes
- Master key system for minor office or factory buildings
- Grand master key system for large buildings

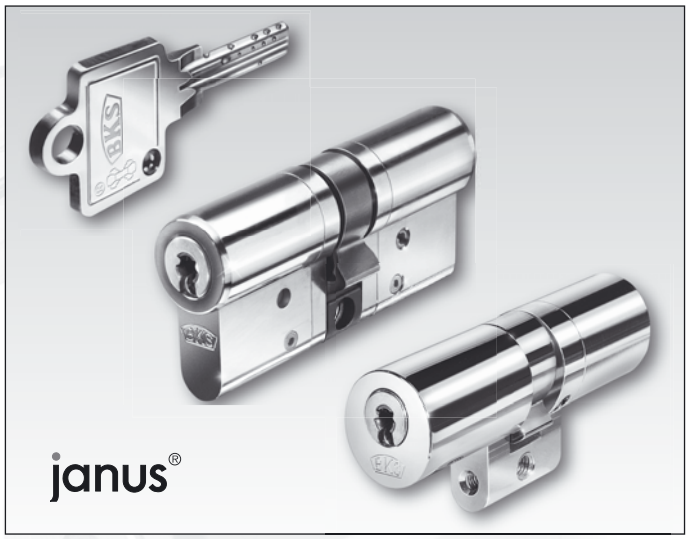

Mechatronic Locking System SE

- Cost-efficient solutions thanks to the combined use of mechanic, mechatronic and electronic lockins systems within one master key suite
- One common transponder key for all SE products
- Identical, easy programming of all components with one programming device

Electronic cylinder janus® SE

- Low-cost integration in janus® master key suites (also retrofitting)
- Suitable for escape doors
- Twofold security thanks to mechanic and electronic verification of access authorisations

Double cylinder SE with turn knob

- Combination with/retrofitting of all master key suites of Series 31, 33, janus® and also of external master key suites possible
- Aesthetic solutions for design-oriented door furnishing (e.g. glass doors)

SE wall reader

- Electric gates, elevators, parking barriers and automatic doors for barrier-free application can be operated with the SE transponder key, just like the cylinders

KeyManager 3.6

- Overall adminstration of mechanic, mechatronic and electronic cylinders and readers
- KeyManager 3.6 allows for the direct programming of SE products
- One user interface for the display and print of mechanic and electronic access authorisations

Door Furniture

Designer furniture

- In stainless steel for sophisticated projects
- Also for private applications – the backplate can be made to your own design and combined with any of our handle models

Push bars and escutcheons

- Push bars in a choice of designs
- Escutcheons with EN certification

Security furniture for narrow stile doors

- Security furniture with EN 1906 certification
- In stainless steel, brass and aluminium

Security furniture

- Complete programme of attractive designs for improved security
- Tested to EN 1906 – protection classes 1, 2, 3, 4 and standard version

Project furniture to EN 1906

- Versatile range of project furniture with choice of handle designs and backplates in a variety of materials

Furniture for internal doors

- In aluminium, stainless steel and brass

Escape door systems to EN 179 and EN 1125

- Door handles and push bars for single and double leaf door units

Hold-Open Systems

Smoke and fire detection accessories for hold-open systems.
In the event of a fire, electrical hold-open devices or holding magnets are disconnected from the mains, thus releasing the door via door closer..

Accessories for hold-open systems:

- Smoke control switch unit BMZ 730 H with integral fire detector
- Wall or ceiling-mounted optical smoke detectors
- Trigger power supply unit for the voltage supply of smoke switch systems
- Manual actuation button, surface or flush mounted
- Door holding magnets, e.g.:
  - standard variant with steel base plate
  - variant with aluminium swivel head
  - floor-mounted variant
- Armature plates

Overhead Door Closers OTS, Floor Springs UTS, Rebate Door Closers

Versatile range of door closers for single and double leaf doors and hold-open systems.
Overhead door closers are suitable for single action swing doors, floor springs are suitable for both single and double action swing doors.

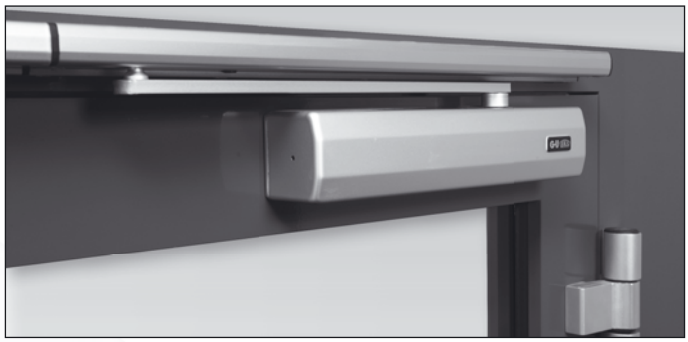

Standard /optional features
(depending on closer type and variant):.

- Integrated door leaf coordination
- Mechanical or electro-mechanical hold-open device
- Interchangeable spindles and spindle extensions

Closer types and technical data

Door closer type	Linkage	Closing force **	for fire and smoke protection doors **
Overhead door closers OTS			
OTS 730	Slide rail	3 - 6	F
OTS 630	Slide rail	2 - 4	-
OTS 633/634	Slide rail	3 / 2 - 4	F
OTS 530	Scissor action arm	2 - 6 / 4 - 7	F
OTS 430, 440/440G	Scissor action arm/Slide rail	2 - 5 / 2	F - / -
OTS 330/210	Scissor action arm	2 / 3 / 4	F / -
OTS 200/200G	Scissor action arm/Slide rail	3 - 4 / 1	-
OTS 140	Scissor action arm	1 / 2 / 3 / 4	-
OTS 80/81	Crank gear	2 - 6 / 3 - 5	- / to DIN 18263, part 1
Rebate door closers			
Rebate door closer 24/20	Concealed installation in the vertical door rebate	2 - 4 / 1 - 2	-

Door closer type	Max. load capacity	Closing force **	for fire and smoke protection doors **
Floor spring UTS			
UTS 85	300 kg	2 - 5 / 3 - 6	F
UTS 42	120 kg	1 - 4	-
UTS 50/60	120 / 170 kg	3 / 4	-
UTS 840 *	120 kg	3 and 4	-

* only for double action swing doors
** Size to EN 1154

G.U-BKS ACCESS – Electronic Access Control

Two system variants to meet particular security requirements:
– **Stand-alone card system** for individual doors
– **Networked system** for complex security zones

- Door release via :
  - Key pad (PIN code)
  - Card reader
  - Biometric fingerprint reader (networked)
- Simple operation
- Numerous setting functions, e.g. for time zones, access areas, access groups, individual access, visitor management, security patrols
- Usable in combination with electromechanic locks, escape door systems and automatic door drives, all supplied by the G.U Group

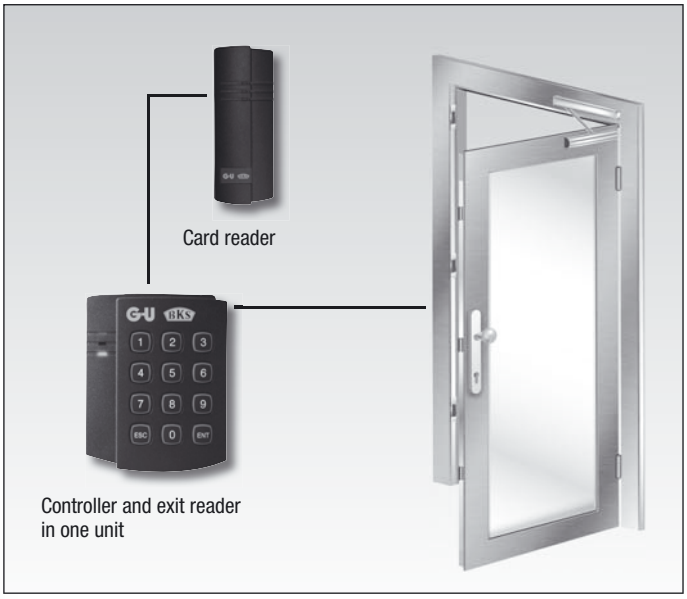

Escape Route Security

Combined with electrically locking panic locks, the FTNT10 escape door control system from G.U-BKS offers efficient protection against misuse of escpape doors whilst providing unrestricted burglar inhibition.

Escape door control system FTNT10

- Control unit with integral emergency button
- Unambiguous signalling
- Compatible with many customary wall switch programmes
- Approved in accordance with EltVTR
- Easy installation, start-up and and servicing
- G.U-BKS NET interface

Electrically locking panic lock EVP

- Self-locking locks of Series 21 for timber and steel doors, and Series 19 for narrow stile doors
  - Latch of electric lock is ideally integrated in the panic lock case (rather than being located at a separate locking point)
  - Reduced number of system components
  - Planner and fabricator-friendly lock system

Automatic Entrance Systems

GU Automatic sliding door systems offer functionality, cost-effectiveness and security wherever they are applied. Based on microprocessor-controlled drive units with small installation height, the comprehensive delivery programme provides convenient and barrier-free entrance solutions. Slim frame profiles emphasise the sophisticated door design.
All door systems are TÜV-tested (German Technical Supervisory Association) for the use with emergency and escape routes!

Sliding doors

- Creation of fine entrances with slim drive units
- User-friendly opening and closing

Telescopic sliding doors

- Large passage areas even in restricted structural openings
- Stylish appearance due to slim frame profiles

Curved sliding doors

- For entrances with sophisticated architecture
- Slim drive unit with integral safety sensors

Prismatic sliding doors

- Passage convenience combined with impressive entrance design
- Available in any angle from 90° to 179°

Swing Door Drives

Drive units for single and double leaf swing doors, suitable for the installation in all locations. Safe and simple operation. Easy retrofitting of manual doors in the course of renovation. Suitable for the use with fire and smoke protection doors. A drive variant for infloor assembly is also part of the programme.

- Low-noise operation
- Suitable for exterior and interior doors
- Easy assembly, start-up and maintenance
- Integrated function selection switch with LED indication
- Mechanic release from hold-open position
- Adjustable wind pressure function
- Dynamic adaptation of hold open time
- Connection of motor driven lock, SECURY A-opener, electric door opener and safety sensors possible
- Slot for radio receiver card
- Rugged case in fashionable G.U-BKS design

Revolving Door Systems

Revolving doors are suitable for a large variety of applications. Meeting individual demands in dimensions and design, they provide functional building entrances with efficient protection against noise and air draught.

Revolving doors

- Operation: manual or with fully automatic drive system
- Convenient and safe passage due to 3 or 4-chamber system
- Individual creative solutions for sophisticated building architecture
- Innovative door design, e.g., all glass assemblies with glass roof and infloor drive

Security Doors

Security revolving doors and security interlocked curved sliding doors for all areas where a high degree of security is required, e.g. in banks, ministries, computer centres.

- Controlled admission of authorised persons via integral electronic access control system
- Protection of main and side entrances without additional staff

All-Glass Sliding Partitions

Partition wall systems allow for individual applications in commercial buildings, banks and shop in shop areas in shopping centres.

Manual and fully automatic all-glass sliding partitions

- Variable room division
- Separation of areas to create representative show rooms
- Unlimited creative solutions according to requirements due to linear, curved or segmented variants
- Convenient opening and closing at the push of a button or manual operation – all at the customer‘s option

G.U-BKS NET

The management system G.U-BKS NET interconnects our electro-mechanical systems by means of modern bus communication, thus ensuring the automatic interplay of different functions.

Its modern system structure comprises centralised system configuration as well as centralised system monitoring.

The bus system allows for controlling and visualising a great number of mechatronical products via interface connection to the facility management system GEMOS.

GEMOS – Security System Solutions for Buildings and Facilities

The facility and security management system GEMOS integrates all mechatronic and electronic equipment items of a building, whereby the focus is put on security installations. The web-based management interface not only allows to monitor and administer all integrated systems in a truly reliable manner, but also controls the interplay of facility equipment items of different trades.

- G.U-BKS NET
- Fire detection systems
- Intrusion alarm systems
- Facility management systems
- I/O Module
- Communication systems
- Video systems
- Access control systems
- Reception desk systems
- Escape door control systems
- Perimeter systems
- Emergency alarm systems
- UGM
- Smoke and heat exhaust vent systems

Thanks to its versatility, GEMOS enables the customised, efficient and convenient implementation of facility-specific requirements. Moreover, the Gretsch-Unitas Group of Companies offers all relevant services such as engineering, installation, and, of course, project maintenance. A large number of international references from various application areas attest to the performance ability of this integrative approach..

Data Services and Software Programmes

The services provided by the Gretsch-Unitas Group of Companies comprise a range of information, planning, administration and ordering tools:

Tendering Service

- Internet based module for the creation of complex specification clauses in the formats: Word / Excel / Gaeb81 / Gaeb82, with integrated Gaeb import function

CIS – Customer Information System

- Internet-based customer information and ordering system including availability check, order tracking and invoice archive.

MKS – MasterKeySystem

- Internet-based platform for planning and ordering master key systems

KeyManager

- Professional software for administering, recording and programming mechanic and mechatronic master key systems

ConfiGUrator

- Internet-based product finder and configuring software for the calculation of hardware sets and parts lists, and the provision of quotations. Applicable for the product divisions Windows, Doors and Entrance Systems.

Hardware Data Service

- Determination of individual hardware solutions and supply of data for CNC based window fabrication

Notes

Gretsch-Unitas GmbH
Baubeschläge
D-71252 Ditzingen
Phone +49 (0)7156 301-0
Fax +49 (0)7156 301-293
www.g-u.com

As a specialist manufacturer of hardware and ventilators, Gretsch-Unitas have been, for many years, the brand leader in several product areas.
The market acceptability of the wide ranging product programme of builder's hardware and ventilators with up-to-date technology and design is proved in daily competition.

BKS GmbH
Postfach 10 02 10
D-42502 Velbert
Phone +49 (0)2051 201-0
Fax +49 (0)2051 201-555
www.g-u.com

The BKS name has been synonymous with security for more than one hundred years.
The traditional Velbert company brings proven products and an outstanding reputation – earned through undisputed product quality – to the Gretsch-Unitas Group.

FERCO International S.A.S.
F-57401 Sarrebourg
Phone +33 (0)3 87 23 31 11
Fax +33 (0)3 87 03 54 06
www.ferco.fr

FERCO INTERNATIONAL is France's largest and most widely used builder's hardware supplier.
The extensive programme of modern hardware is distributed world wide.

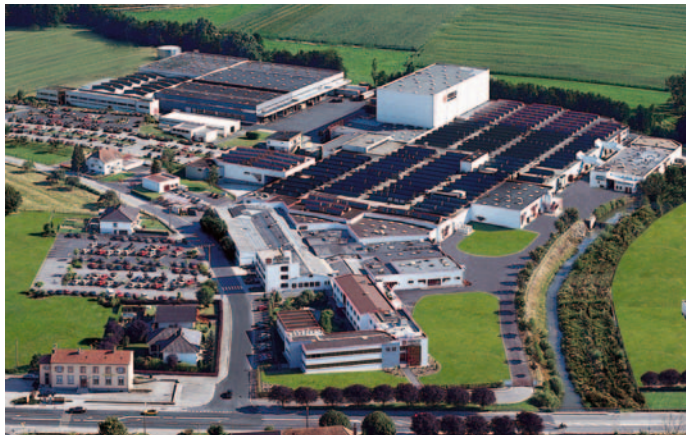

GU Automatic GmbH
Stahlstraße 8
D-33378 Rheda-Wiedenbrück
Phone +49 (0)5242 924-0
Fax +49 (0)5242 924-100
www.g-u.com

The business range "entrance systems" encloses projection, production, distribution, assembly and service of automatic door installations.
With GU Automatic the G.U Group extends the supply of system solutions for windows, internal and external doors as well as for façades.

Gretsch-Unitas GmbH
Baubeschläge
Johann-Maus-Str. 3
D-71254 Ditzingen
Phone +49 (0)7156 301-0
Fax +49 (0)7156 301-293

BKS GmbH
Heidestr. 71
D-42549 Velbert
Phone +49 (0)2051 201-0
Fax +49 (0)2051 201-555

WP00040-04-1-1 – 09.10 – Printed in Germany